City of Apopka
Planning Commission
Meeting Agenda
April 09, 2019
5:30 PM @ CITY COUNCIL CHAMBERS

CALL TO ORDER

If you wish to appear before the Planning Commission, please submit a “Notice of Intent to Speak” card to the Recording Secretary.

OPENING AND INVOCATION

APPROVAL OF MINUTES:

1. Approve minutes of the Planning Commission meeting held March 12, 2019

PUBLIC HEARING:

1. Rezoning, Overlay District and Master Plan, aka The Reserve at Kelly Park

SITE PLANS:

1. Preliminary Development Plan - Avian Pointe Parcel "A"
2. Subdivision Plat - Center Point Retail Apopka

OLD BUSINESS:
NEW BUSINESS:
ADJOURNMENT:

****

All interested parties may appear and be heard with respect to this agenda. Please be advised that, under state law, if you decide to appeal any decision made by the City Council with respect to any matter considered at this meeting or hearing, you will need a record of the proceedings, and that, for such purpose, you may need to ensure that a verbatim record of the proceedings is made, which record includes a testimony and evidence upon which the appeal is to be based. The City of Apopka does not provide a verbatim record.

In accordance with the American with Disabilities Act (ADA), persons with disabilities needing a special accommodation to participate in any of these proceedings should contact the City Clerk's Office at 120 East Main Street, Apopka, FL 32703, telephone (407) 703-1704, no less than 48 hours prior to the proceeding.

MINUTES OF THE PLANNING COMMISSION REGULAR MEETING HELD ON MARCH 12, 2019, AT 5:30 P.M. IN THE CITY COUNCIL CHAMBERS, APOPKA, FLORIDA.

MEMBERS PRESENT: James Greene, Linda Laurendeau, William Gusler, Mary Norwood, and John Sprinkle

ABSENT: Robert Ryan, Butch Stanley, Orange County Public Schools (Non-voting)

STAFF PRESENT: James Hitt, FRA-RA – Community Development Director, David Moon, AICP - Planning Manager, Joseph Byrd – City Attorney, Pamela Richmond, AICP – Senior Planner, Jean Sanchez – Planner II, Phil Martinez – Planner I, and Jeanne Green – Recording Secretary.

OTHERS PRESENT: Peter Pensa, Mike Tolson, Roberto Rodriguez, Reena Caprario, Mike Teufel, Patti Teufel, Jason Henderson, Judy Henderson, Don Sabiston, Marion Sabiston, Brittany Adkins, Shelby Young, James Young, Teresa Sargeant, Amanda Robbie, and Jeffrey Gray.

OPENING AND INVOCATION: Mr. Greene called the meeting to order and asked for a moment of silent prayer. The Pledge of Allegiance followed.

APPROVAL OF MINUTES: Chairperson Greene asked if there were any corrections or additions to the regular meeting minutes of February 12, 2019, at 5:30 p.m.

Motion: **Linda Laurendeau made a motion to approve the Planning Commission minutes from the regular meeting held on February 12, 2019, at 5:30 p.m. and seconded by John Sprinkle. Aye votes were cast by James Greene, Linda Laurendeau, William Gusler, Mary Norwood, and John Sprinkle (5-0).**

LEGISLATIVE – COMPREHENSIVE PLAN – SMALL SCALE – FUTURE LAND USE AMENDMENT – MARY F. REID ESTATE - Chairperson Greene stated this is a request to find the proposed Future Land Use amendment consistent with the Comprehensive Plan and compatible with the character of the surrounding area; and recommend approval of the change of Future Land Use Designation from "County" Commercial (Max. FAR 1.5) to "City" Commercial (Max. 0.25 FAR), subject to the findings of the staff report for the property owned by the Mary F. Reid Estate and located at 1506 Rock Springs Road.

Staff Presentation: Phil Martinez, Planner I, stated this is a request to find the proposed Future Land Use amendment consistent with the Comprehensive Plan and compatible with the character of the surrounding area; and recommend approval of the change of Future Land Use Designation from "County" Commercial (Max. FAR 1.5) to "City" Commercial (Max. 0.25 FAR), subject to the findings of the staff report for the property owned by the Mary F. Reid Estate and located at 1506 Rock Springs Road. The applicant is AVID Group, Peter Pensa, AICP. The existing use is a vacant single family residence. The existing zoning is "County" A-1 and the proposed zoning is "City" PUD (Planned Unit Development). The maximum allowable development is 43,451 sq. ft. of commercial space. The tract size is 3.99 +/- acres. The applicable code is the 1993 Land Development Code.

The subject parcel was annexed in the City on March 6, 2019 via Ordinance No. 2713. Presently, the subject parcels do not have a "City" future land use designation or a "City" zoning classification assigned. The applicant is requesting a Small-Scale Future Land Use Amendment to change the future land use designation from "County" Commercial to "City" Commercial to facilitate the development of a four (4) lot commercial development on the property. A rezoning request to PUD (Planned Unit Development) is currently being processed and will be presented for City Council consideration at a yet to be determined date.

Site development cannot exceed the intensity allowed by the Future Land Use policies. Planning & Zoning staff has determined that the following policies support a Commercial FLUM designation at the subject site.

Future Land Use Element - Policy 3.1.i, Commercial: Primary uses shall be for business, commerce, and convenience shopping which may be neighborhood or community oriented. The maximum floor area ratio shall be 0.25 gross floor area. Institutional land uses of less than five acres; and public facilities or utilities of less than five acres. The expansion of strip commercial areas shall be prohibited except in infill areas.

School capacity determination is not necessary for this proposed future land use amendment as the request is to allow a Commercial future land use designation on the subject property. No residential development is proposed as part of this application.

The JPA requires the City to notify the County 30 days before any public hearing or advisory board. The City properly notified Orange County on January 25, 2019.

The Development Review Committee found the proposed Small-Scale Future Land Use Amendment from "County" Commercial to "City" Commercial consistent with the Comprehensive Plan and compatible with the character of the surrounding areas, and recommends approval of the proposed Future Land Use Designation of Commercial for the property owned by Mary Reid Estate, and located north of West Welch Road and west of Rock Springs Road.

Staff recommended the Planning Commission find the proposed Small-Scale Future Land Use Amendment consistent with the Comprehensive Plan and compatible with the character of the surrounding areas; and to recommend approval of the change of Future Land Use Designation from "County" Commercial to "City" Commercial, subject to the findings of the Staff Report for the property owned by Mary Reid Estate, and located north of West Welch Road and west of Rock Springs Road.

This item is considered legislative and establishes general policy. The staff report and its findings are to be incorporated into and made a part of the minutes of this meeting.

Peter Pensa, AVID Group, stated he represented the owners, supported the staff report, and was available to answer any questions.

Chairperson Greene opened the meeting for public hearing. With no one wishing to speak, Chairperson Greene closed the public hearing.

Motion: **Linda Laurendeau made a motion to find the proposed Future Land Use amendment consistent with the Comprehensive Plan and compatible with the character of the surrounding area; and recommend approval of the change of Future Land Use Designation from "County" Commercial to "City" Commercial, subject to the findings of the Staff Report for the property owned by Mary Reid Estate, and located north of West Welch Road and west of Rock Springs Road. Motion seconded by William Gusler. Aye votes were cast by James Greene, Linda Laurendeau, William Gusler, Mary Norwood, and John Sprinkle (5-0). (Vote taken by poll.)**

QUASI-JUDICIAL – FINAL DEVELOPMENT PLAN – LAKE GEM LOT 6 – Chairperson Greene stated this is a request to find the proposed Final Development Plan consistent with the Comprehensive Plan and the 1993 Land Development Code; and recommend approval of the Lake Gem Lot 6 Final Development Plan for the property owned by Property Industrial Enterprises, LLC, c/o Michael R. Cooper and located at 605 Gem Commerce Court.

Chairperson Greene asked if there were any affected parties in attendance that wished to speak. No one spoke.

Chairperson Greene asked if the Commission members had any ex parte communications to divulge regarding this item.

Staff Presentation: Jean Sanchez, Planner II, stated this is a request to find the proposed Final Development Plan consistent with the Comprehensive Plan and the 1993 Land Development Code; and recommend approval of the Lake Gem Lot 6 Final Development Plan. The owner/applicant is Property Industrial Enterprises, LLC, c/o Michael R. Cooper. The property is located at 605 Gem Commerce Court. The engineer is Ken Ehlers, P.E. The future land use is Industrial and the zoning is PUD (Planned Unit Development/I-1). The existing use is vacant land and the proposed use is industrial in nature. The proposed building size is 7,490 sq. ft. The proposed Floor Area Ratio is 0.20 with a maximum of 0.60. The tract size is 0.83 +/- acre(s) or a total of 36,080 square feet. The applicable code is the 1993 Land Development Code.

The Lake Gem Commerce Center Lot 6 Final Development Plan is a Site Plan proposing a 7,490 square foot, one-story building comprised of 6,545 square feet of warehousing uses and 945 square feet for office uses. Located within the PUD/I-1 zoning district, Lot 6 contains 0.83 acres. Lake Gem Commerce Center complies with the development standards for the I-1 zoning district but allows for a building height of up to 50-feet, subject to all

other standards within PUD Ordinance No. 2447.

The minimum setbacks applicable to this project are:

Setback	Min. Standard
Front*	25’
Side	10’
Rear	10’*
Corner	25’

*30-foot setback from residential uses or zoning districts.

Ingress/egress access points for the development will be via the spine road, Gem Commerce Court with full access onto Marshall Lake Road. The Land Development Code requires 17 parking spaces, while the Site Plan provides 19 spaces, including one ADA-compliant space.

A transportation impact analysis (TIA) was conducted for the Lake Gem Industrial Park to assess the impacts of the total project on the surrounding roadway segments and intersections within a one-mile radius of the project per the City’s adopted TIA methodology. Marshall Lake Building Lot 10 is one of twelve lots located in the 90,000 square feet Lake Gem Industrial Park project, representing about 8% of the total project. Included in the analysis were segments of Bradshaw Road, Marshall Lake Road, and West 1st Street. The intersection of Bradshaw Road and Lake Marshall Road along with the site entrance were also analyzed.

The Lake Gem Industrial Park project will generate 627 daily trips and 87 P.M. Peak Hour trips. Marshall Lake Building Lot 10 will generate 52 daily trips and 7 P.M. Peak Hour Trips. The addition of the project trips for the entire Lake Gem Industrial Park to the study roadways will not cause the Level of Service (LOS) to fall below the City’s adopted LOS. The intersection of Bradshaw Road and Marshall Lake Road and the site entrance will operate at acceptable Levels of Service with the addition of project generated traffic.

The stormwater management system includes an on-site retention area on the western portion of the Lake Gem Commerce Park. The stormwater pond design has been previously reviewed under the Lake Gem Commerce Park and meets the City’s Land Development Code requirements.

A mixture of Loblolly Pines and Magnolias are planted within the 25-foot wide landscaped buffer provided along Gem Commerce Court. A Loblolly Pine tree is provided in the parking landscape island, which is a minimum of 8-feet in width and matches the length of the adjacent parking spaces.

The County was notified at the time of the subdivision plan and plat for this property through the DRC agenda distribution.

The Development Review Committee finds the final development plan consistent with the 1993 Land Development Code and recommends approval of the Lake Gem Lot 6 Final Development Plan subject to the findings of this staff report.

Staff recommended the Planning Commission find the Lake Gem Lot 6 Final Development Plan consistent with the Comprehensive Plan and Land Development Code; and to recommend approval of the Lake Gem Lot 6 Final Development Plan, subject to the findings of this staff report for the property owned by Property Industrial Enterprises, LLC, c/o Michael R. Cooper and located at 605 Gem Commerce Court.

The role of the Planning Commission is to advise the City Council to approve, deny, or approve with conditions based on consistency with the Comprehensive Plan and Land Development Code.

This item is considered quasi-judicial. The staff report and its findings are to be incorporated into and made a part of the minutes of this meeting.

Chairperson Greene opened the meeting for public hearing. With no one wishing to speak, Chairperson Greene closed the public hearing.

Motion: **John Sprinkle made a motion to find the proposed Final Development Plan consistent with the Comprehensive Plan and the 1993 Land Development Code; and recommend approval of the Lake Gem Lot 6 Final Development Plan for the property owned by Property Industrial Enterprises, LLC c/o Michael R. Cooper and located at 605 Gem Commerce Court. Motion seconded by William Gusler. Aye votes were cast by James Greene, Linda Laurendeau, William Gusler, Mary Norwood, and John Sprinkle (5-0). (Vote taken by poll.)**

QUASI-JUDICIAL – FINAL DEVELOPMENT PLAN – LAKE GEM LOT 12 – Chairperson Greene stated this is a request to find the proposed Final Development Plan consistent with the Comprehensive Plan and the 1993 Land Development Code; and recommend approval of the Lake Gem Lot 12 Final Development Plan for the property owned by Property Industrial Enterprises, LLC, c/o Michael R. Cooper and located at 755 Gem Commerce Court.

Chairperson Greene asked if there were any affected parties in attendance that wished to speak. No one spoke.

Chairperson Greene asked if the Commission members had any ex parte communications to divulge regarding this item.

Staff Presentation: Ms. Sanchez stated this is a request to find the proposed Final Development Plan consistent with the Comprehensive Plan and the 1993 Land Development Code; and recommend approval of the Lake Gem Lot 12 Final Development Plan. The owner/applicant is Property Industrial Enterprises, LLC, c/o Michael R. Cooper. The property is located at 755 Gem Commerce Court. The engineer is Ken Ehlers, P.E. The future land use is Industrial and the zoning is PUD (Planned Unit Development/I-1). The existing use is vacant land and the proposed use is industrial in nature. The proposed building size is 7,490 sq. ft. The proposed Floor Area Ratio is 0.19 with a maximum of 0.60. The tract size is 0.91 +/- acre(s) or a total of 39,640 square feet. The applicable code is the 1993 Land Development Code.

The Lake Gem Commerce Center Lot 12 Final Development Plan is a Site Plan proposing a 7,490 square foot, one-story building with 5,600 square feet for warehousing uses and 250 square feet office uses. Located within the PUD/I-1 zoning district, Lot 12 contains 0.91 acres. Lake Gem Commerce Center complies with the development standards for I-1 zoning district but allows for a building height of up 50-feet subject to all other standards within PUD Ordinance No. 2447.

The minimum setbacks applicable to this project are:

Setback	Min. Standard
Front*	25’
Side	10’
Rear	10’*
Corner	25’

*30-foot setback from residential uses or zoning districts.

Ingress/egress access points for the development will be via the spine road, Gem Commerce Court with full access onto Marshall Lake Road. The Land Development Code requires 19 parking spaces, while the Site Plan provides 20 spaces, including one ADA-compliant space.

A transportation impact analysis (TIA) was conducted for the Lake Gem Industrial Park to assess the impacts of the total project on the surrounding roadway segments and intersections within a one-mile radius of the project per the City’s adopted TIA methodology. Marshall Lake Building Lot 10 is one of twelve lots located in the 90,000 square foot Lake Gem Industrial Park project, representing about 8% of the total project. Included in the analysis were segments of Bradshaw Road, Marshall Lake Road, and West 1st Street. The intersection of Bradshaw Road and Lake Marshall Road along with the site entrance were also analyzed.

The Lake Gem Industrial Park project will generate 627 daily trips and 87 P.M. Peak Hour trips. Marshall Lake Building Lot 10 will generate 52 daily trips and 7 P.M. Peak Hour Trips. The addition of the project trips for the entire Lake Gem Industrial Park to the study roadways will not cause the Level of Service (LOS) to fall below the City’s adopted LOS. The intersection of Bradshaw Road and Marshall Lake Road and the site entrance will operate

at acceptable Levels of Service with the addition of project generated traffic.

The stormwater management system includes an on-site retention area on the western portion of the Lake Gem Commerce Park. The stormwater pond design has been previously reviewed under the Lake Gem Commerce Park and meets the City's Land Development Code requirements.

A mixture of Loblolly Pines, Sabal Palms and Japanese Blueberries are planted within the 25-foot wide landscaped buffer provided along Gem Commerce Court. A Japanese Blueberry tree is provided within the parking landscape island, which is a minimum of 8-feet in width and matches the length of the adjacent parking spaces.

The County was notified at the time of the subdivision plan and plat for this property through the DRC agenda distribution.

The Development Review Committee found the final development plan consistent with the Land Development code; and recommended approval of the Lake Gem Lot 12 Final Development Plan subject to the findings of this staff report.

Staff recommended the Planning Commission find the Lake Gem Lot 12 Final Development Plan consistent with the Comprehensive Plan and Land Development Code; and to recommend approval of the Lake Gem Lot 12 Final Development, subject to the findings of this staff report for the property owned by Property Industrial Enterprises, LLC c/o Michael R. Cooper and located at 755 Gem Commerce Court.

The role of the Planning Commission is to advise the City Council to approve, deny, or approve with conditions based on consistency with the Comprehensive Plan and Land Development Code.

This item is considered quasi-judicial. The staff report and its findings are to be incorporated into and made a part of the minutes of this meeting.

Chairperson Greene opened the meeting for public hearing. With no one wishing to speak, Chairperson Greene closed the public hearing.

Motion: **John Sprinkle made a motion to find the proposed Final Development Plan consistent with the Comprehensive Plan and the 1993 Land Development Code; and recommend approval of the Lake Gem Lot 12 Final Development Plan for the property owned by Property Industrial Enterprises, LLC c/o Michael R. Cooper and located at 605 Gem Commerce Court. Motion seconded by William Gusler. Aye votes were cast by James Greene, Linda Laurendeau, William Gusler, Mary Norwood, and John Sprinkle (5-0). (Vote taken by poll.)**

QUASI-JUDICIAL – FINAL DEVELOPMENT PLAN EXCEPTION – RE•NEW•AL CHURCH – Chairperson Greene stated this is a request to find the proposed Final Development Plan consistent with the Comprehensive Plan and the 1993 Land Development Code; and recommend approval of the Re•New•Al Church Final Development Plan for the property owned by Donald J. Sabiston located at 2335 Appy Lane.

Chairperson Greene asked if there were any affected parties in attendance that wished to speak. No one spoke.

Chairperson Greene asked if the Commission members had any ex parte communications to divulge regarding this item.

Staff Presentation: David Moon, AICP, Planning Manager, stated this is a request to find the proposed Final Development Plan consistent with the Comprehensive Plan and the 1993 Land Development Code; and recommend approval of the Re•New•Al Church Final Development Plan. The owner/applicant is Faithfull Creations, LLC, c/o Donald Sabiston, P.E. The property is located at 2335 Appy Lane. The engineer is Tri3 Civil Engineering Design Studio, Inc. c/o Constance D. Silver, P.E., LEED AP. The future land use is Residential Very Low Suburban and the zoning is Agriculture-Estates (AG-E). The existing use is a single family residence and the proposed use is a religious institution/church. The proposed building size is 10,400 sq. ft. with a Floor Area Ratio of 0.08. The tract size is 4.96 +/- acres or a total of 216,255 +/- square feet. The applicable code is the 1993 Land Development Code.

The Renewal Church Final Development Plan is a Site Plan proposing a building 10,400 square feet in size for a church/institutional use. On June 26, 2018, the Planning Commission approved a Special Exception on this site for a church use in a residential zoning district. An amendment to the Special Exception was approved on February 12, 2019.

The minimum setbacks applicable to this project, and as approved by the Special Exception are:

Setback	Min. Standard
Front	45'
Side	35’
Rear	50’

A total of 161 parking spaces are required and proposed including seven ADA-compliant and van accessible spaces. Full access to the site will be provided on Appy Lane. Per the Land Development Code, a transportation impact analysis (TIA) was not required for this development as it generates under 400 daily trips. The stormwater management system includes an on-site retention area on the northern most portion of the site. The stormwater pond design meets the requirements of the City’s Land Development Code.

There are 15-foot wide landscaped bufferyards adjacent to the western, eastern and southern boundary lines. Bufferyards include Magnolias, Live Oaks and Red Cedars placed at minimum of every 30 feet on-center. The Special Exception requires a split rail fence with a continuous hedge, at least 36-inches in height at the time of planting along the eastern and western boundaries, as shown on the landscape plans. Cathedral Live Oaks are provided within parking lot landscaped islands.

The County was notified at the time of the Site Plan review for this property through the DRC agenda distribution.

The Development Review Committee finds the site plan consistent with the Land development Code and Special Exception and recommends approval of the Renewal. Church Final Development Plan subject to the Conditions of Use for Special Exception - SPX18-01, and the findings of this staff report.

Staff recommended the Planning Commission find the Renewal Church Final Development Plan consistent with the Comprehensive Plan and Land Development Code; and to recommend approval of the Final Development Plan, subject to the Conditions of Use for Special Exception - SPX18-01, and the findings of this staff report.

The role of the Planning Commission is to advise the City Council to approve, deny, or approve with conditions based on consistency with the Comprehensive Plan and Land Development Code.

This item is considered quasi-judicial. The staff report and its findings are to be incorporated into and made a part of the minutes of this meeting.

Chairperson Greene opened the meeting for public hearing. With no one wishing to speak, Chairperson Greene closed the public hearing.

Motion: **Linda Laurendeau made a motion to find the Renewal Church Final Development Plan consistent with the Comprehensive Plan and Land Development Code; and recommend approval of the Final Development Plan, subject to the Conditions of Use for Special Exception SPX18-01 and the findings of this staff report for the property owned by Donald J. Sabiston located at 2335 Appy Lane. Motion seconded by William Gusler. Aye votes were cast by James Greene, Linda Laurendeau, William Gusler, Mary Norwood, and John Sprinkle (5-0). (Vote taken by poll.)**

OLD BUSINESS:

Land Development Code Amendment: James Hitt, FRA-RA, Community Development Director, announced that City Council adopted the amended Land Development Code on March 6, 2019. The consultant, Clarion Associates, LLC, are in the process of making some minor changes to the Code. Once complete the Code will be sent to Municode for codification. The next step will be to convert the current zoning map with the zoning

designations adopted in the new Code. Once that is complete, the amended zoning map will be presented to the Planning Commission for recommendation to the City Council. Then to City Council for adoption.

Mr. Moon added that because there are applications that were submitted before the new Code was adopted, staff will be including a notation on staff reports submitted to the Planning Commission and City Council indicating which code will apply to that particular project.

Americans with Disabilities Act (ADA): Joseph Byrd, City Attorney, stated that upon further research it has been verified that the Building Codes, and staff's interpretation, are consistent with the statutory requirements for ADA compliance.

In response to a question by Mr. Gusler, Mr. Byrd stated that currently the state statutes follow the 2010 ADA Code. Until the State adopts the 2012 ADA Code, the City is in compliance.

NEW BUSINESS: None.

ADJOURNMENT: The meeting was adjourned at 5:49 p.m.

_____
James Greene, Chairperson

_____
James K. Hitt, FRA-RA
Community Development Director

CITY OF APOPKA
PLANNING COMMISSION

X	PUBLIC HEARING	MEETING OF:	April 9, 2019
	SITE PLAN	FROM:	Community Development
	SPECIAL REPORTS	EXHIBITS:	Vicinity Map
X	OTHER: Final Development Plan		Aerial Map
			Ordinance No. 2717
			Master Plan

SUBJECT: **CHANGE OF ZONING, ASSIGNMENT OF KPC NEIGHBORHOOD OVERLAY DISTRICT, AND MASTER PLAN – THE RESERVE AT KELLY PARK SUBDIVISION**

REQUEST: **RECOMMEND APPROVAL OF THE CHANGE OF ZONING FROM CITY R-1AAA (SINGLE FAMILY RESIDENTIAL DISTRICT) TO CITY KPI-MU (KELLY PARK INTERCHANGE MIXED USE)**

SUMMARY:

OWNER(S):	Min Sun Cho, Hong S. Kim and Deok H. Kim
APPLICANT:	Surrey Homes, LLC c/o Christian M. Swann, President
ENGINEER:	Stantec c/o Giovanna Zapata, P.E.
LOCATION:	4068, 4046, 4022 Plymouth Sorrento Road
PARCEL I.D. NUMBERS:	13-20-27-0000-00-058, 13-20-27-0000-00-019, 13-20-27-0000-00-020, and 13-20-27-0000-00-021
EXISTING USE:	Single Family Residence and Nursery
FLUM DESIGNATION:	Mixed Use Interchange
CURRENT ZONING:	R-1AAA (Single Family Residential District)
PROPOSED DEVELOPMENT:	61 Single Family Residential Units

DISTRIBUTION

Mayor Nelson	Finance Director	Public Services Director
Commissioners	HR Director	Recreation Director
City Administrator	IT Director	City Clerk
Community Development Director	Police Chief	Fire Chief

PROPOSED ZONING: Kelly Park Interchange Mixed-Use (KPI-MU); Neighborhood Overlay

TRACT SIZE: 19.97 +/- acres

LAND DEVELOPMENT CODE: 1993 Land Development Code

RELATIONSHIP TO ADJACENT PROPERTIES:

Direction	***Future Land Use***	***Zoning***	***Present Use***
North (County)*	Rural	A-2	Vacant
East	Public Right-of-Way (ROW)	ROW	Plymouth Sorrento Road
South (City)	Rural	A-2	Single Family Residences
West (County)	Rural	A-1	Single Family Residences

* Annexation application is proceeding to City Council hearings for the parcel abutting to the north.

PROJECT DESCRIPTION/SUMMARY: The applicant is requesting a rezoning of approximately 20 acres of property from City R-1AAA (Single Family Residential District) to Kelly Park Interchange Mixed-Use (KPI-MU), with a Neighborhood character zone to develop a single-family residential subdivision subject to the requirements of the Kelly Park Interchange Form Based Code. The subject property is comprised of four parcels and is located on the northwest corner of Plymouth Sorrento Road and Appy Lane, approximately three-quarters of a mile east of the intersection of Kelly Park Road and Plymouth-Sorrento Road. The Master Plan proposes development of the property with a total of 61 single-family homes on 50-foot and 55-foot by 110-foot wide lots with a minimum living area of 1500 square feet. There are no minimum and maximum lot size and living area requirements in the Form-Based Code. The Master Plan design of the proposed subdivision is in accordance meets the intent of the Kelly Park Interchange Form Based Code, and the Neighborhood character zone, which primarily allows single-family homes as permitted uses. The surrounding properties consist of single-family residential and agricultural uses.

Access to the site is proposed via Plymouth Sorrento Road. A 6-foot tall precast or masonry wall will be located within the 25-foot wide landscaped bufferyard adjacent to Plymouth Sorrento Road. A 30-foot wide right-of-way dedication is provided adjacent to the landscaped buffer on Plymouth Sorrento Road and a 25-foot wide right-of-way dedication is also provided on the southernmost portion of the project side for future access and connection of properties to the south. The stormwater pond is located in the western portion of the site. In accordance with the requirements of the Form Based Code, Over 20 percent of the total site area, 4.33 acres, are dedicated to open space. Common recreation elements include Tracts R, open space area abutting the stormwater pond on the eastern portion of the site, Tract S for a park on the eastern part of the project and an internal trail system.

Two roadway connections will be provided to allow cross-access to the property to the north and south at such time these properties develop. The developer will provide a 10-foot wide bike trail along the Street

"B" to facilitate the construction of the regional trail system that is proposed within the Kelly Park Form-Based Code area.

Orange County government requested the reservation of thirty feet along the eastern property line to accommodate right-of-way needs for the future widening of Plymouth Sorrento Road from two lanes to a four-lane divided road. Also, Applicant provides a twenty-five foot-wide landscape buffer next to this right-of-way land dedication.

Development Profile:

No. of residential lots:	61 single family homes, detached
Minimum lot width:	50-feet and 55-feet
Minimum lot depth:	110 feet
Minimum lot size:	5,500 square feet (FBC has no minimum)
Minimum house livable area:	1,500 square feet (FBC has no minimum)
Setbacks:	
Front:	15-feet minimum; 30-feet maximum
Rear:	15-feet; 15-feet on Lot 22 and Lot 23
Side:	5-feet
Parking:	Two space per home within the lot (enclosed or exterior; FBC does not require enclosed parking)

In accordance with the requirements of the Kelly Park Interchange Form-Based Code, the owner has submitted a Master Plan in conjunction with the rezoning application detailing the development of 61 single-family homes on approximately 19.97 acres. The property is located within the one-mile radius from the SR 429/Kelly Park Road interchange.

DEVELOPMENT AND ZONING CONDITIONS OF APPROVAL: That the zoning classification of the following described property be designated as Kelly Park Interchange Mixed-Use (KPI-MU), Neighborhood Overlay, as defined in the Kelly Park Interchange Form-Based Code, and with the following provisions:

1. Development of the property is subject to the requirements of the Kelly Park Interchange Form Based Code, Neighborhood Overlay District/character zone.
2. The architectural design of the buildings must be consistent with Section K.2.g, and Appendix A of the Kelly Park Interchange Form-Based Code.
3. A 25-foot wide right-of-way dedication on the southern boundary for future access and connection of Appy Lane.
4. A 30-foot wide right-of-way dedication for future expansion of Plymouth Sorrento Road.
5. A 10-foot wide bike trail will be constructed along Street "B" to facilitate the construction of a regional trail system. (Policy 20.19, FLUE; Sec. Q, FBC). The trail shall be placed in a tract.
6. Perpetual easements dedicated to the City of Apopka shall be provided over the internal pedestrian pathways and trail networks to allow public access.
7. A minimum living area of 1,500 square feet shall be provided.

COMPREHENSIVE PLAN COMPLIANCE: The proposed use of the property is consistent with the Mixed-Use Interchange Future Land Use designation and is consistent with the Kelly Park Interchange

Form-Based Code.

SCHOOL CAPACITY REPORT: A School Capacity Enhancement Agreement has been approved by the Orange County Public Schools. No development activity shall occur on the subject property until the developer has obtained a school concurrency mitigation agreement or letter from OCPS.

ORANGE COUNTY NOTIFICATION: Pursuant to Section 7 of the Joint Planning Area Agreement, Orange County was notified on March 7, 2019.

PUBLIC HEARING SCHEDULE:

April 9, 2019	Planning Commission (5:30 pm)
April 17, 2019	City Council (7:00 pm) - 1st Reading
May 1, 2019	City Council (1:30 pm) - 2nd Reading

RECOMMENDATION ACTION:

The **Development Review Committee** finds the proposed rezoning to Kelly Park Interchange Mixed-Use (KPI-MU), and assignment of Neighborhood Overlay District consistent with the Comprehensive Plan and Kelly Park Interchange Form-Based Code, and recommends approval of The Reserve at Kelly Park Master Plan, subject to the conditions of approval and this staff report.

Recommended Motion: Find the proposed zoning, overlay district and Master Plan consistent with the Comprehensive Plan and Land Development Code; and recommend approval of the rezoning of the subject parcels from "City" R-1AAA to Kelly Park Interchange Mixed-Use (KPI-MU), approval of the Neighborhood Overlay District, and approval of the Master Plan, subject to the conditions of approval and this staff report.

Planning Commission Role: The role of the Planning Commission for this development application is to advise the City Council to approve or deny based on consistency with the Comprehensive Plan and Land Development Code.

Note: This item is considered quasi-judicial. The staff report and its findings are to be incorporated into and made a part of the minutes of this meeting.

Project Name:	**The Reserve at Kelly Park Master Plan**
Owner(s):	**Min Sun Cho, Hong S. Kim and Deok H. Kim**
Engineer:	**Stantec c/o Giovanna Zapata (Martinez), P. E.**
Parcel I.D. No(s):	**13-20-27-0000-00-058, 13-20-27-0000-00-019, 13-20-27-0000-00-020, and 13-20-27-0000-00-021**
Address(es):	**4068, 4046, 4022 Plymouth Sorrento Road**
Total Acres:	**19.97 +/- Acre(s)**

VICINITY MAP

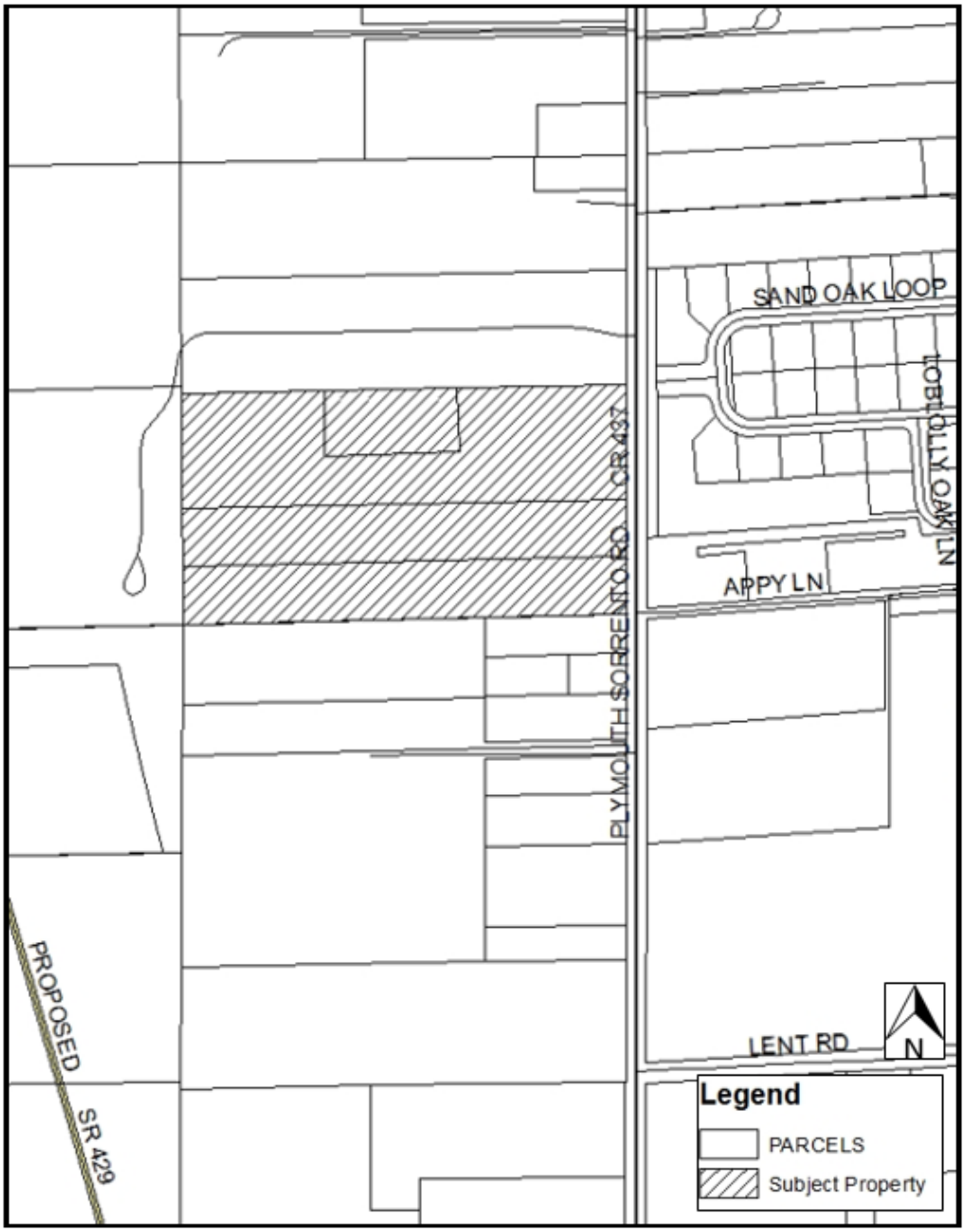

AERIAL MAP

Apopka Nursery
Cho Min Sun
Subject Properties
437
TRACT J
Sand Oak Lo
TRACT B
Appy Ln
Plymouth Sorrento Rd
N

RESERVE AT KELLY PARK

MASTER PLAN
CITY OF APOPKA

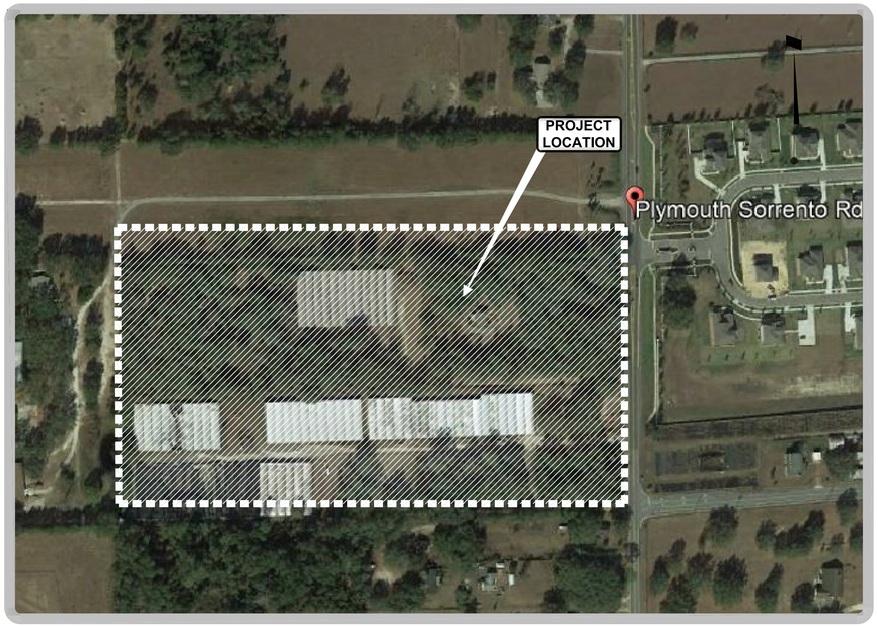

PROJECT LOCATION MAP

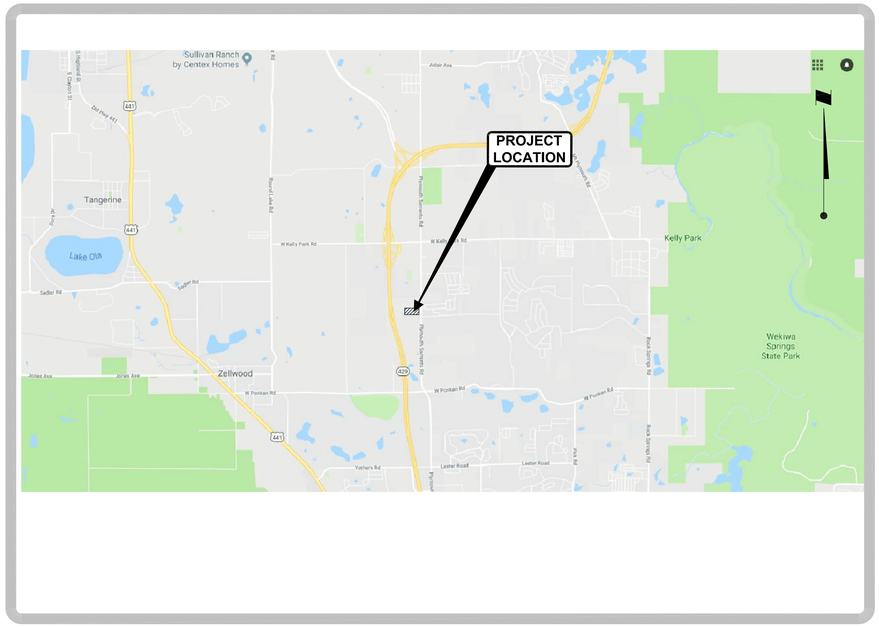

VICINITY MAP

TABLE OF DRAWINGS	
SHEET	DESCRIPTION
1	COVER SHEET
2	GENERAL NOTES
3	MASTER PLAN
4	CONCEPTUAL AMENITIES PLAN

PLANS PREPARED FOR:

SURREY HOMES, LLC
558 West New England Avenue
Suite 240
Winter Park, FL 32789

PROJECT CONTACTS:

Civi Engineerl: STANTEC CONSULTING SERVICES, INC.
4798 NEW BROAD ST. SUITE 100
ORLANDO, FL 32814
CONTACT: LARRY T. RAY, P.E.
PHONE: (407) 541-0199
EMAIL: LARRY.RAY@STANTEC.COM

Landscape & Irrigation: KIRKWOOD DESIGN, LLC
1308 FALCON DRIVE
ORLANDO, FL 3280
PHONE: (407) 415-5389
RKIRKWOOD@BELLSOUTH.NET

Geotechnical Engineer:: YOVAISH ENGINEERING SERVICES, LLC
953 SUNSHINE LANE
ALTAMONTE SPRINGS, FL 32714
PHONE: (407) 774-9383
FAX: (407) 478-8978

24 x 36 jvhernandez 19 March 2019 3:50pm V:\215\active\215614951 - Reserve @ Kelly Park\civil\drawing\CAD\Master Plan\SHEETS\COVER SHEET.dwg Layout = COVER SHEET
Copyright Stantec. All ideas, designs, arrangements, and plans represented by this drawing are owned by and are property of Stantec, and were created for the exclusive use of the qualified project. These ideas, designs, arrangements or plans shall not be used by, or disclosed to any person, firm, or corporation without the written permission of Stantec.

Stantec
4798 New Broad Street, Suite 100, Orlando, FL 32814-6436
www.stantec.com (407) 425-0200

MASTER PLAN

RESERVE AT KELLY PARK
Stantec Project ID: 215614951

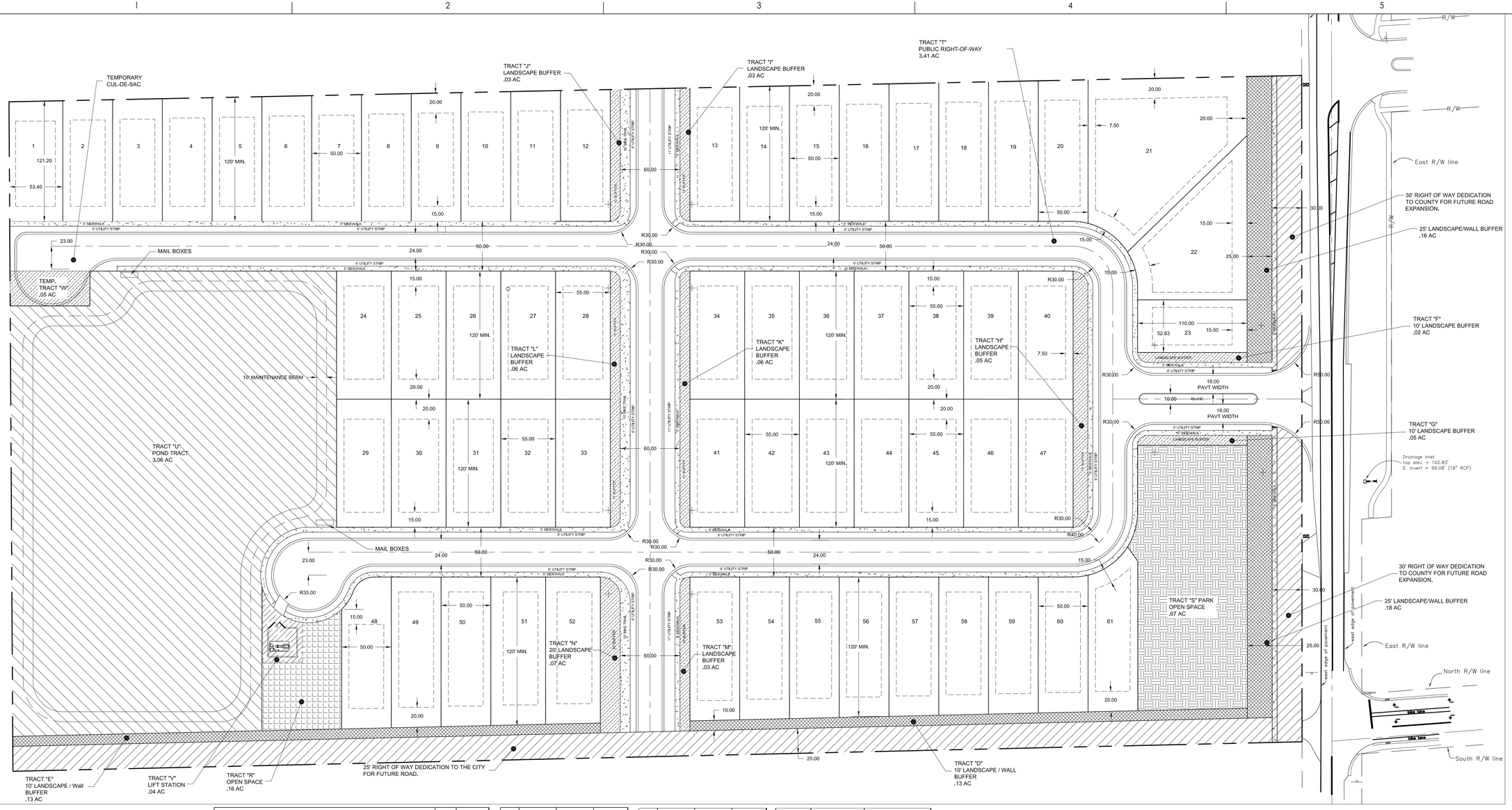

LEGEND

- PARCEL BOUNDRY
- LOT LINES
- SETBACKS
- RIGHT OF WAY DEDICATION
- LANDSCAPE/WALL BUFFER
- LANDSCAPE BUFFER
- TRACT "S" PARK OPEN SPACE
- TRACT "R" OPEN SPACE
- LIFTSTATION TRACT
- TRACT "U" POND OPEN SPACE

OPEN SPACE CALCULATIONS		Acres	% of Total
Total Gross Area		19.97	
Right of Way		1.12	
Total Net Area - ROW		18.85	
Open Space Required		3.77	
Proposed Open Space			
	Tract S - Park	0.67	16%
	Landscape Buffer	1.20	28%
	Tract R	0.17	4%
	Stormwater Pond Tract (75% * 3.06 Ac.)	2.29	53%
Total Open Space Provided		4.33	

TRACT OWNERSHIP

TRACT	DESCRIPTION	AREA (A	AREA (SF)	OWNER
TRACT 'D'	10' LANDSCAPE BUFFER	0.13	5662.80	H.O.A.
TRACT 'E'	10' LANDSCAPE BUFFER	0.13	5662.80	H.O.A.
TRACT 'F'	10' LANDSCAPE BUFFER	0.02	871.20	CITY
TRACT 'G'	10' LANDSCAPE BUFFER	0.05	2178.00	H.O.A.
TRACT 'H'	15' LANDSCAPE BUFFER	0.05	2178.00	H.O.A.
TRACT 'I'	10' LANDSCAPE BUFFER	0.03	1306.80	H.O.A.
TRACT 'J'	10' LANDSCAPE BUFFER	0.03	1306.80	H.O.A.
TRACT 'K'	10' LANDSCAPE BUFFER	0.06	2613.60	H.O.A.
TRACT 'L'	10' LANDSCAPE BUFFER	0.06	2613.60	H.O.A.
TRACT 'M'	10' LANDSCAPE BUFFER	0.03	1306.80	H.O.A.
TRACT 'N'	20' LANDSCAPE BUFFER	0.07	3049.20	H.O.A.
TRACT 'R'	OPEN SPACE	0.16	6969.60	H.O.A.
TRACT 'S'	PARK	0.67	29185.20	H.O.A.
TRACT 'T'	PUBLIC RIGHT-OF-WAY BUFFER	3.41	148539.60	CITY
TRACT 'U'	POND TRACT	3.06	133293.60	H.O.A.
TRACT 'V'	LIFT STATION	0.04	1742.40	CITY

Lot #	Depth (ft.)	Width (ft.)	Area (sf.)
1	121.2	53.4	6472.08
2	121.68	50	6084.00
3	122.64	50	6132.00
4	123.7	50	6185.00
5	124.77	50	6238.50
6	125.69	50	6284.50
7	126.71	50	6335.50
8	127.73	50	6386.50
9	128.93	50	6446.50
10	129.72	50	6486.00
11	130.88	50	6544.00
12	131.85	50	6592.50
13	134.44	50	6722.00
14	135.45	50	6772.50
15	136.69	50	6834.50
16	137.69	50	6884.50
17	138.52	50	6926.00
18	139.6	50	6980.00
19	140.76	50	7038.00
20	141.5	50	7075.00
21	144.29	50	20171.89
22	109.99	50	12433.94
23	110	50	5500.00
24	128.62	55	7074.10
25	128.62	55	7074.10
26	128.62	55	7074.10
27	128.62	55	7074.10
28	128.62	55	7074.10
29	128.62	55	7074.10
30	128.62	55	7074.10
31	128.62	55	7074.10
32	128.62	55	7074.10
33	128.62	55	7074.10
34	128.62	55	7074.10
35	128.62	55	7074.10
36	128.62	55	7074.10
37	128.62	55	7074.10
38	128.62	55	7074.10
39	128.62	55	7074.10
40	128.62	55	7074.10
41	128.62	55	7074.10
42	128.62	55	7074.10
43	128.62	55	7074.10
44	128.62	55	7074.10
45	128.62	55	7074.10
46	128.62	55	7074.10
47	128.62	55	7074.10
48	151.24	50	7562.00
49	150.82	50	7541.00
50	149.59	50	7479.50
51	148.36	50	7418.00
52	147.56	50	7378.00
53	144.15	50	7207.50
54	142.8	50	7140.00
55	141.64	50	7082.00
56	139.99	50	6999.50
57	139.34	50	6967.00
58	138.23	50	6911.50
59	137.08	50	6854.00
60	135.92	50	6796.00
61	145.66	50	7283.00

Lot Width	Number of Lots	Percentage of Total
50'	34	56%
55'	24	39%
53.4'	1	2%
Flag	2	3%

VARIANCE OR WAIVER REQUEST

CODE #	CODE REQUIREMENT	(V/W)	REQUEST	JUSTIFICATION
KELLY PARK INTERCHANGE FORM-BASED CODE	20' MIN.	VARIANCE	MIN. REAR SETBACK ON LOTS 22 & 23 TO BE 15'	MIN. REQ. REAR SETBACK ON LOTS 22 & 23 CANNOT BE MAINTAINED WHILE KEEPING 61 LOTS DUE TO THE REQ. 30' ROW AND 25' LANDSCAPE BUFFER ALONG PLYMOUTH SORRENTO RD.

SITE DATA TABLE

PARCEL ID NUMBER	13-20-27-000-00-019, 13-20-27-0000-00-020, 13-20-27-0000-00-021, 13-20-27-0000-00-058	
FUTURE LAND USE	MIXED USE	
ZONING	KPI MU	
ADJACENT FUTURE LAND USE	NORTH: RURAL RES. VERY LOW SUBURBAN SOUTH: RES. VERY LOW SUBURBAN EAST: RES. VERY LOW SUBURBAN WEST: RURAL	
ADJACENT ZONING	NORTH: A-2, R-1AAA SOUTH: R-1AAA EAST: R1-AAA WEST: A-1	
ACREAGE/SQUARE FOOTAGE	8.30 Ac, 4.99Ac, 4.99 Ac, 1.69 Ac	
BUILDING HEIGHT	PROPOSED: 35 FT, MIN.	
BUILDING SETBACKS	PROPOSED: FRONT: 15 FT. MIN./ 30 FT. MAX. SIDE: 5 FT. REAR: 20 FT., 15 FT. ON LOTS 22 AND 23 CORNER: N/A REQUIRED: FRONT: 15 FT. MIN/ 30 FT. MAX. SIDE: 5 FT. REAR: 20 FT., 15 FT. ON LOTS 22 AND 23 CORNER: N/A	

NOTE:

1. A 6' PRECAST MASONRY WALL IS TO BE INSTALLED WITHIN A 25' LANDSCAPE/WALL BUFFER AND A 10' LANDSCAPE/WALL BUFFER ADJACENT TO THE EASTERN 30' ROW AND SOUTHERN 25' ROW RESPECTFULLY.

0 50' 100'

Stantec
Stantec Consulting Services Inc.
4770 Millenia Blvd. Suite 100
Orlando FL32814-4836
Tel: (407) 425-2500
www.stantec.com

The Contractor shall verify and be responsible for all dimensions. DO NOT scale the drawing - any errors or omissions shall be reported to Stantec without delay.
The Copyrights to all designs and drawings are the property of Stantec. Reproduction or use for any purpose other than that authorized by Stantec is forbidden.

Consultant

Revision	By	Appd	YYYY.MM.DD

Issued	By	Appd	YYYY.MM.DD

Permit/Seal

PRELIMINARY NOT FOR CONSTRUCTION

Not for permits, pricing or other official purposes. This document has not been completed or checked and is for general information or comment only.

Client/Project
SURREY HOMES, LLC
RESERVE AT KELLEY PARK
ORLANDO, FL 3280

Project No.: 215614951
File Name: MASTER PLAN
Scale: 1" = 50'

Dwn.	Dsgn.	Chkd.	YYYY.MM.DD

Title

Revision: Sheet: of
Drawing No.

ORIGINAL SHEET - ARCH D

A. Design Standards

1. LOT CRITERIA

Description	Single Family Detached 50' & 55' Lot (Front Loading)
Front/Side Street	Minimum: 15' Maximum: 30'
Rear	20' min. 15' on lots 22 & 23
Side	Minimum: 5' on lots 22 & 23 7.5' on all other lots
Garage	Recessed 4' min from Primary Front Façade
Min. Average Lot Area	5,500 SF
Min. Lot Width	50'
Min. Lot Depth	120' 110' on lots 22 & 23
Max. Lot Coverage	75%
Max. Building Height	35'/2 Stories
Min. Living Area	1,500 SF

(1) See Master Plan sheet for depiction of conceptual typical site plans.

(2) Front porch description per Kelly Park Interchange Form-Based Code Section K.2(g)(v).

(3) Front porch setback as allowed per notes on Table 6 per Kelly Park Interchange Form-Based Code Section J.1.

(4) Garage front setback as allowed per Kelly Park Interchange Form-Based Code Section K.2(g)(iv).

(5) The minimum side setback for the 55 foot lots shall be 7.5 feet. The minimum side setback for 50' lots shall be 5.0 feet.

B. Architectural, Buildings, and Accessory Structures

1. Architectural design shall meet the intent of City of Apopka Kelly Park Interchange Form-Base Code or unless otherwise stated.
2. All lots shall have detached single family homes.
3. Each individual single-family home shall have a minimum of two (2) bedrooms.
4. All lots shall have minimum two (2) car garages.
5. Mail delivery for all lots within The Reserve at Kelly Park shall occur at cluster mailbox units. Approval from the Postmaster of the location shall be submitted prior to approval of the Final Development Plan.
6. AC condenser units & similar equipment shall be placed in the rear yard area. Units shall be screened from side streets with landscaping or opaque fencing.
7. Storage sheds or similar storage facilities shall not be allowed.
8. Swimming pools shall be allowed.

1. Architectural Design Standards:
   a. Architectural styles shall be determined prior to Final Development Plan approval, and these shall meet the intent of the City of Apopka's Kelly Park Interchange Form-Based Code except as noted on these Development Standards. Modification or replacement of the exterior elevations can be approved by the Community Development Director if such changes represent equivalent architectural value. Substantial deviations from architectural rendering must be approved by City Council.
   b. From façade materials such as cultured stone veneer, stucco, & siding may be utilized to be consistent with the applicable Architectural Style.
   c. Minimum roof pitch over the main house and garage shall be 5/12. Roof pitch over porches shall be a minimum of 4/12.
   d. 30-year asphalt shingle shall be installed on all roofs. 3-tab shingles are prohibited. Single shingle color shall be used for uniformity throughout the community.
   e. Aluminum fascia and soffit shall be standard for all houses. Single Fascia and soffit color shall be used for uniformity throughout the community.
   f. Trim around windows and doors shall be painted a different color from the body of the house. Doors may be painted either the same as the trim or separate accent color.
2. Front Building Entrance Elevation Design Standards:
   a. Front building entrance shall feature a minimum 4' deep (per Kelly Park Interchange From-Base Code Section J.4 Figure 16) porches and porticos flush or projecting beyond front wall or similar feature. Porch widths shall be a minimum of 12' min and a clear height of 8' min.
   b. Front porches and porticos shall be at grade level.
   c. Identical model plan type shall not be constructed on neighboring lots who share a side yard property boundary line without a different elevation type.
   d. Identical exterior paint schemes shall not be applied on neighboring lots who share a side yard property boundary line.
   e. Specific elevations style types shall have similar wall finishes, window grid patterns, window banding & trim, roof lines and slopes, etc. Applied to each lot width model plan type front elevations.
   f. Modification or replacement of the exterior elevations can be approved by the Community Development Director if such changes represent equivalent architectural value. Substantial deviations from exterior elevations must be approved by City Council.
3. Individual Lot Front & Rear Yard Fencing Standards:
   a. Fencing is prohibited in front yards.
   b. Fencing along the side and rear property lines and returns shall be tan vinyl opaque style or aluminum grate style fencing.
   c. Maximum height of a fence shall be six (6) feet above final grade or six (6) inches below the community common wall height, whichever is less. No fence shall exceed the height of an abutting common area wall.
   d. Rear yard fences shall not project more than twenty feet (20') beyond rear side wall building corner.
   e. Fencing at street corner lot side yards shall be setback a minimum of ten (10) feet from the street side property line.

C. Utilities and Infrastructure

1. Water service shall be provided by the City of Apopka. The water system shall be designed to City of Apopka standards.
2. Reclaim water service shall be provided by the City of Apopka. The reclaim water system shall be designed to City of Apopka standards.
3. Stormwater management system shall be designed to comply with the design standards of the City of Apopka and St. Johns River Water Management District.
4. A final drainage report and soils report will be submitted with the Final Development Plan.
5. Sanitary service shall be provided by the City of Apopka. The sanitary system shall be designed to City of Apopka standards.
6. Utility easements shall be dedicated to the City of Apopka.
7. Drainage easements to be dedicated to the Home Owners' Association unless otherwise required by the City of Apopka.
8. All stormwater and utility pipes may be moved to save existing trees in the right-of-way. Any change in the location of these pipes will be shown on the Final Development Plan.
9. On-site streets are to be constructed per City of Apopka standards.
10. Stabilized access roadways and fire hydrants must be in place before building construction may begin.
11. Solid waste collection and public safety (police and fire) shall be provided by the City of Apopka.
12. The internal Street Type E (Neighborhood) right-of-way is to be public.
13. Five-foot (5') wide sidewalks are to be constructed adjacent to internal roads throughout the entire project in compliance with the City of Apopka Kelly Park Interchange Form-Base Code. Sidewalk alignment may be adjusted at final development plan to preserve existing trees.
14. Garages shall be accessed from the adjacent Street Type E (Neighborhood) at the front of the lot for all lots.
15. Power service within the development shall be underground. No overhead service will be allowed.
16. Vehicular, Pedestrian and Accent lighting shall substantially conform to the City of Apopka's Kelly Park Interchange Form-Base Code Section P.4(e).

B. Recreation and Open Space

1. Required project open space shall be a minimum of 20% of the developed site area in accordance with the City of Apopka Kelly Park Interchange Form-Base Code per Section Q Table 13.
2. Required project recreation shall be provided at a rate of 3.6 acres per 1,000 population with 2.6 population per dwelling unit.
3. A specific park site plan and amenities/equipment shall be provided with the Final Development Plan.

C. Buffers and Landscaping

1. A twenty-five-foot (25') buffer for entry wall and landscaping will be provided along Plymouth Sorrento Rd. This tract shall be dedicated to and maintained by the H.O.A. The design of this buffer tract shall follow the City of Apopka Kelly Park Interchange Form-Base Code Section M. Landscaping and Hardscape Plans shall be provided at Final Development Plan. Entry wall shall be a six-foot (6') tall precast masonry wall.

2. A ten-foot (10') buffer will be provided along the south 25 foot wide Right-of-Way (to be dedicated to City). This tract shall be dedicated to and maintained by the H.O.A. The design of this buffer tract shall follow the City of Apopka Kelly Park Interchange Form-Base Code Section M. Landscaping Plans shall be provided at Final Development Plan.

3. Landscape buffer tracts for landscaping will be provided adjacent to the sides of lots 12, 13, 23, 28, 33, 34, 40, 41, 47, 52, & 53. These tracts shall be dedicated to and maintained by the H.O.A. The design of this buffer shall follow the City of Apopka Kelly Park Interchange Form-Base Code Section M.

4. Entrance feature and community sign details will be provided with the Final Development Plan.

5. Final landscape plans for the buffer areas along the proposed main entrance at Plymouth Sorrento Rd. shall be provided with the Final Development Plan.

6. Tree Planting Conditions. Minimum of two (2) new trees shall be planted per residential lot. The new trees shall be a minimum of three inches (3") DBH at the time of planting and shall count toward the overall number of required tree replacement inches, if any. Trees within the Street Type E (Neighborhood) shall be medium canopy trees at 40' min. spacings, understory trees at 20' min. spacing per City of Apopka Kelly Park Interchange Form-Base Code Section P.3 Table 12.

7. Tree Protection Plan - The Final Development Plan shall include tree protection techniques to prevent harm to any trees designate to be preserved or encroachment into the protected natural areas, including but not limited to tree barricades, silt fencing, or other similar techniques accepted by the City Engineer.

F. Maintenance and Plat

1. The Reserve at Kelly Park Home Owners' Association will maintain common areas including all fences/walls and landscaping within said common areas.
2. The Final Development Plan shall include the plat document, and the plat shall be in final form.
3. The City of Apopka shall be responsible for maintenance of Street Type E (Neighborhood), street lighting, stormwater collection systems and utilities (potable water main, reclaimed water main, force main, etc.) within the public right-of-ways within The Reserve at Kelly Park.

G. Wetlands and Environmental

1. There is one (1) wetland area within the site. This is located on the northwest side of the property.
2. According to the FEMA Flood Insurance Rate Map for Orange County, FL, Panel No. 12095-C-0125-F, dated September 25, 2009 & 12095-C-0110F, dated September 25, 2009, the entire site of the proposed development is located within Zone X (areas determined to be outside the 500-year floodplain).
3. An erosion control plan will be submitted with the Final Development Plan.
4. Tree removal, tree replacement, and landscaping shall comply with the City of Apopka Kelly Park Interchange Form-Base Code Section M.
5. Individual lot arbor/clearing permit is required prior to clearing or grading of any lot or issuance of building permit. Placement of the house shall preserve existing trees to the greatest extent practical. Plot plan for each lot shall illustrate tree locations as presented within the Final Development Plan.

H. Development Condition Continuity

The KPI-MU Development Standards shall be printed within the KPU-MU Master Plan and the Final Development Plan.

I. Signage

Signage shall comply with the City of Apopka Kelly Park Interchange Form-Base Code.

J. Lighting

Lighting shall comply with the City of Apopka's Kelly Park Interchange Form-Base Code Section P.4(e). Street and parking area or pedestrian path light poles shall be decorative type. Details will be provided with the Final Development Plan.

K. Garbage Pickup

1. Front loaded single-family units to be picked up at the adjacent front right of way tract.

I. Miscellaneous

1. Any existing septic tanks or wells shall be properly abandoned prior to earthwork or construction. Permits shall be applied for and issued by the appropriate agencies.
2. All acreages are subject to change with final development plan and final plat review and approval.
3. Outdoor storage areas (boats, trailers, recreational vehicles, etc.) are not provided within the development and will be prohibited through the H.O.A. documents.

Stantec

Stantec Consulting Services Inc.
4798 New Broad Street Suite 100
Orlando FL 32814-6436
Tel: (407) 425-2500
www.stantec.com

The Contractor shall verify and be responsible for all dimensions. DO NOT scale the drawing - any errors or omissions shall be reported to Stantec without delay.
The Copyrights to all designs and drawings are the property of Stantec. Reproduction or use for any purpose other than that authorized by Stantec is forbidden.

Consultant

Revision | By | Appd | YYYY.MM.DD

Issued | By | Appd | YYYY.MM.DD

Permit/Seal

PRELIMINARY NOT FOR CONSTRUCTION

Not for permits, pricing or other official purposes. This document has not been completed or checked and is for general information or comment only.

Client/Project
SURREY HOMES, LLC

RESERVE AT KELLEY PARK

ORLANDO, FL 3280

Project No.: 215614951

File Name: GENERAL GENERAL NOTES

Scale:

Dwn. Dsgn. Chkd. YYYY.MM.DD

Title

Revision: Sheet: of

Drawing No.

v:\2156\active\215614951 - reserve @ kelly park\civil\drawing\cad\master plan\sheets\general notes
2019.03.19 3:56:24 PM

ORIGINAL SHEET - ARCH D

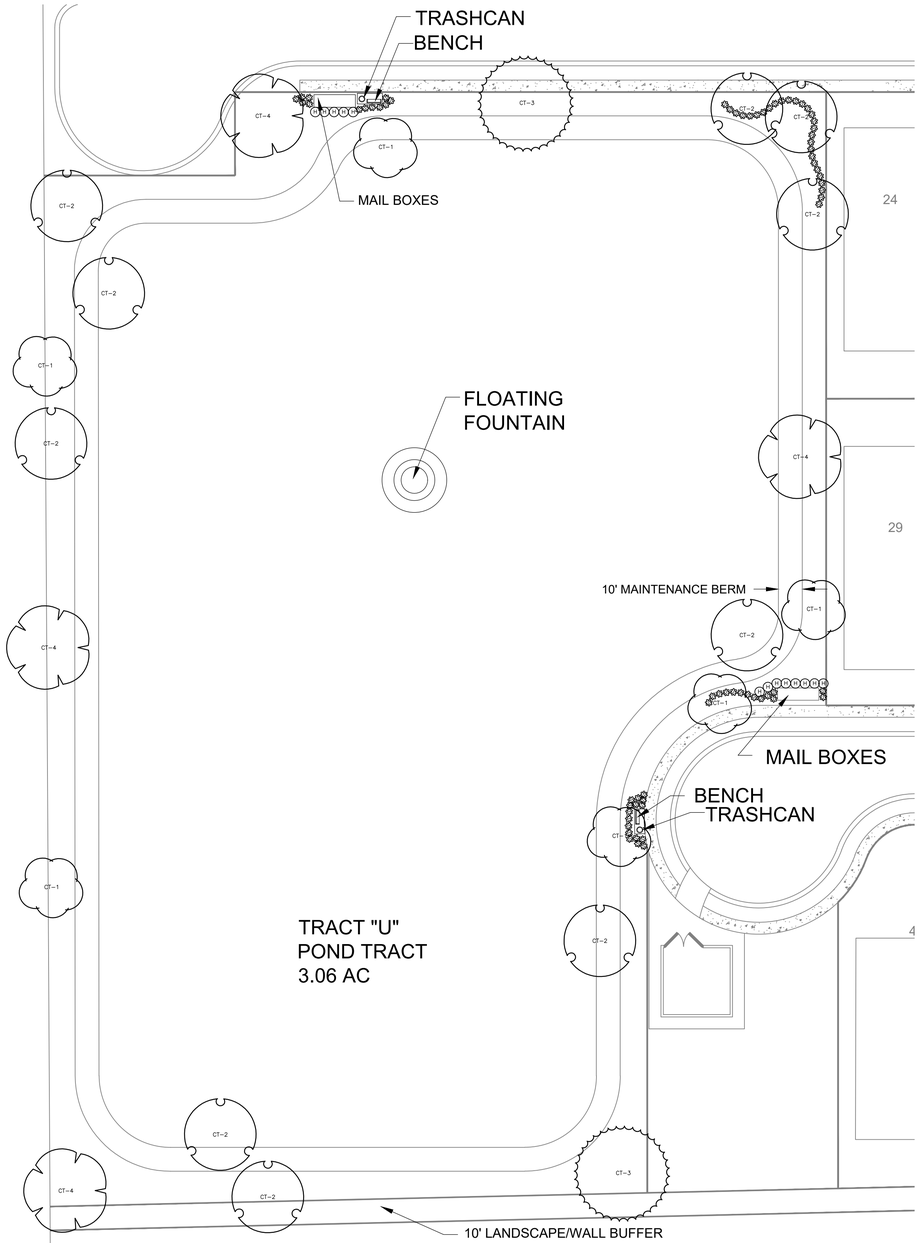

Pond Amenities Conceptual Layout
Scale: 1" = 30' @ 24X36

PLANT SCHEDULE POND AREA

TREES	CODE	BOTANICAL NAME / COM
	CT-1	Canopy Tree-1
	CT-2	Canopy Tree-2
	CT-3	Canopy Tree-3
	CT-4	Canopy Tree-4

SHRUBS	CODE	BOTANICAL NAME / COM
	S	Shrub-1
H	H	Shrub-2

North

0 15 30 60
SCALE: 1"= 30' @ 24x36

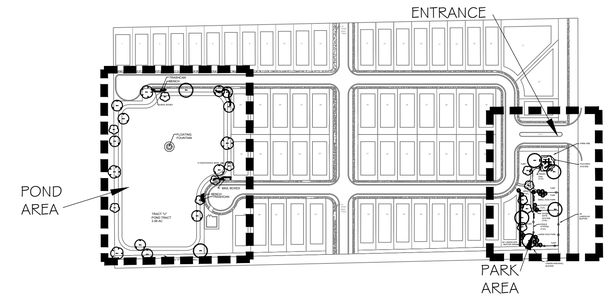

Park Amentities Conceptual Layout
Scale: 1" = 30' @ 24X36

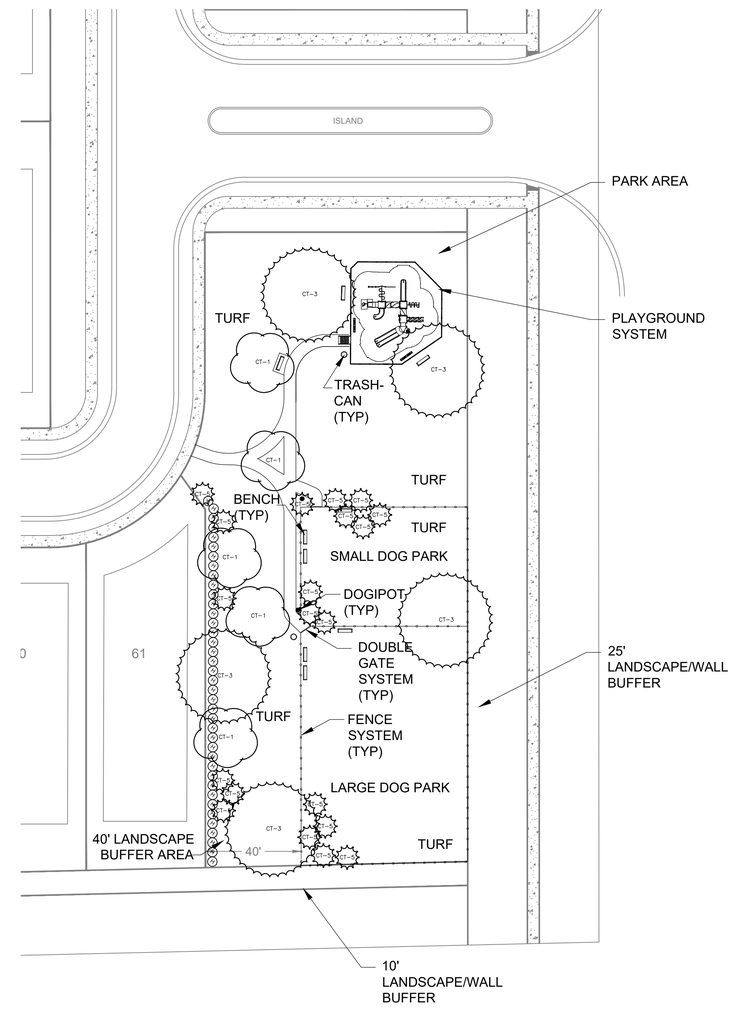

PLANT SCHEDULE PARK AREA

TREES	CODE	QTY	BOTANICAL NAME / COMMON NAME
	CT-1	5	Canopy Tree-1
	CT-3	5	Canopy Tree-3
	CT-5	20	Canopy Tree-5

SHRUBS	CODE	QTY	BOTANICAL NAME / COMMON NAME
H	H	39	Shrub-2

KIRKWOOD DESIGN, LLC
1308 Falcon Drive
Orlando, Fl. 32803
407.415.5389
rkirkwood@bellsouth.net.
Landscape Architecture - Land Planning
CERTIFICATE OF AUTHORIZATION: LC26000384

Project Name

THE RESERVE AT KELLY PARK
Amenities & Landscape Plan

APOPKA, FL

Date
MAR, 19, 2019

No.	Description	Date

Drawn:	Designed:	Checked:	Project No:
BLB	RK	RK	KD 17-037

Sheet Title
CONCEPTUAL AMENITIES PLAN

Seal

Sheet No.
LA-01

Randal D Kirkwood
FL RLA #1605

ORDINANCE NO. 2717

AN ORDINANCE OF THE CITY OF APOPKA, FLORIDA, CHANGING THE ZONING FROM "CITY" R-1AAA (RESIDENTIAL SINGLE-FAMILY DISTRICT) TO "CITY" KPI-MU (KELLY PARK INTERCHANGE MIXED-USE), AND ASSIGNING A KELLY PARK CROSSING INTERCHANGE AND NEIGHBORHOOD OVERLAY DISTRICTS, FOR CERTAIN REAL PROPERTY GENERALLY LOCATED ON THE NORTHEAST CORNER OF PLYMOUTH SORRENTO ROAD AND APPY LANE, COMPRISING 19.97 ACRES MORE OR LESS, AND OWNED BY MIN SUN CHO, HONG SIK KIM AND DEOK HWA KIM; PROVIDING FOR DIRECTIONS TO THE COMMUNITY DEVELOPMENT DIRECTOR, SEVERABILITY,CONFLICTS, AND AN EFFECTIVE DATE.

WHEREAS, to manage growth, the City of Apopka, Florida, finds it in the best interest of the public health, safety and welfare of its citizens to establish zoning classifications within the City; and

WHEREAS, Min Sun Cho, Hong Sik Kim and Deok Hwa Kim have requested a change in zoning on property as identified in Section II of this ordinance; and

WHEREAS, the subject property is located within the Kelly Park Interchange Form-Based Code Area; and

WHEREAS, if a site, or any portion of a site is located within a one mile radius of the interchange of Kelly Park Road and State Road 429, the entire site is subject to the form based standards contained within the Kelly Park Form-Based Code; and

WHEREAS, properties within the Kelly Park Interchange Form Based Code Area may be rezoned to the Kelly Park Interchange Mixed-Use (KPI-MU) zoning category; and

WHEREAS, in conjunction with the rezone of property to Kelly Park Interchange Mixed Use, an overlay designation to assign a character zone to the site must be requested; and

WHERAS, Min Sun Cho, Hong Sik Kim and Deok Hwa Kim requested a rezoning to Kelly Park Interchange Mixed-Use (KPI-MU) zoning, with the assignment of Interchange and Neighborhood character zones; and

WHEREAS, the proposed Kelly Park Interchange Mixed-Use (KPI-MU) zoning, and Interchange and Neighborhood character zones have been found to be consistent with the City of Apopka Comprehensive Plan, and the Kelly Park Interchange Form Based Code.

NOW THEREFORE, BE IT ORDAINED, by the City Council of the City of Apopka, Florida, as follows:

Section I. That the zoning classification of the following described property be designated as Kelly Park Interchange Mixed-Use (KPI-MU), Interchange and Neighborhood character zones as defined in the Kelly Park Interchange Form Based Code, and with the following Master Plan provisions:

1. Development of the property is subject to the requirements of the Kelly Park Interchange Form Based Code, Interchange and Neighborhood character zones.

2. The architectural design of the buildings must be consistent with Section K.2.g, and Appendix A of the Kelly Park Interchange Form Based Code.

3. A 10-foot wide bicycle trail will be constructed within the portion of the development adjacent to Street "B" as designated by the Master Plan to facilitate the construction of a regional trail system. (Policy 20.19, FLUE; Sec. Q, FBC). The trail shall be placed in an easement or tract.

4. Perpetual easements dedicated to the City of Apopka shall be provided over the internal pedestrian pathways and trail networks to allow public access.

5. A development agreement shall address the extension of utilities, dedication of rights-of-way, and public access to regional trail facilities.

Section II. That the zoning classification of the following described property, being situated in the City of Apopka, Florida, is hereby Kelly Park Interchange Mixed-Use (KPI-MU), Interchange and Neighborhood character zones as defined in the Kelly Park Interchange Form Based Code.

Property Description: Attachment "A"

Section III. That the zoning classification is consistent with the Comprehensive Plan of the City of Apopka, Florida.

Section IV. That the Community Development Director, or the Director's designee, is hereby authorized to amend, alter, and implement the official zoning maps of the City of Apopka, Florida, to include said designation.

Section V. That if any section or portion of a section or subsection of this Ordinance proves to be invalid, unlawful, or unconstitutional, it shall not be held to invalidate or impair the validity, force or effect of any other section or portion of section or subsection or part of this ordinance.

Section VI. That all ordinances or parts of ordinances in conflict herewith are hereby repealed.

Section VII. That this Ordinance shall take effect upon the date of adoption.

READ FIRST TIME: April 17, 2019

READ SECOND TIME
AND ADOPTED: May 1, 2019

_____
Bryan Nelson, Mayor

ATTEST:

_____
Linda Goff, City Clerk

DULY ADVERTISED FOR PUBLIC HEARING: March 22, 2019 and March 29, 2019

ATTACHMENT "A"

PROPERTY DESCRIPTION

(NOTE: HOMESTEAD PORTION OF FOLLOWING DESCRIBED PROPERTY) N1/2 OF S1/2 OF SE1/4 OF SE1/4 OF SEC 13-20-27 (LESS COUNTY RD) SEE 3810/0892

CONTAINS 361,541 SQUARE FEET OR 8.30 ACRES MORE OR LESS.
PARCEL ID NUMBER: 13-20-27-0000-00-019

AND

N1/2 OF S1/4 OF SE1/4 OF SE1/4 OF SEC 13-20-27

CONTAINS 217,438 SQUARE FEET OR 4.99 ACRES MORE OR LESS.
PARCEL ID NUMBER: 13-20-27-0000-00-020

AND

S1/8 OF SE1/4 OF SE1/4 SEC 13-20-27

CONTAINS 217,438 SQUARE FEET OR 4.99 ACRES MORE OR LESS.
PARCEL ID NUMBER: 13-20-27-0000-00-021

AND

(NOTE: AGRICULTURAL PORTION OF FOLLOWING DESCRIBED PROPERTY) N1/2 OF S1/2 OF SE1/4 OF SE1/4 OF SEC 13-20-27 (LESS COUNTY RD) SEE 3810/0892

CONTAINS 73,786 SQUARE FEET OR 1.69 ACRES MORE OR LESS.
PARCEL ID NUMBER: 13-20-27-0000-00-058

Property Owners: Min Sun Cho, Hong Sik Kim and Deok Hwa Kim
Total Area: 19.97 +/- Acres
Rezoning: From "City" R-1AAA (Residential Family District) to "City" KPI-MU (Kelly Park Interchange Mixed Use) and Neighborhood Overlay Districts
Parcel ID Numbers: 13-20-27-0000-00-019, -020, -021, -058

VICINITY MAP

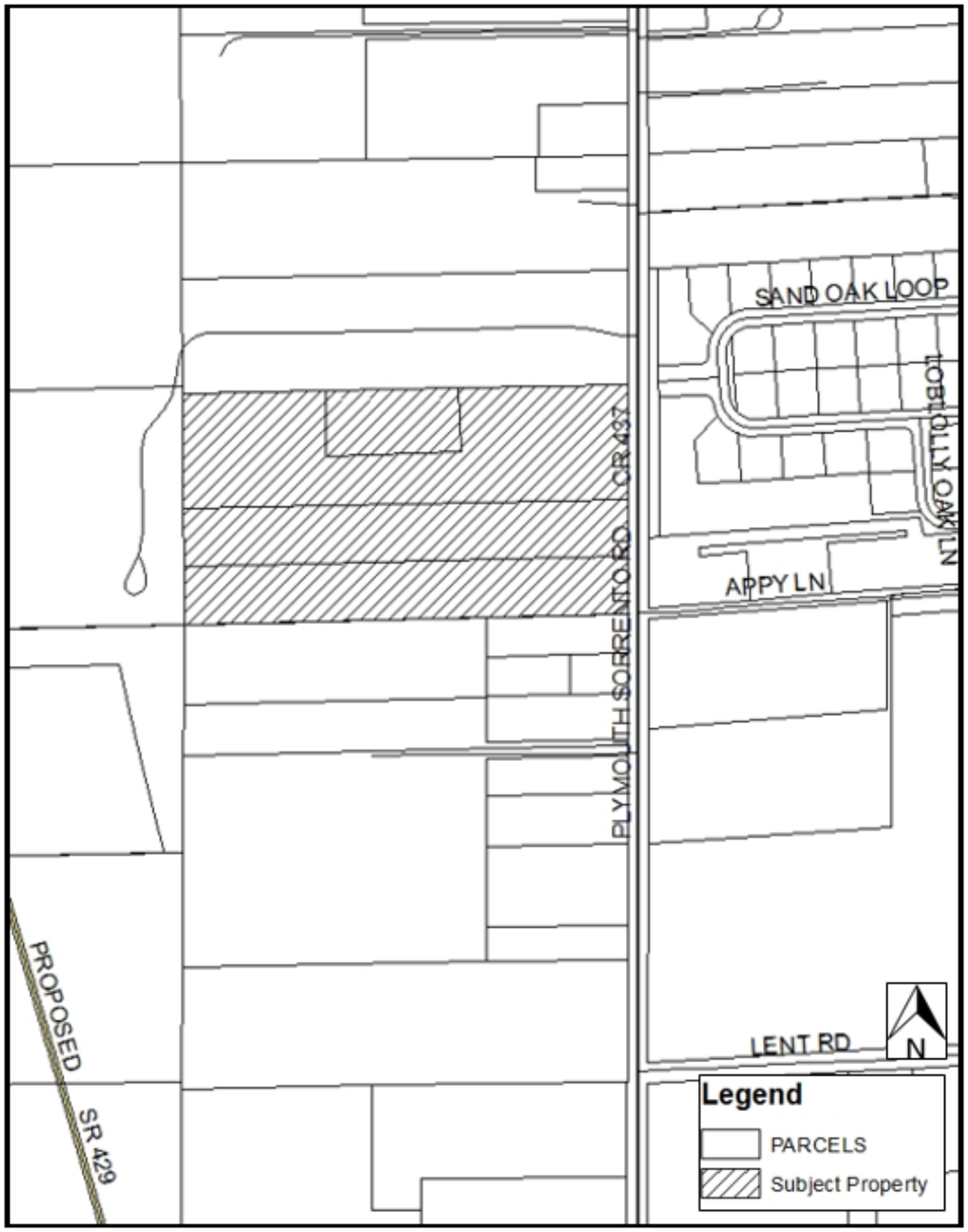

CITY OF APOPKA
PLANNING COMMISSION

___	PUBLIC HEARING	MEETING OF:	April 9, 2019
X	SITE PLAN	FROM:	Community Development
___	SPECIAL REPORTS	EXHIBITS:	Vicinity Map
X	OTHER: Preliminary Development Plan		Preliminary Dev. Plan
			Development Agreement
			PUD Master Plan

SUBJECT: **AVIAN POINTE PARCEL A – PRELIMINARY DEVELOPMENT PLAN**

REQUEST: **RECOMMEND APPROVAL OF THE AVIAN POINTE PARCEL A PRELIMINARY DEVELOPMENT PLAN**

SUMMARY:

OWNER:	Apopka Clear Lake Investments, LLC
APPLICANT:	NV5, Inc., c/o Jason P. Mahoney, P.E.
LOCATION:	Parcel A, Avian Pointe PUD - located south of Peterson Road and east of SR 429 and north of Clearwater Lake
PARCEL ID NUMBER:	07-21-28-0000-00-015
EXISTING USE:	Vacant
FLUM DESIGNATION:	Residential Low Density
CURRENT ZONING:	PUD (Planned Unit Development)
PROPOSED DEVELOPMENT:	56 single family homes
TRACT SIZE:	28.986 +/- acres
APPLICABLE LDC:	1993 Land Development Code Avian Pointe Planned Unit Development Master Plan (Ord. No.2671)

DISTRIBUTION

Mayor Nelson	Finance Director	Public Services Director
Commissioners	HR Director	Recreation Director
City Administrator	IT Director	City Clerk
Community Development Director	Police Chief	Fire Chief

RELATIONSHIP TO ADJACENT PROPERTIES:

Direction	***Future Land Use***	***Zoning***	***Present Use***
North (City) (County)	Mixed Use (0-5 du/ac) Rural	Mixed-EC (City) A-1 (County)	Vacant, Agricultural buildings and uses
East (City)	Low Density Residential (0-5 du/ac)	R-1AA	Clear Lake Estates subdivision
South (City)	Low Density Residential (0-5 du/ac);	R-1AA, R-1	Clearwater Lake
West (City)	Residential Medium Density	PUD	Parcel B – Avian Pointe PUD

Project Use: The applicant has submitted a Preliminary Development Plan detailing the development of 56 single-family units on 29.986 acres. The subject property is located on Parcel A within the Avian Pointe PUD, which is located north of Clearwater Lake and south of Peterson Road. The Avian Pointe PUD allows for the development of 758 residential units consisting of single-family, townhomes, and apartment units. Additional uses within the PUD includes a shared use recreation area, and a flex use parcel consisting of either a school or daycare facility, senior housing facility, or a 100 room boutique hotel. Consistent with the approved PUD Master Plan, lot widths of 60-feet and 75-feet are provided, and a minimum living area of 1,700 square feet for a single family home are required in the Parcel A development.

Access: Two ingress/egress access points for the development are located along Grand Avian Parkway. Grand Avian Parkway is the spine road that is detailed within the Avian Pointe PUD that connects Lust Road to Peterson Road and will allow road access to all proposed developments within the PUD. The internal roadway network of the proposed subdivision is comprised of 45-foot and 50-foot wide private rights-of-way. Vehicular and pedestrian connections are provided to the remainder of the PUD via Grand Avian Parkway.

Roads internal to Parcel "A" are private and owned and maintained by the Master Association. Grand Avian Parkway and the bike trail are located in public right-of-way and will be owned and maintained by the City from Lust Road to Peterson Road. The Avian Pointe development is not responsible for improvements to Peterson Street or King Street.

Stormwater: One tract for stormwater retention is located in the northeastern corner of the development behind lots 17-21. This pond will be constructed concurrent with the construction of Grand Avian Parkway.

Recreation: Consistent with the approved PUD Master Plan a community park and recreation area will be provided on Parcel B that will be owned and maintained by the master Avian Pointe homeowners association. Included within the recreation facility is a tot lot, restrooms, basketball courts, multi-purpose sports field, and parking area. This area will be accessed via Grand Avian Parkway.

Buffer/Tree Program: Consistent with the approved PUD Master Plan a 20-foot wide landscape buffer/open space tract is provided along the eastern side of the development to help buffer the proposed subdivision from the existing Clear Lake Estates subdivision to the east. Street trees will be provided that are spaced 25-30-feet on center.

Development Agreement
The below conditions setforth in the Avian Ponte Development Agreement and Transportation Agreement are applicable to Phase A of the Avian Pointe PUD Master Plan.

1. (Paragraph 3, D.A.) The Avian Pointe Master Association must be established prior to the issuance of the first building permit.
2. (Paragraph 7, D.A.) The Community Park, Phase 4-B, of the PUD, is not required to be completed until the issuance of the 220th residential building permit, or one year after the construction of the elementary school.
3. (Paragraph 8, D.A.) Clubhouse and pool within Phase B-1 must be completed prior to the issuance of the 125th building permit for the single family or townhome phases.
4. (Paragraph 11, D.A.). Developer shall submit a document for review by City staff demonstrating common design themes for utility and equipment located within common areas or private and public roadways, entrance features, including but not limited to decorative street light poles, street name them, and park benches\furniture. Entrance features and landscape plans for the road-about shall also be submitted for review by City staff. (Paragraph 11 requirements must be addressed prior to City approval of the Final Development Plan for Phase A.)
5. (Paragraph 12, D.A) Prior to issuance of the first residential building permit, Developer must submit a performance bond for the clubhouse\pool and the common park area improvements, and for the spine road and internal roads.

SCHOOL CAPACITY REPORT: A Capacity Enhancement Agreement was obtained from OCPS at the time of the rezoning application. School Concurrency must be satisfied prior to City Council approval of the Final Development Plan.

ORANGE COUNTY NOTIFICATION: The County was notified at the time of the subdivision plan and plat for this property through the DRC agenda distribution.

PUBLIC HEARING SCHEDULE:
April 9, 2019 - Planning Commission, 5:30 pm
May 1, 2019 - City Council, 1:30 pm

RECOMMENDATION ACTION:

The **Development Review Committee** finds the Preliminary Development Plan consistent with the Avian Pointe PUD Master Plan and recommends approval of the Avian Pointe Parcel A Preliminary Development Plan.

Recommended Motion: Find the Preliminary Development Plan consistent with the Avian Pointe PUD Master Plan and the Land Development Code, and recommend approval of the Avian Pointe Parcel A Preliminary Development Plan.

Planning Commission Role: The role of the Planning Commission for this development application is to advise the City Council to approve or deny based on consistency with the Comprehensive Plan and Land Development Code and PUD Master Plan.

Note: This item is considered quasi-judicial. The staff report and its findings are to be incorporated into and made a part of the minutes of this meeting.

Project: **AVIAN POINTE**
Owned by: **Apopka Clear Lake Investments, LLC**
Located: **South of Peterson Road and east of SR 429 and north of Clearwater Lake**
Parcel ID#: **07-21-28-0000-00-015**

N

VICINITY MAP

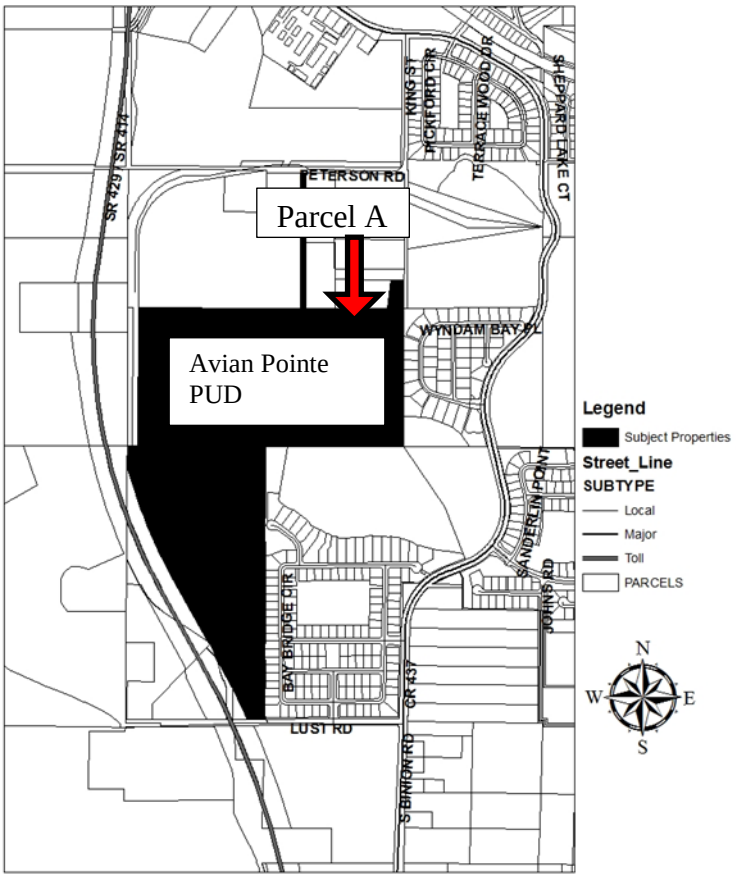

AERIAL MAP

N

429
W Orange Ave
Annie
Holts Lake
Heiniger Lake
Sheppard Lake
YMCA Camp Wewa
Mud Lake
Upper Lake Dos
Clear Water Lake
Maudedehelen Sub
Western Beltway
S Binion Rd
Plymouth
429

PRELIMINARY DEVELOPMENT PLAN
PARCEL A AT AVIAN POINTE

SITE CONSTRUCTION OFF GRAND AVIAN PARKWAY ROADWAY PROJECT

AT

PARCEL I.D. #
07-21-28-0000-00-015
APOPKA, FLORIDA

INDEX OF CONSTRUCTION PLANS

SHEET NO.	SHEET NAME
1	COVER SHEET
2	GENERAL NOTES
3	TYPICAL SECTIONS & GRADING DETAILS
4	MASTER LAYOUT AND GEOMETRY PLAN
5	SITE PLAN
6	PAVING AND GRADING PLAN
7 - 13	PLAN AND PROFILE SHEETS
14	GENERAL DETAILS
15	FIRE TRUCK ACCESS PLAN
16	UTILITY PLAN
17 - 20	UTILITY DETAILS
21	SEDIMENT AND EROSION CONTROL PLAN
22	SEDIMENT AND EROSION CONTROL DETAILS
23	STORMWATER POLLUTION PREVENTION PLAN
L1 - L2	LANDSCAPE PLANS

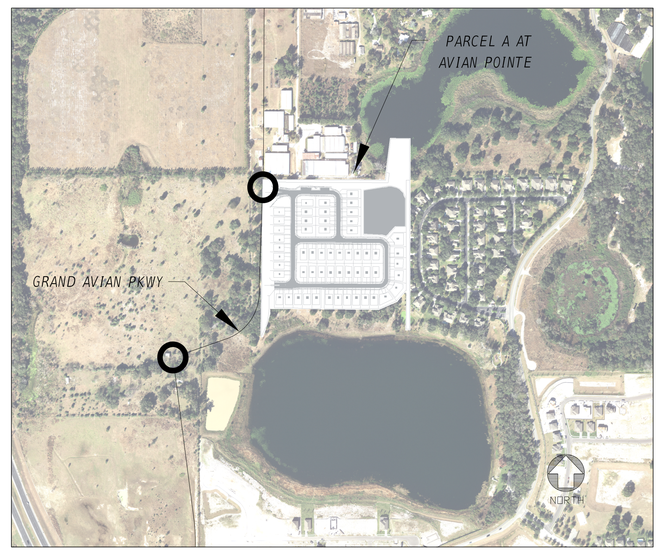

VICINITY MAP
NTS

CONSULTANTS

ENGINEER
NV5, INC.
201 SOUTH BUMBY AVENUE
ORLANDO, FLORIDA 32803
JUSTIN R. CHRISTENSEN, P.E.
407-896-3317

SURVEYOR
ALLEN & COMPANY
16 EAST PLANT STREE
WINTER GARDEN, FL. 34787
JAMES L. RICKMAN, P.L.S.
(407) 654-5355

LANDSCAPE
J. SCOTT LIBERTY
5621 REVELWOOD LOOP
WINTER PARK, FLORIDA 32792
407-719-2124

PROJECT DATA

PARCEL ADDRESS: 230 SOUTH BINION ROAD, APOPKA, FL 32703

PARCEL A - SITE DATA TABLE							
PARCEL ID NUMBER	07-21-28-0000-00-015						
FUTURE LAND USE	CURRENT:	LOW-RES		PROPOSE LOW-RES			
ZONING	CURRENT:	PD R-1		PROPOSE PD R-1			
ADJACENT LAND USE	NORTH:	LOW-RES	EAST: LOW-RES	SOUTH:	CONSERVATION	WEST:	MIXED USE
ADJACENT ZONING	NORTH:	A-1	EAST: R-1AA	SOUTH:	R-1	WEST:	PUD
ACREAGE /SQUARE FOOTAGE	ACRES:	28.986		SF:	1,262,630.16		
BUILDING HEIGHT	PROPOSE	35 FEET OR LESS		MAX:	35 FEET		
BUILDING SETBACKS	FRONT YARD: 25' MIN., FRONT-FACING GARAGE: 30' MIN., SIDE YARD: 7.5' MIN,. REAR YARD: 20' MIN						
OPEN SPACE	30% MIN. REQUIRED, 48.5% PROVIDED						

PARCEL A LEGAL DESCRIPTION; (PARCEL ID # 07-21-28-0000-00-015

THE WEST 1/2 OF THE EAST 1/2 OF THE SOUTHEAST 1/4 OF THE NORTHWEST 1/4 OF SECTION 7, TOWNSHIP 21 SOUTH, RANGE 28 EAST; EAST 1/2 OF THE WEST 1/2 OF THE SOUTHEAST 1/4 OF THE NORTHWEST 1/4 OF SECTION 7, TOWNSHIP 21 SOUTH, RANGE 28 EAST; EAST 1/4 OF THE SOUTHEAST 1/4 OF THE NORTHWEST 1/4 OF SECTION 7, TOWNSHIP 21 SOUTH, RANGE 28 EAST, AND; BEGINNING AT THE SOUTHEAST CORNER OF THE NORTHEAST 1/4 OF THE NORTHWEST 1/4 OF SECTION 7, TOWNSHIP 21 SOUTH, RANGE 28 EAST, RUN THENCE WEST 160 FEET, THENCE NORTH 7° 18' EAST 277.24 FEET, THENCE EAST 124.78 FEET, THENCE SOUTH 275 FEET TO THE P.O.B., ALL IN ORANGE COUNTY, FLORIDA.

APPLICANT
APOPKA CLEAR LAKE
INVESTMENTS, LLC (PARCEL B)
511 WEST BAY STREET, STE. 350
TAMPA, FL 33606

ENGINEER
NV5, INC.
201 SOUTH BUMBY AVENUE
ORLANDO, FLORIDA 32803
407-896-3317

JOB #: 140138.20
PRJ. MGR.: JRC
DESIGNER: JRC
CHECKED: FWA

ENGINEER
JUSTIN R. CHRISTENSEN, P.E.
FL. LIC. #83268

DATE: Feb. 19, 2018

NO.	DATE	REVISIONS

PARCEL A
AT
AVIAN POINTE
APOPKA, FLORIDA
FOR
APOPKA CLEAR LAKE INVESTMENTS, LLC

COVER SHEET

NV5
201 S. BUMBY AVE.
ORLANDO, FL
(407) 896-3317
WWW.NV5.COM
CERTIFICATE OF AUTHORIZATION # 29065

SHEET
1

CITY OF APOPKA GENERAL NOTES:

1. GOVERNING STANDARDS AND SPECIFICATIONS FOR THE ROADWAY CONSTRUCTION ARE THE FLORIDA DEPARTMENT OF TRANSPORTATION (FDOT) STANDARD PLANS (2019 EDITION), FDOT STANDARD SPECIFICATIONS FOR ROAD AND BRIDGE CONSTRUCTION (2019 EDITION), AND CITY OF APOPKA UTILITIES DESIGN AND CONSTRUCTION STANDARDS MANUAL (2016 EDITION).

2. ALL PERSONAL PROPERTY, EXCEPT MAIL BOXES LOCATED WITHIN THE PUBLIC RIGHT-OF-WAY (NOT RELOCATED BY THE PROPERTY OWNER), SHALL BE REMOVED BY THE CONTRACTOR AS NECESSARY TO CONSTRUCT THE PROJECT IN ACCORDANCE WITH THE CONSTRUCTION PLANS. MAIL BOXES SHALL BE RELOCATED BY THE CONTRACTOR IN ACCORDANCE WITH FDOT STANDARD PLANS INDEX NO. 110-200.

3. THE DISPOSAL OF EXCESS EARTHWORK MATERIALS SHALL BE THE RESPONSIBILITY OF THE CONTRACTOR. APPROVAL OF DISPOSAL SITES SHALL BE OBTAINED FROM THE CITY OF APOPKA PRIOR TO DISPOSAL.

4. ALL EXISTING TREES AND STUMPS WITHIN THE RIGHT-OF-WAY AND LIMIT OF THE PROJECT ARE TO BE REMOVED AS CLEARING AND GRUBBING UNLESS OTHERWISE DIRECTED.

5. SEED AND MULCH ALL DISTURBED AREAS NOT COVERED BY SOD UNLESS OTHERWISE DIRECTED.

6. ALL PAVEMENT OFFSETS SHOWN ARE TO THE PROPOSED CENTERLINE OF CONSTRUCTION, AS WHERE RADIUS DIMENSIONS ARE TO THE EDGE OF PAVEMENT, UNLESS OTHERWISE NOTED.

7. TURNOUT LOCATIONS AND WIDTHS SHOWN IN THE CONSTRUCTION PLANS ARE APPROXIMATE AND MAY BE ADJUSTED AS NECESSARY OR AS DIRECTED BY THE ENGINEER. ALL TURNOUTS SHALL BE CONSTRUCTED IN ACCORDANCE WITH FDOT STANDARD PLANS INDEX NO. 522-003.

8. THE VARIOUS PERMITS INCLUDED IN THE BID SPECIFICATIONS PAYMENT ARE INCLUDED IN THE BID PRICE FOR SECTION 104. THE CONTRACTOR SHALL PERFORM HIS WORK IN ACCORDANCE WITH THE REQUIREMENTS OF "PREVENTION, CONTROL, AND ABATEMENT OF EROSION AND WATER POLLUTION", EXCLUDING ITEMS SPECIFIED ELSEWHERE. ENVIRONMENTAL CONTROLS SHALL BE USED AT LOCATIONS DESIGNATED IN THE PLANS AND/OR DESIGNATED BY THE ENGINEER.

9. THE INFORMATION SHOWN ON THESE DRAWINGS CONCERNING TYPE AND LOCATION OF UNDERGROUND AND OTHER UTILITIES ARE BASED ON AVAILABLE RECORDS AND SURVEYS, BUT IS NOT GUARANTEED TO BE ACCURATE OR ALL INCLUSIVE. THE CONTRACTOR SHALL MAKE HIS OWN DETERMINATION AS TO THE TYPE AND LOCATION OF UTILITIES AS MAY BE NECESSARY TO AVOID DAMAGE THERE TO, AND IS RESPONSIBLE FOR COORDINATING UTILITY RELOCATION.

10. PRIOR TO ORDERING DRAINAGE STRUCTURES, THE CONTRACTOR SHALL DETERMINE IF DRAINAGE UTILITY CONFLICTS EXIST. INFORMATION ABOUT POSSIBLE CONFLICTS SHALL BE SUBMITTED TO THE ENGINEER AS SOON AS POSSIBLE AFTER DISCOVERY OF SUCH FOR RESOLUTION.

11. THE CONTRACTOR SHALL NOTIFY ALL GAS UTILITY COMPANIES A MINIMUM OF TWO WORKING DAYS PRIOR TO EXCAVATION AS REQUIRED BY CHAPTER 77-153 OF THE FLORIDA STATUTES.

12. ALL INLET/MANHOLE - PIPE JOINTS SHALL BE FILLED WITH NON-SHRINK GROUT, COVERED WITH AN ASPHALTIC MASTIC COATING, AND WRAPPED WITH A FILTER FABRIC MATERIAL PER SECTION 13.03.03 OF THE ORANGE COUNTY ROAD CONSTRUCTION SPECIFICATIONS.

13. ALL CURB INLETS, DITCH BOTTOM INLETS, AND MANHOLES SHALL HAVE TRAFFIC BEARING FRAMES AND COVERS OR GRATES MEETING AASHTO-20 LOADING REQUIREMENTS.

14. CHANGES OF PIPE INVERTS NOT EXCEEDING PLUS OR MINUS ONE FOOT WILL NOT BE CONSIDERED AS A BASIS FOR ADDITIONAL COMPENSATION FOR THE PERTINENT PIPE BID ITEM OR FOR MODIFICATION OF PRECAST STRUCTURES.

15. ALL BENCHMARKS (IRONS AND MONUMENTS) SHOWN IN THE CONSTRUCTION PLANS, OR FOUND, SHALL BE PRESERVED. THOSE SHOWN IN PROPOSED PAVEMENT SHALL BE PROTECTED WITH A CAST IRON VALVE BOX.

16. PUBLIC LAND CORNERS WITHIN THE LIMITS OF CONSTRUCTION SHALL BE PROTECTED. IF A CORNER MONUMENT IS IN DANGER OF BEING DESTROYED OR DISTURBED, THE CONTRACTOR SHALL NOTIFY THE ENGINEER, WITHOUT DELAY, BY TELEPHONE. THE CONTRACTOR SHALL PROVIDE WRITTEN FOLLOW UP CONFIRMATION WITHIN 48-HOURS OF TELEPHONE NOTIFICATION.

17. PRIOR TO BEGINNING OF ANY CONSTRUCTION, THE CONTRACTOR SHALL SUBMIT TO THE ENGINEER A SET OF FIELD NOTES VERIFYING THE BENCHMARK ELEVATIONS AND THE REFERENCE POINT CONNECTIONS ON THE PLAN AND PROFILE VIEW SHEETS, AND/OR A SET OF FIELD NOTES FOR ALL ADDITIONAL BENCHMARK AND REFERENCE POINT CONNECTIONS PROPOSED TO BE USED IN CONSTRUCTING THE PROJECT WITH THEIR LOCATION, DESCRIPTION AND ELEVATION, BASED ON NORTH AMERICAN VERTICAL DATUM (NAVD88). ALL SUBMITTALS SHALL BE SIGNED AND SEALED BY A PROFESSIONAL LAND SURVEYOR REGISTERED IN THE STATE OF FLORIDA.

18. WITHIN 21 CALENDAR DAYS AFTER NOTICE TO PROCEED, THE CONTRACTOR SHALL STAKE THE PUBLIC RIGHT-OF-WAY AT 50 FOOT INTERVALS AND THE RIGHT-OF-WAY BREAKS WITH CORRESPONDING STATIONS SHOWN ON THE STAKES. NO INVOICE FOR PAYMENT FOR MOBILIZATION (PAY ITEM NO. 101-1) WILL BE PROCESSED UNTIL THE RIGHT-OF-WAY HAS BEEN STAKED TO THE SATISFACTION OF THE ENGINEER.

19. ANY UNITED STATES CODE (USC) AND NATIONAL GEODETIC SURVEY (NGS) MONUMENTS WITHIN THE LIMITS OF CONSTRUCTION SHALL BE PROTECTED. IF IN DANGER OF DAMAGE, THE CONTRACTOR SHALL NOTIFY THE ENGINEER, AND BOTH SHALL NOTIFY:
STATE GEODETIC ADVISOR, NOAA
3900 COMMONWEALTH BLVD. - MS105
TALLAHASSEE, FL PHONE (850) 245-2606

20. IT SHALL BE THE RESPONSIBILITY OF THE CONTRACTOR TO ACQUIRE ALL NECESSARY RIGHT-OF-WAY AND MAINTENANCE OF TRAFFIC PERMITS. THE CITY WILL WAIVE ALL PERMITS REQUIRED FOR CONSTRUCTION ACTIVITIES WITHIN THE LIMITS OF PUBLIC RIGHT-OF-WAY OWNED AND MAINTAINED BY THE CITY OF APOPKA. FOR CONSTRUCTION ACTIVITY WITHIN THE LIMITS OF PUBLIC RIGHT-OF-WAY MAINTAINED BY THE CITY BUT OWNED BY ORANGE COUNTY OR THE STATE OF FLORIDA, THE CONTRACTOR SHALL ACQUIRE THE REQUIRED PERMITS FROM THE AGENCIES. IT SHALL BE THE RESPONSIBILITY OF THE CONTRACTOR TO ENSURE THAT ALL REQUIRED PERMITS ARE OBTAINED AND IN-HAND BEFORE BEGINNING ANY CONSTRUCTION.

21. THE LOCATION OF ALL EXISTING UTILITIES, STORM DRAINAGE SYSTEMS, AND TOPOGRAPHIC FEATURES SHOWN ON THE PLANS HAVE BEEN DETERMINED FROM THE BEST AVAILABLE INFORMATION AND ARE PROVIDED FOR THE CONVENIENCE OF THE CONTRACTOR. THE ENGINEER ASSUMES NO RESPONSIBILITY FOR THEIR INACCURACY. SHOULD A DISCREPANCY ARISE BETWEEN THESE PLANS AND ACTUAL FIELD CONDITIONS, WHICH WOULD APPRECIABLY AFFECT THE EXECUTION OF THESE PLANS, THE CONTRACTOR SHALL HALT CONSTRUCTION AND NOTIFY THE ENGINEER IMMEDIATELY.

22. THE CONTRACTOR SHALL BE RESPONSIBLE FOR NOTIFYING THE CITY WITHIN 48 HOURS BEFORE ANY INSPECTIONS. ALSO, THE CONTRACTOR SHALL BE RESPONSIBLE FOR MEETING ALL INSPECTION CRITERIA, SCHEDULES AND SIGNING SAID INSPECTIONS.

23. THE CONTRACTOR SHALL NOT EXCAVATE, REMOVE OR OTHERWISE DISTURB ANY MATERIAL, STRUCTURE OR PART OF A STRUCTURE WHICH IS LOCATED OUTSIDE THE LINES, GRADES OR GRADING SECTION, ESTABLISHED FOR THIS PROJECT, EXCEPT WHERE SUCH EXCAVATIONS OR REMOVAL IS PROVIDED OR IN THE CONTRACT CONSTRUCTION PLANS OR TECHNICAL SPECIFICATIONS.

24. ALL WORK AND ALL MATERIALS FURNISHED SHALL BE IN CONFORMITY WITH THE LINES, GRADES, GRADING SECTIONS, CROSS SECTIONS, DIMENSIONS, MATERIAL REQUIREMENTS, AND TESTING REQUIREMENTS THAT ARE SPECIFIED IN THE CONTRACT CONSTRUCTION PLANS OR TECHNICAL SPECIFICATIONS.

25. ALL WORK SHALL BE ACCOMPLISHED IN STRICT ACCORDANCE WITH ALL APPLICABLE FEDERAL, STATE AND LOCAL CODES, ORDINANCES AND REGULATIONS.

26. APPARENT ERRORS, DISCREPANCIES OR OMISSIONS IN THE CONSTRUCTION PLANS SHALL BE BROUGHT TO THE ENGINEER'S ATTENTION BEFORE BIDDING.

27. AFTER COMPLETION OF CONSTRUCTION, THE CONTRACTOR SHALL PROVIDE TO THE CITY A COMPLETED AS-BUILT PLAN ONE WEEK PRIOR TO THE FINAL INSPECTION. BEFORE THE FINAL ACCEPTANCE IT SHALL BE THE CONTRACTOR'S RESPONSIBILITY TO PERFORM A SITE CLEANUP FOR THE REMOVAL OF TRASH, DEBRIS, EXCESS MATERIALS, AND EQUIPMENT TO PRESENT THE PROJECT SITE CLEAN AND IN GOOD ORDER.

28. NO EXTRA PAYMENTS SHALL BE ALLOWED FOR ANY WORK REQUIRED DUE TO MISUNDERSTANDING OF JOB OR SITE CONDITIONS AFFECTING THE WORK AS DESCRIBED IN THE TECHNICAL SPECIFICATIONS OR SHOWN ON THE CONSTRUCTION PLANS. THE CONTRACTOR SHALL NOT TAKE ADVANTAGE OF ANY APPARENT ERROR OR OMISSION IN THE CONSTRUCTION PLANS OR TECHNICAL SPECIFICATIONS AND THE ENGINEER SHALL BE PERMITTED TO MAKE CORRECTIONS AND INTERPRETATION AS MAY BE DEEMED NECESSARY FOR THE FULFILLMENT OF THE INTENT OF THE CONTRACT DOCUMENTS. BY ENTERING THE BIDDING PROCESS THE BIDDERS ACKNOWLEDGE ACCEPTANCE OF THESE CONDITIONS.

29. THE CONTRACTOR SHALL SUBMIT FOUR (4) SETS OF DETAILED SHOP DRAWINGS OF ALL MAJOR ITEMS PROPOSED FOR THIS PROJECT TO THE ENGINEER PRIOR TO ORDERING ANY OF THE EQUIPMENT OR MATERIAL. TWO (2) COPIES OF THE SHOP DRAWINGS WILL BE RETURNED TO THE CONTRACTOR. UPON THE CONTRACTOR'S RECEIPT OF APPROVED SHOP DRAWINGS FROM THE ENGINEER, THE CONTRACTOR MAY PROCEED WITH THE WORK.

30. THE CONTRACTOR SHALL COMPLY WITH THE LEGAL LOAD RESTRICTIONS IN HAULING OF MATERIALS IN PUBLIC ROADS BEYOND THE LIMITS OF CONSTRUCTION WORK. A SPECIAL PERMIT WILL NOT RELIEVE THE CONTRACTOR OF LIABILITY FOR DAMAGE WHICH MAY RESULT FROM THE MOVING OF MATERIAL AND EQUIPMENT.

31. DURING CONSTRUCTION, NO DIRECT DISCHARGE OF WATER TO DOWNSTREAM RECEIVING WATERS WILL BE ALLOWED. THE CONTRACTOR IS RESPONSIBLE FOR MAINTAINING WATER QUALITY AND ROUTE DISCHARGE WATER IN SUCH A MANNER AS TO ADEQUATELY REMOVE SILT PRIOR TO RUNOFF FROM THE SITE.

32. CONNECTION TO EXISTING LINES TO WHICH UTILITY PIPE OF THE CONTRACT MUST CONNECT, THE FOLLOWING WORK SHALL BE PERFORMED:
A. EXPOSE BURIED LINES TO CONFIRM OR DETERMINE END CONNECTION, PIPE MATERIAL AND DIAMETER.
B. FURNISHING AND INSTALLING PIPING AND MAKING PROPER CONNECTIONS.

33. PROJECT SHALL COMPLY WITH THE FOLLOWING:
* AMERICANS WITH DISABILITIES ACT
* CITY OF APOPKA MUNICIPAL & LAND USE CODES, DESIGN GUIDELINES AND STANDARDS.
* CITY OF APOPKA FIRE DEPARTMENT
* FLORIDA FIRE MARSHAL
* FLORIDA DEPARTMENT OF TRANSPORTATION
* ST JOHNS WATER MANAGEMENT DISTRICT

34. BUFFER, LANDSCAPING, RECREATION & COMMON AREAS WILL BE PRIVATELY OWNED AND MAINTAINED BY THE PROPERTY OWNER.

35. BUFFER, WHERE REQUIRED, WILL CONSIST OF LANDSCAPING, BERMS, APPROVED FENCING, EXISTING AND NEW CITY APPROVED TREES.

36. PROJECT INFRASTRUCTURE WILL BE DEVELOPED IN ONE PHASE.

37. UTILITIES SHALL BE PROVIDED BY THE CITY OF APOPKA.

38. PROJECT SHALL COMPLY WITH CITY OF APOPKA DEVELOPMENT REQUIREMENTS PER MUNICIPAL CODE PART III ARTICLE II LAND USE: TYPE, DENSITY AND INTENSITY.

39. STRUCTURES SHALL COMPLY WITH FLORIDA BUILDING CODE, CURRENT ENFORCED EDITION.

40. ROADS AND PARKING AREA SHALL COMPLY WITH FDOT DESIGN AND ENGINEERING REQUIREMENTS. PUBLIC RIGHT-OF-WAY PAVEMENT WORK MUST UTILIZE TYPE SP-9.5 ASPHALT.

41. LANDSCAPE AND IRRIGATION PLANS SHALL BE DESIGNED IN ACCORDANCE WITH CITY ORDINANCE NO. 2069.

42. DEVELOPER AGREEMENT SHALL BE REQUIRED FOR OFF-SITE RIGHT-OF-WAY IMPROVEMENTS FROM THE NORTH ENTRANCE DRIVE TO THE INTERSECTION OF W. ORANGE AVENUE AND KING STREET.

SITE NOTES:

1. IF ANY EXISTING STRUCTURES TO REMAIN ARE DAMAGED DURING CONSTRUCTION IT SHALL BE THE CONTRACTORS RESPONSIBILITY TO REPAIR AND/OR REPLACE THE EXISTING STRUCTURE AS NECESSARY TO RETURN IT TO EXISTING CONDITIONS OR BETTER.

2. ALL STORM SEWER MANHOLES IN PAVED AREAS SHALL BE FLUSH WITH PAVEMENT, AND SHALL HAVE TRAFFIC BEARING RING & COVERS. MANHOLES IN UNPAVED AREAS SHALL BE 6" ABOVE FINISH GRADE. LIDS SHALL BE LABELED "STORM SEWER".

3. THE CONTRACTOR SHALL ADHERE TO ALL TERMS & CONDITIONS AS OUTLINED IN THE GENERAL N.P.D.E.S. PERMIT FOR STORM WATER DISCHARGE ASSOCIATED WITH CONSTRUCTION ACTIVITIES.

4. ALL STORM STRUCTURES SHALL HAVE A SMOOTH UNIFORM POURED MORTAR INVERT FROM INVERT IN TO INVERT OUT.

5. ALL POWER SERVICES WILL HAVE TO BE UNDERGROUND, NO OVERHEAD SERVICE WILL BE ALLOWED.

JOB #: 16038.20
PRJ. MGR.: JRC
DESIGNER: JRC
CHECKED: FWA

ENGINEER
JUSTIN R. CARPENTER, P.E.
FL. LIC. #83268
DATE: Feb. 19, 2018

NO.	DATE	REVISIONS

PARCEL A
AT
AVIAN POINTE
APOPKA, FLORIDA
FOR
APOPKA CLEAR LAKE INVESTMENTS, LLC

GENERAL NOTES

NV5
201 S. BUMBY AVE.
ORLANDO, FL
(407) 896-3317
WWW.NV5.COM
CERTIFICATE OF AUTHORIZATION # 29065

SHEET
2

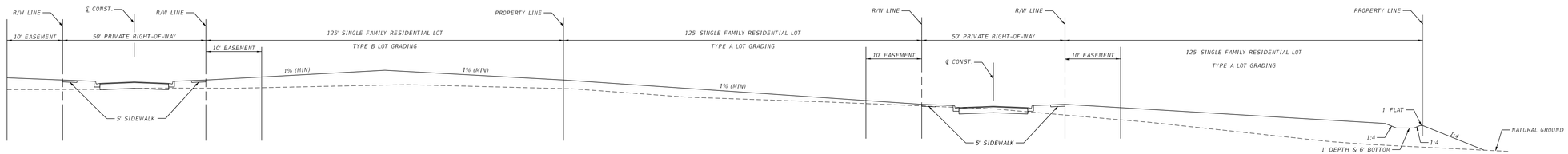

TYPICAL SECTION A-A
(See Sheet 5)
NTS

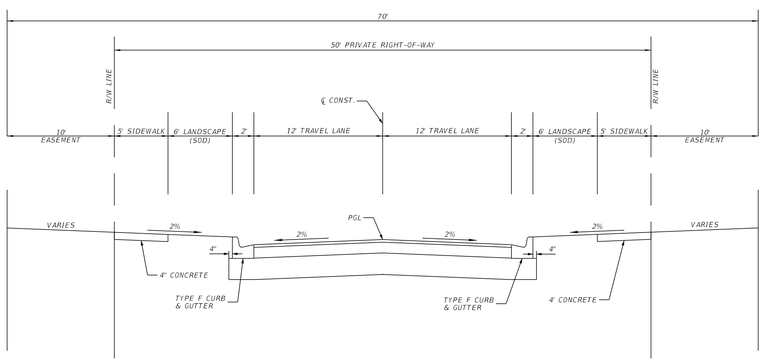

SEGMENTS 100 & 300
ROADWAY TYPICAL SECTION
NTS

PAVEMENT DETAILS

1" 1/4" TYPE SP 9.5 ASPHALT
6" LIMEROCK BASE (LBR = 100)
12" STABILIZED SUBGRADE - 98% OF MODIFIED PROCTOR MAXIMUM
DRY DENSITY (ASTM D 1557) WITH A DESIGN LBR = 40

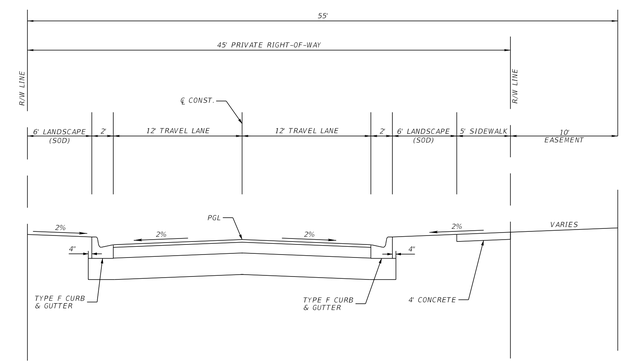

SEGMENT 200
ROADWAY TYPICAL SECTION
NTS

PAVEMENT DETAILS

1" 1/4" TYPE SP 9.5 ASPHALT
6" LIMEROCK BASE (LBR = 100)
12" STABILIZED SUBGRADE - 98% OF MODIFIED PROCTOR MAXIMUM
DRY DENSITY (ASTM D 1557) WITH A DESIGN LBR = 40

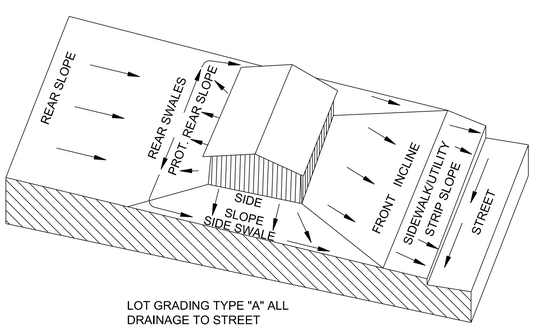

LOT GRADING TYPE "A" ALL
DRAINAGE TO STREET

LOT GRADING PLAN - TYPE "A"
NTS

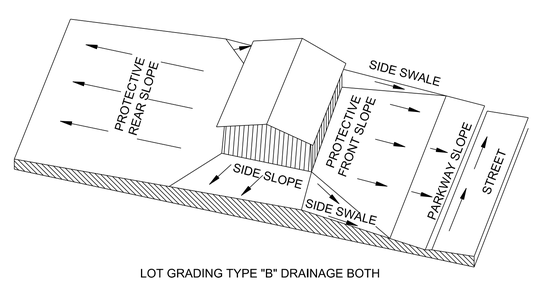

LOT GRADING TYPE "B" DRAINAGE BOTH
TO STREET AND TO REAR LOT LINE

LOT GRADING PLAN - MODIFIED TYPE "B"
NTS

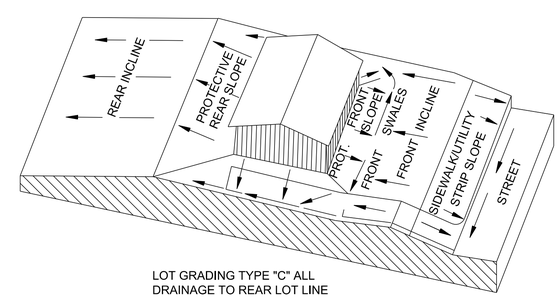

LOT GRADING TYPE "C" ALL
DRAINAGE TO REAR LOT LINE

LOT GRADING PLAN - TYPE "C"
NTS

JOB #: 140138.20
PRJ. MGR.: JRC
DESIGNER: JRC
CHECKED: FWA

ENGINEER
JUSTIN R. CUNNINGHAM, P.E.
FL. LIC. #83288
DATE: Feb. 19, 2018

NO.	DATE	REVISIONS

PARCEL A
AVIAN POINTE
APOPKA, FLORIDA
FOR
APOPKA CLEAR LAKE INVESTMENTS, LLC

TYPICAL SECTIONS & GRADING DETAILS

NV5
201 S. BUMBY AVE.
ORLANDO, FL
(407) 896-3317
WWW.NV5.COM
CERTIFICATE OF AUTHORIZATION # 29065

SHEET
3

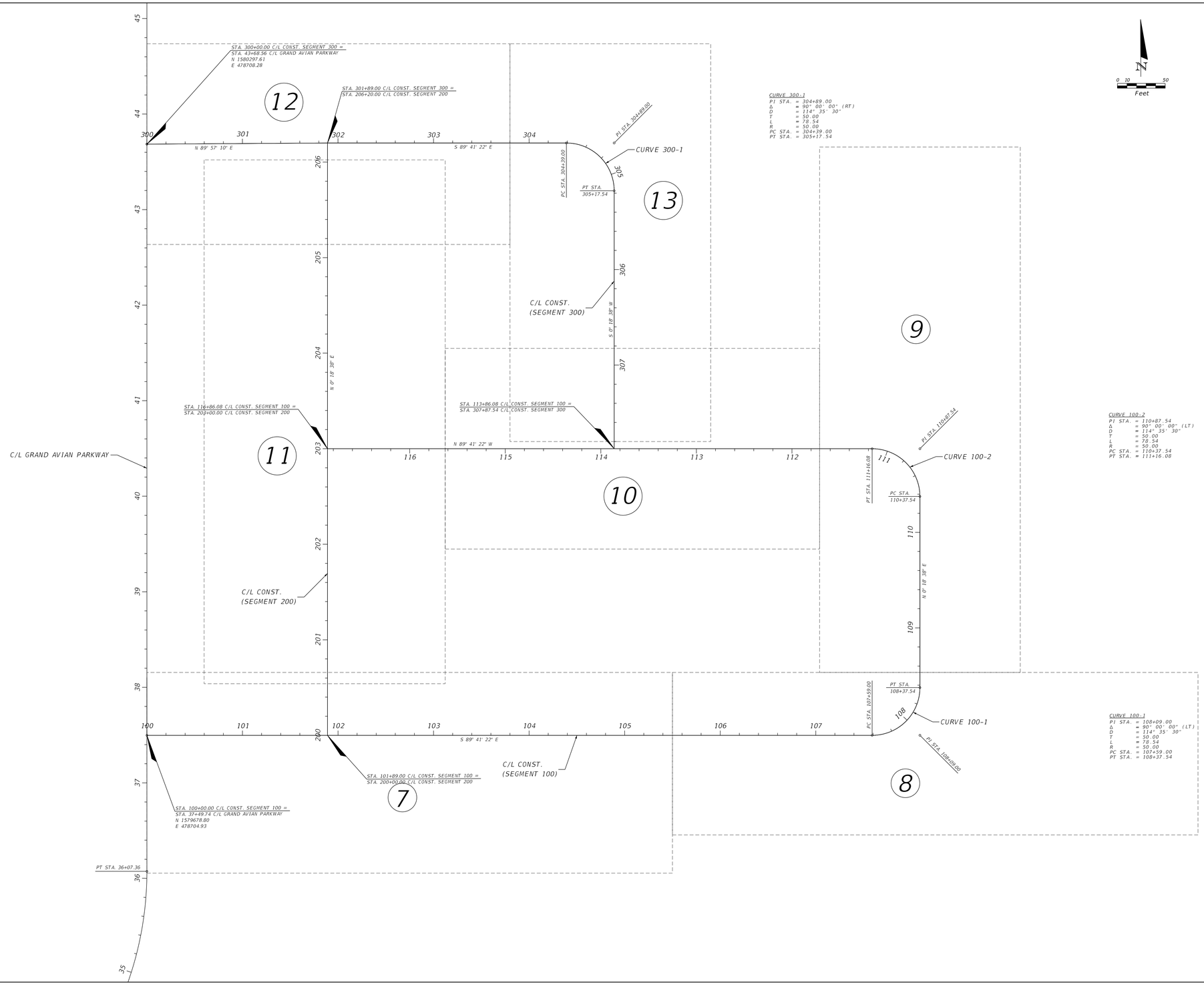

CURVE 300-1
PI STA. = 304+89.00
Δ = 90° 00' 00" (RT)
D = 114° 35' 30"
T = 50.00
L = 78.54
R = 50.00
PC STA. = 304+39.00
PT STA. = 305+17.54

CURVE 100-2
PI STA. = 110+87.54
Δ = 90° 00' 00" (LT)
D = 114° 35' 30"
T = 50.00
L = 78.54
R = 50.00
PC STA. = 110+37.54
PT STA. = 111+16.08

CURVE 100-1
PI STA. = 108+09.00
Δ = 90° 00' 00" (LT)
D = 114° 35' 30"
T = 50.00
L = 78.54
R = 50.00
PC STA. = 107+59.00
PT STA. = 108+37.54

LEGEND

PLAN AND PROFILE SHEET NUMBER

JOB #: 140138.20
PRJ. MGR.: JRC
DESIGNER: JRC
CHECKED: FWA
DATE: Feb. 19, 2018

ENGINEER
JUSTIN R. CHRISTENSEN, P.E.
FL. LIC. #83268

NO.	DATE	REVISIONS

PARCEL A
AVIAN POINTE
APOPKA, FLORIDA
FOR
APOPKA CLEAR LAKE INVESTMENTS, LLC

MASTER LAYOUT AND GEOMETRY PLAN

NV5
201 S. BUMBY AVE.
ORLANDO, FL
(407) 896-3317
WWW.NV5.COM
CERTIFICATE OF AUTHORIZATION # 29065

SHEET
4

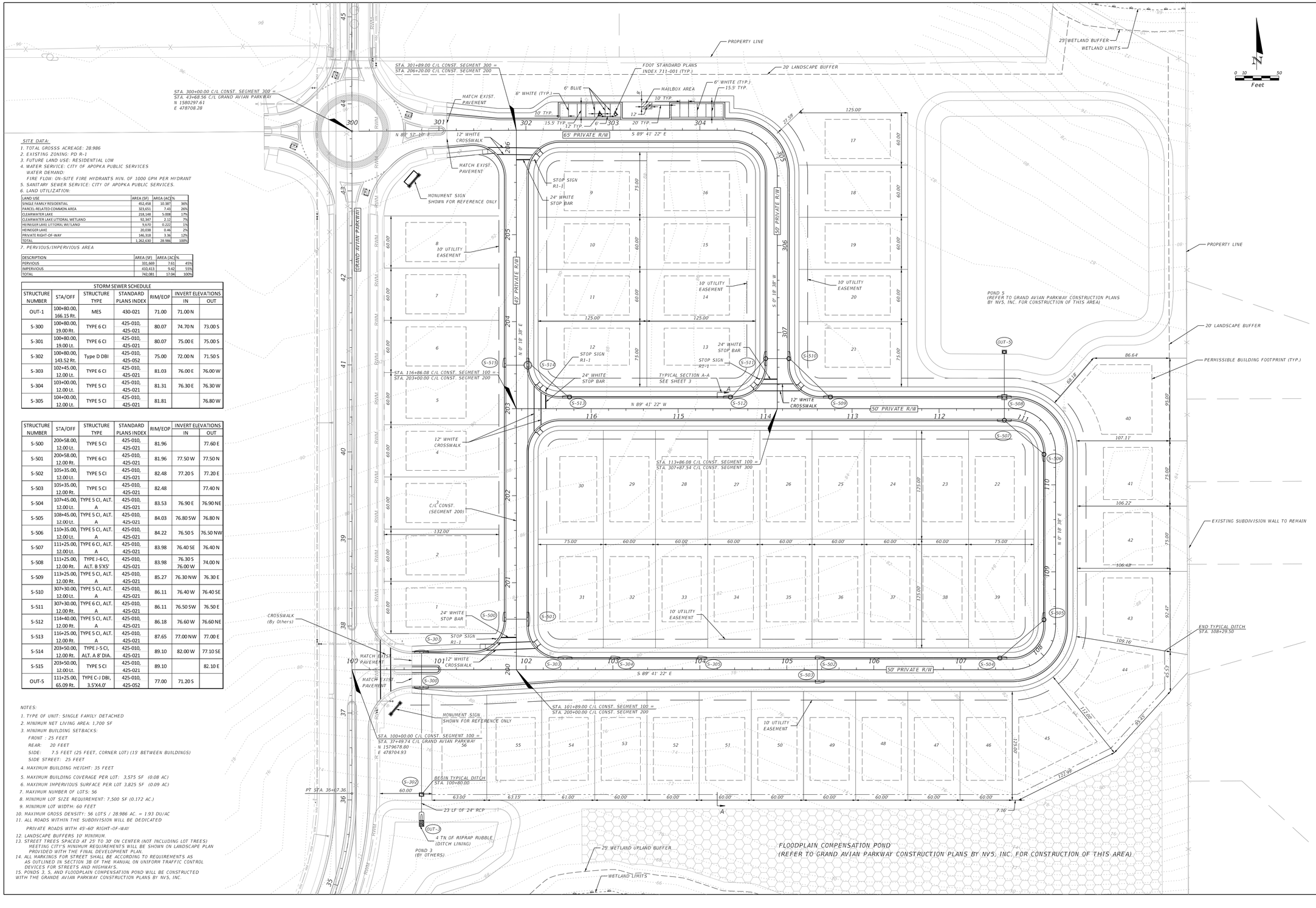

SITE DATA:

1. TOTAL GROSSS ACREAGE: 28.986
2. EXISTING ZONING: PD R-1
3. FUTURE LAND USE: RESIDENTIAL LOW
4. WATER SERVICE: CITY OF APOPKA PUBLIC SERVICES
   WATER DEMAND:
   FIRE FLOW: ON-SITE FIRE HYDRANTS MIN. OF 1000 GPM PER HYDRANT
5. SANITARY SEWER SERVICE: CITY OF APOPKA PUBLIC SERVICES.
6. LAND UTILIZATION:

LAND USE	AREA (SF)	AREA (AC)	%
SINGLE FAMILY RESIDENTIAL	452,458	10.387	36%
PARCEL-RELATED COMMON AREA	323,651	7.43	26%
CLEARWATER LAKE	218,148	5.008	17%
CLEARWATER LAKE LITTORAL WETLAND	92,347	2.12	7%
HEINEIGER LAKE LITTORAL WETLAND	9,670	0.222	1%
HEINEIGER LAKE	20,038	0.46	2%
PRIVATE RIGHT-OF-WAY	146,318	3.36	12%
TOTAL	1,262,630	28.986	100%

7. PERVIOUS/IMPERVIOUS AREA

DESCRIPTION	AREA (SF)	AREA (AC)	%
PERVIOUS	331,669	7.61	45%
IMPERVIOUS	410,413	9.42	55%
TOTAL	742,081	17.04	100%

STORM SEWER SCHEDULE

STRUCTURE NUMBER	STA/OFF	STRUCTURE TYPE	STANDARD PLANS INDEX	RIM/EOP	INVERT ELEVATIONS IN	INVERT ELEVATIONS OUT
OUT-1	100+80.00, 166.15 Rt.	MES	430-021	71.00	71.00 N	
S-300	100+80.00, 19.00 Rt.	TYPE 6 CI	425-010, 425-021	80.07	74.70 N	73.00 S
S-301	100+80.00, 19.00 Lt.	TYPE 6 CI	425-010, 425-021	80.07	75.00 E	75.00 S
S-302	100+80.00, 143.52 Rt.	Type D DBI	425-010, 425-052	75.00	72.00 N	71.50 S
S-303	102+45.00, 12.00 Lt.	TYPE 6 CI	425-010, 425-021	81.03	76.00 E	76.00 W
S-304	103+00.00, 12.00 Lt.	TYPE 5 CI	425-010, 425-021	81.31	76.30 E	76.30 W
S-305	104+00.00, 12.00 Lt.	TYPE 5 CI	425-010, 425-021	81.81		76.80 W

STRUCTURE NUMBER	STA/OFF	STRUCTURE TYPE	STANDARD PLANS INDEX	RIM/EOP	INVERT ELEVATIONS IN	INVERT ELEVATIONS OUT
S-500	200+58.00, 12.00 Lt.	TYPE 5 CI	425-010, 425-021	81.96		77.60 E
S-501	200+58.00, 12.00 Rt.	TYPE 6 CI	425-010, 425-021	81.96	77.50 W	77.50 N
S-502	105+35.00, 12.00 Lt.	TYPE 5 CI	425-010, 425-021	82.48	77.20 S	77.20 E
S-503	105+35.00, 12.00 Rt.	TYPE 5 CI	425-010, 425-021	82.48		77.40 N
S-504	107+45.00, 12.00 Lt.	TYPE 5 CI, ALT. A	425-010, 425-021	83.53	76.90 E	76.90 NE
S-505	108+45.00, 12.00 Lt.	TYPE 5 CI, ALT. A	425-010, 425-021	84.03	76.80 SW	76.80 N
S-506	110+35.00, 12.00 Lt.	TYPE 5 CI, ALT. A	425-010, 425-021	84.22	76.50 S	76.50 NW
S-507	111+25.00, 12.00 Lt.	TYPE 6 CI, ALT. A	425-010, 425-021	83.98	76.40 SE	76.40 N
S-508	111+25.00, 12.00 Rt.	TYPE J-6 CI, ALT. B 5'X5'	425-010, 425-021	83.98	76.30 S 76.00 W	74.00 N
S-509	113+25.00, 12.00 Rt.	TYPE 5 CI, ALT. A	425-010, 425-021	85.27	76.30 NW	76.30 E
S-510	307+30.00, 12.00 Lt.	TYPE 5 CI, ALT. A	425-010, 425-021	86.11	76.40 W	76.40 SE
S-511	307+30.00, 12.00 Rt.	TYPE 6 CI, ALT. A	425-010, 425-021	86.11	76.50 SW	76.50 E
S-512	114+40.00, 12.00 Rt.	TYPE 5 CI, ALT. A	425-010, 425-021	86.18	76.60 W	76.60 NE
S-513	116+25.00, 12.00 Rt.	TYPE 5 CI, ALT. A	425-010, 425-021	87.65	77.00 NW	77.00 E
S-514	203+50.00, 12.00 Rt.	TYPE J-5 CI, ALT. A 8' DIA.	425-010, 425-021	89.10	82.00 W	77.10 SE
S-515	203+50.00, 12.00 Lt.	TYPE 5 CI	425-010, 425-021	89.10		82.10 E
OUT-5	111+25.00, 65.09 Rt.	TYPE C-J DBI, 3.5'X4.0'	425-010, 425-052	77.00	71.20 S	

NOTES:

1. TYPE OF UNIT: SINGLE FAMILY DETACHED
2. MINIMUM NET LIVING AREA: 1,700 SF
3. MINIMUM BUILDING SETBACKS:
   FRONT : 25 FEET
   REAR: 20 FEET
   SIDE: 7.5 FEET (25 FEET, CORNER LOT) (15' BETWEEN BUILDINGS)
   SIDE STREET: 25 FEET
4. MAXIMUM BUILDING HEIGHT: 35 FEET
5. MAXIMUM BUILDING COVERAGE PER LOT: 3,575 SF (0.08 AC)
6. MAXIMUM IMPERVIOUS SURFACE PER LOT 3,825 SF (0.09 AC)
7. MAXIMUM NUMBER OF LOTS: 56
8. MINIMUM LOT SIZE REQUIREMENT: 7,500 SF (0.172 AC.)
9. MINIMUM LOT WIDTH: 60 FEET
10. MAXIMUM GROSS DENSITY: 56 LOTS / 28.986 AC. = 1.93 DU/AC
11. ALL ROADS WITHIN THE SUBDIVISION WILL BE DEDICATED
    PRIVATE ROADS WITH 45-60' RIGHT-OF-WAY
12. LANDSCAPE BUFFERS 10' MINIMUM.
13. STREET TREES SPACED AT 25' TO 30' ON CENTER (NOT INCLUDING LOT TREES) MEETING CITY'S MINIMUM REQUIREMENTS WILL BE SHOWN ON LANDSCAPE PLAN PROVIDED WITH THE FINAL DEVELOPMENT PLAN.
14. ALL MARKINGS FOR STREET SHALL BE ACCORDING TO REQUIREMENTS AS AS OUTLINED IN SECTION 3B OF THE MANUAL ON UNIFORM TRAFFIC CONTROL DEVICES FOR STREETS AND HIGHWAYS.
15. PONDS 3, 5, AND FLOODPLAIN COMPENSATION POND WILL BE CONSTRUCTED WITH THE GRANDE AVIAN PARKWAY CONSTRUCTION PLANS BY NV5, INC.

JOB #: 140138.20
PRJ. MGR.: JRC
DESIGNER: JRC
CHECKED: FWA

ENGINEER
JUSTIN R. CRUMPLER, P.E.
FL. LIC. #83288

DATE: Feb. 19, 2018

NO.	DATE	REVISIONS

PARCEL A
AT
AVIAN POINTE
APOPKA, FLORIDA
FOR
APOPKA CLEAR LAKE INVESTMENTS, LLC

SITE PLAN

NV5
201 S. BUMBY AVE.
ORLANDO, FL
(407) 896-3317
WWW.NV5.COM
CERTIFICATE OF AUTHORIZATION # 29065

SHEET
5

JOB #: 140138.20
PRJ. MGR.: JRC
DESIGNER: JRC
CHECKED: FWA
DATE: Feb. 19, 2018

ENGINEER
JUSTIN R. CARPENTER, P.E.
FL. LIC. #83288

NO.	DATE	REVISIONS

PARCEL A
AT
AVIAN POINTE
APOPKA, FLORIDA
FOR
APOPKA CLEAR LAKE INVESTMENTS, LLC

PAVING AND GRADING PLAN

NV5
201 S. BUMBY AVE.
ORLANDO, FL
(407) 898-3317
WWW.NV5.COM
CERTIFICATE OF AUTHORIZATION # 29005

SHEET
6

MATCHLINE STA. 200+50.00

MATCHLINE STA. 105+00.00

MATCH EXISTING PAVEMENT

37 LF OF 18" RCP

+69.00 27.00 LT

+19.00 29.00 LT

5' CONCRETE SIDEWALK

CR-1

38 R

25 R

8" 45° BEND

C/L CONST. (SEGMENT 200)

TYPE F CURB & GUTTER

+39.00 19.00 LT

162 LF OF 18" RCP

+39.00 12.00 LT

54 LF OF 18" RCP

97 LF OF 18" RCP

10' UTILITY EASEMENT

8" FH ASSEMBLY

STA. 105+00.00 17.59 LT

207 LF OF 24" RCP

C/L CONST (SEGMENT 100)

TYPE F CURB & GUTTER

23 LF OF 18" RCP

S-301 S-300 S-303 S-304 S-305 S-502 S-503 S-302

191 200 102 103 104 105

SAN-1 SAN-2

60' PRIVATE ROW

50' PRIVATE ROW

+97.00 5.00 LT

+97.00 5.00 RT

TYPE F CURB & GUTTER

+45.50 19.00 RT

+39.00 12.00 RT

+39.00 25.00 RT

+69.03 27.00 RT

+19.03 30.47 RT

+34.15 30.42 RT

SINGLE WM SERVICE SEE DETAIL (TYP.)

DOUBLE SANITARY SERVICE SEE DETAIL (TYP.)

6" 45° BEND

DOUBLE WM SERVICE SEE DETAIL (TYP.)

DOUBLE RWM SERVICE SEE DETAIL (TYP.)

MONUMENT SIGN

120 LF OF 18" RCP

56 55 54 53 52 51 50 4

BEGIN TYPICAL DITCH STA. 100+80.00

TYPICAL DITCH

BEGIN PROFILE SEGMENT 100
STA. 100+69.00
EL. 80.39

EXISTING GROUND @ C/L CONST.

PROFILE GRADE LINE

80.39

18" RCP

CONNECT TO EXISTING

FL 75.00

8" PVC

FL 76.00

FL 76.00

FL 76.30

FL 76.30

FL 76.80

FL 77.20

24" RCP

82 78 74 70 66

101+00 102+00 103+00 104+00 105+00

SCALE: 1"= 20' HORIZ.
1"= 2' VERT.

Feet 0 5 20

JOB #: 140938.20

PRJ. MGR.: JRC

DESIGNER: JRC

CHECKED: FWA

ENGINEER
JUSTIN R. CHRISTENSEN, P.E.
FL LIC. #83288

DATE: Feb. 19, 2019

NO.	DATE	REVISIONS

RECORD DRAWING

THIS RECORD DRAWING IS BASED ON WHAT WAS BUILT AS NOTED PERSONAL FIELD OBSERVATIONS DURING CONSTRUCTION. A PROFESSIONAL LAND SURVEYOR HAS PROVIDED THE AS-BUILT INDICATING CHANGES INCORPORATED DURING CONSTRUCTION. THE CONTRACTOR HAS PROVIDED THE AS-BUILT DATA FOR THE WATER AND WASTEWATER SYSTEMS. ALTHOUGH THE ACCURACY CAN NOT BE GUARANTEED, THIS DRAWING IS BELIEVED TO BE ACCURATE AND THE DRAWING IS CORRECT TO THE BEST OF HIS/HER KNOWLEDGE.

ENGINEER:
FL LIC. #

PARCEL A
AT
AVIAN POINTE
APOPKA, FLORIDA
FOR
APOPKA CLEAR LAKE INVESTMENTS, LLC

PLAN AND PROFILE
SHEET (SEGMENT 100)

NV5
201 S. BUMBY AVE.
ORLANDO, FL
(407) 896-3317
WWW.NV5.COM
CERTIFICATE OF AUTHORIZATION # 29905

SHEET
7

christensenj 3/18/2019 2:18:21 PM H:\projects\AvianPointe_ParcelA\roadway\PLANRD01.dgn

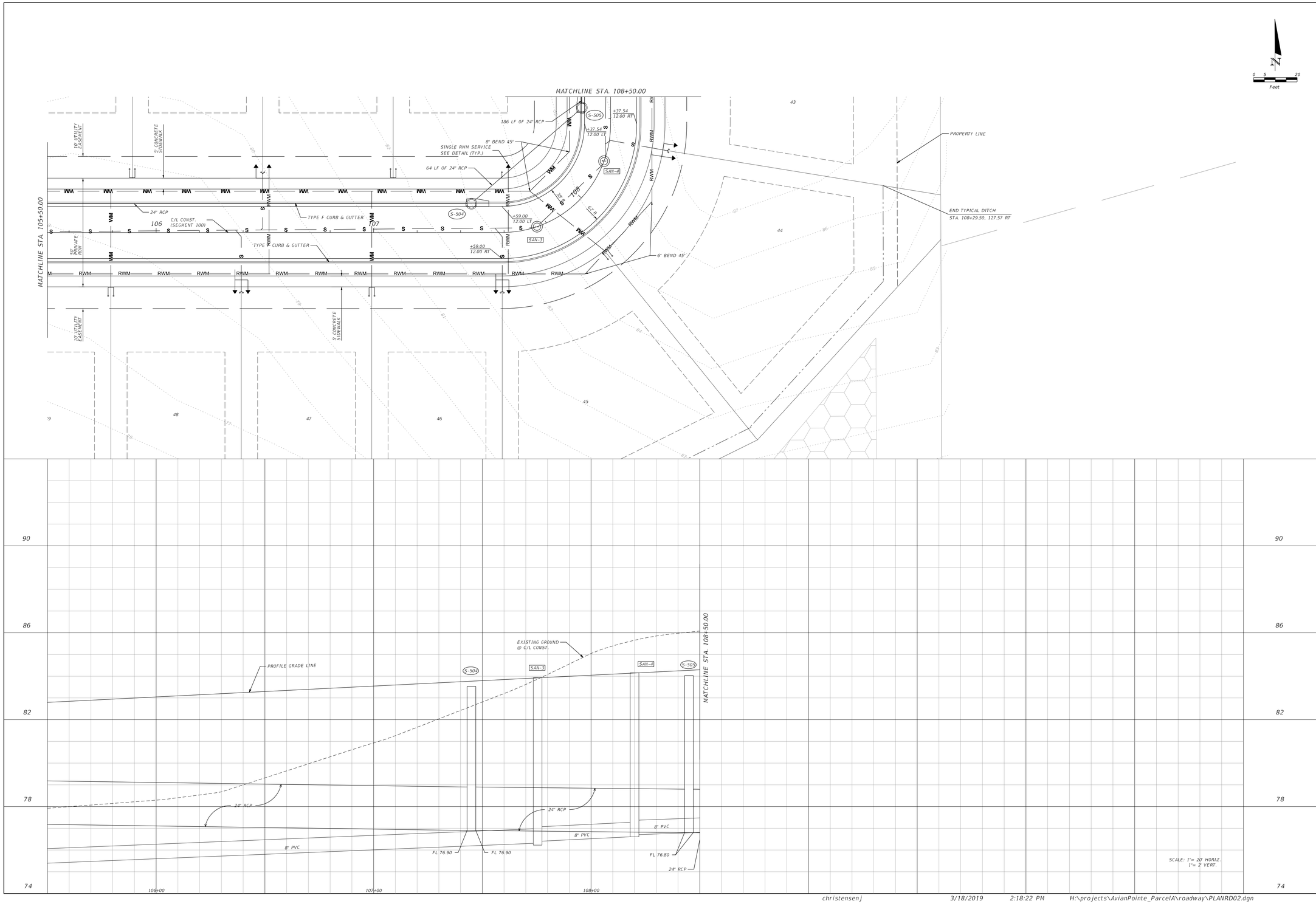

JOB #: 140138.20

PRJ. MGR: JRC

DESIGNER: JRC

CHECKED: FWA

ENGINEER
JUSTIN C. CHRISTENSEN, P.E.
FL LIC. #83268

DATE: Feb. 19, 2019

NO.	DATE	REVISIONS

RECORD DRAWING

THIS RECORD DRAWING IS BASED ON AVAILABLE INFORMATION, LIMITED PERIODIC FIELD OBSERVATIONS DURING CONSTRUCTION, AND CONTRACTOR CERTIFICATIONS. IT DOES NOT INCLUDE ALL INDICATING CHANGES INCORPORATED DURING CONSTRUCTION, WHICH MAY HAVE BEEN MADE BY OTHERS. IN THE CASE OF POTABLE WATER/WASTEWATER SYSTEMS, ALTHOUGH THE ACCURACY CAN NOT BE GUARANTEED, THIS DRAWING IS BELIEVED TO BE CORRECT AS THE DRAWING IS CORRECT TO THE BEST OF HIS/HER KNOWLEDGE.

ENGINEER:
FL LIC. #

PARCEL A
AVIAN POINTE
APOPKA, FLORIDA
FOR
APOPKA CLEAR LAKE INVESTMENTS, LLC

PLAN AND PROFILE
SHEET (SEGMENT 100)

NV5
201 S. BUMBY AVE.
ORLANDO, FL
(407) 896-3317
WWW.NV5.COM
CERTIFICATE OF AUTHORIZATION # 29005

SHEET
8

christensenj 3/18/2019 2:18:22 PM H:\projects\AvianPointe_ParcelA\roadway\PLANRD02.dgn

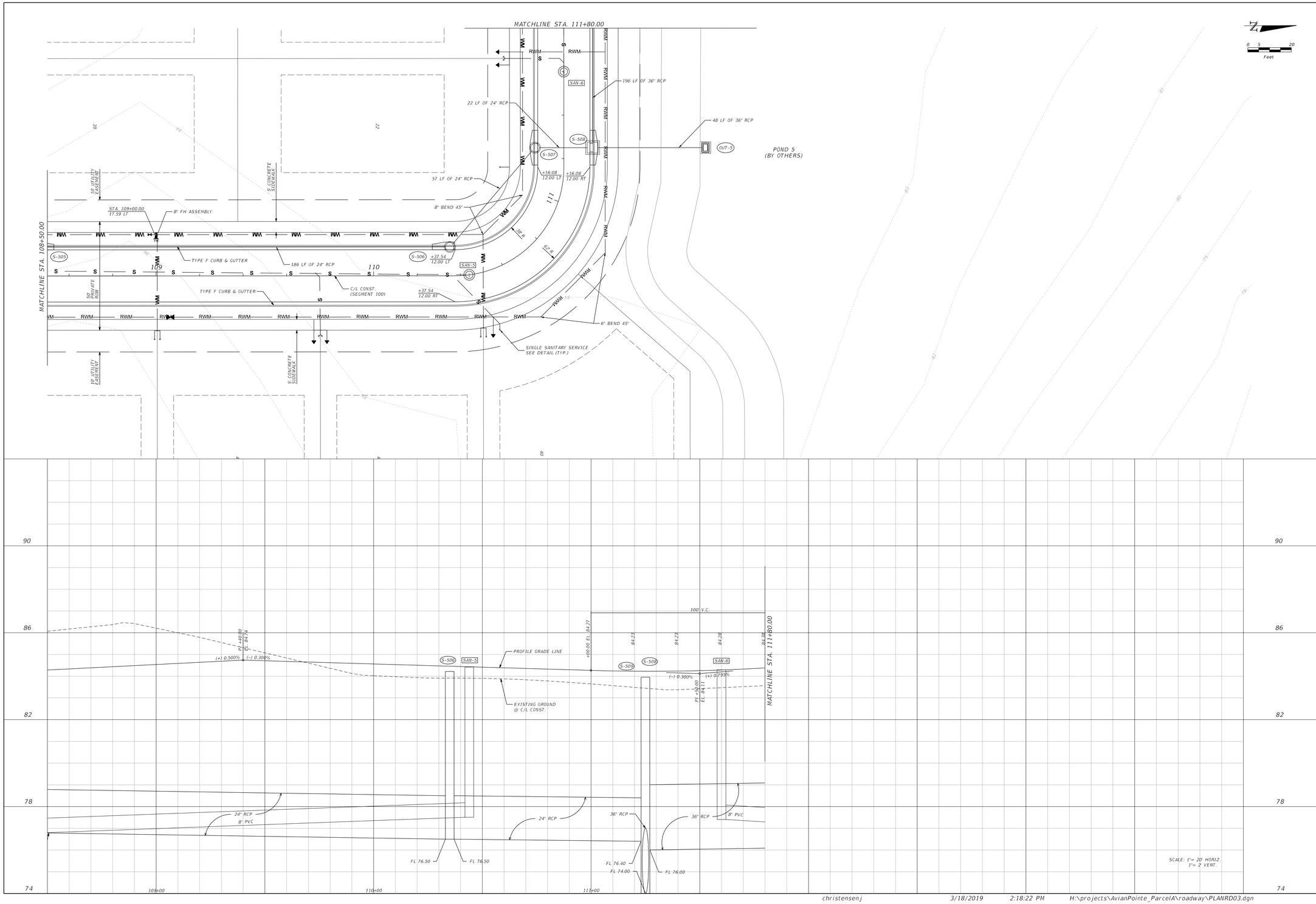

JOB #: 140138.20

PRJ. MGR.: JRC

DESIGNER: JRC

CHECKED: FWA

ENGINEER
JUSTIN R. CHRISTENSEN, P.E.
FL LIC. #83268

DATE: Feb. 19, 2019

NO.	DATE	REVISIONS

RECORD DRAWING

THIS RECORD DRAWING IS BASED ON WHAT WAS PERMITTED PERIODIC FIELD OBSERVATIONS DURING CONSTRUCTION, A REVIEW OF CONTRACTOR DOCUMENTS, AND OTHER DATA INDICATING CHANGES INCORPORATED DURING CONSTRUCTION. HOWEVER, THE ACCURACY OF THE LOCATIONS OF ALL PIPES, WASTEWATER SYSTEMS, ALTHOUGH THE ACCURACY CAN NOT BE GUARANTEED, IS BELIEVED TO BE REPRESENTED ON THIS DRAWING IS CORRECT TO THE BEST OF HIS/HER KNOWLEDGE.

ENGINEER:
FL LIC. #

PARCEL A
AVIAN POINTE
APOPKA, FLORIDA
FOR
APOPKA CLEAR LAKE INVESTMENTS, LLC

PLAN AND PROFILE
SHEET (SEGMENT 100)

NV5
201 S. BUMBY AVE.
ORLANDO, FL
(407) 898-3317
WWW.NV5.COM
CERTIFICATE OF AUTHORIZATION # 29905

SHEET
9

christensenj 3/18/2019 2:18:22 PM H:\projects\AvianPointe_ParcelA\roadway\PLANRD03.dgn

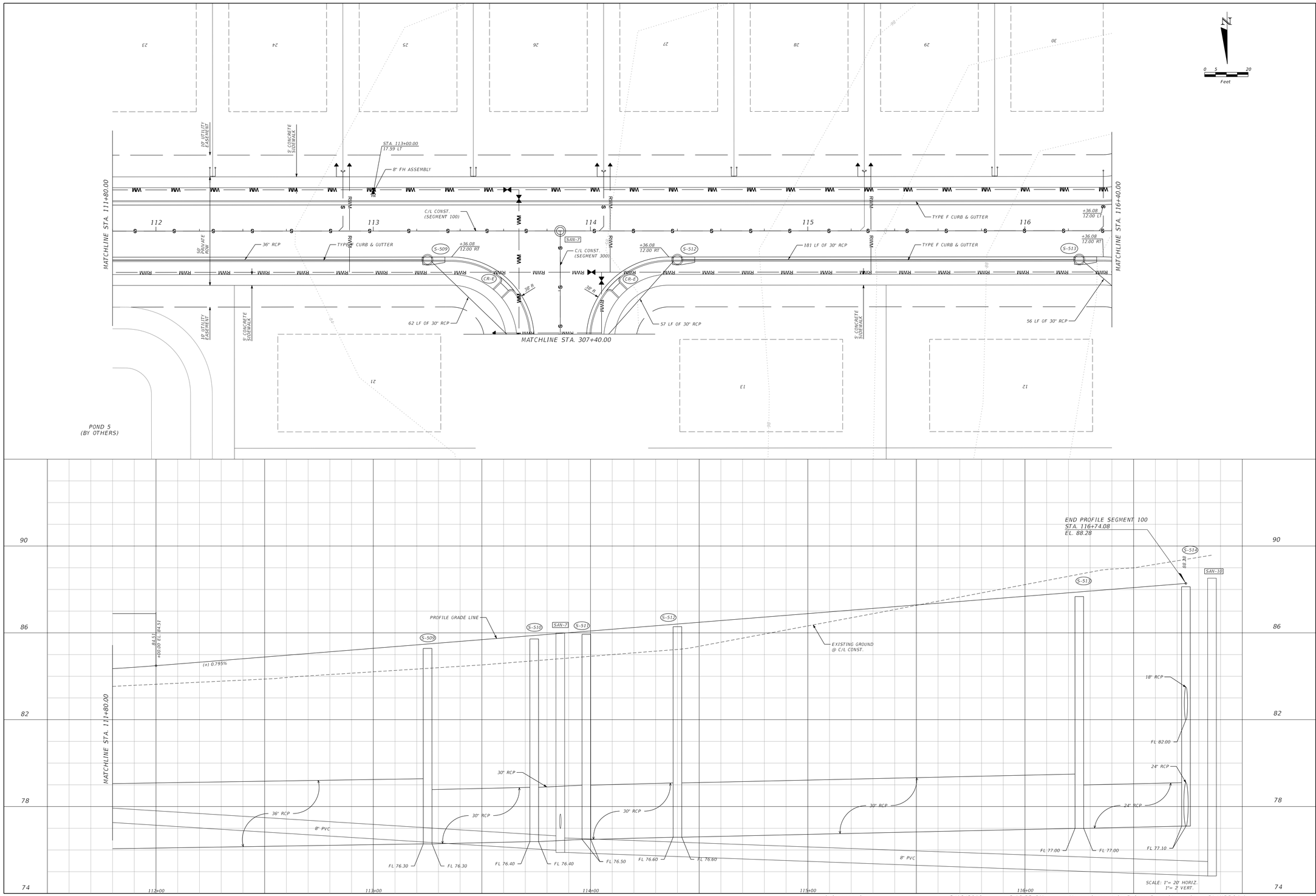

0 5 20
Feet

JOB #: 140138.20
PRJ. MGR.: JRC
DESIGNER: JRC
CHECKED: FWA

ENGINEER
JUSTIN C. CHRISTENSEN, P.E.
FL. LIC. #83288

DATE: Feb. 19, 2019

NO.	DATE	REVISIONS

RECORD DRAWING

THIS RECORD DRAWING IS BASED ON AVAILABLE INFORMATION, LIMITED PERIODIC FIELD OBSERVATIONS DURING CONSTRUCTION, & RECEIVED CERTIFIED CONSTRUCTION PLANS & DOCUMENTS INDICATING CHANGES INCORPORATED DURING CONSTRUCTION. NO GUARANTEE IS EXPRESSED OR IMPLIED REGARDING THE PERFECTNESS OF WATERWAYS, WASTEWATER SYSTEMS, ALTHOUGH THE ACCURACY CAN NOT BE GUARANTEED, IT IS BELIEVED THIS RECORD DRAWING IS CORRECT TO THE BEST OF HIS/HER KNOWLEDGE.

ENGINEER:
FL LIC. #

PARCEL A
AVIAN POINTE
APOPKA, FLORIDA
FOR
APOPKA CLEAR LAKE INVESTMENTS, LLC

PLAN AND PROFILE
SHEET 'SEGMENT 100'

NV5
201 S. BUMBY AVE.
ORLANDO, FL
(407) 896-3317
WWW.NV5.COM
CERTIFICATE OF AUTHORIZATION # 29065

SHEET
10

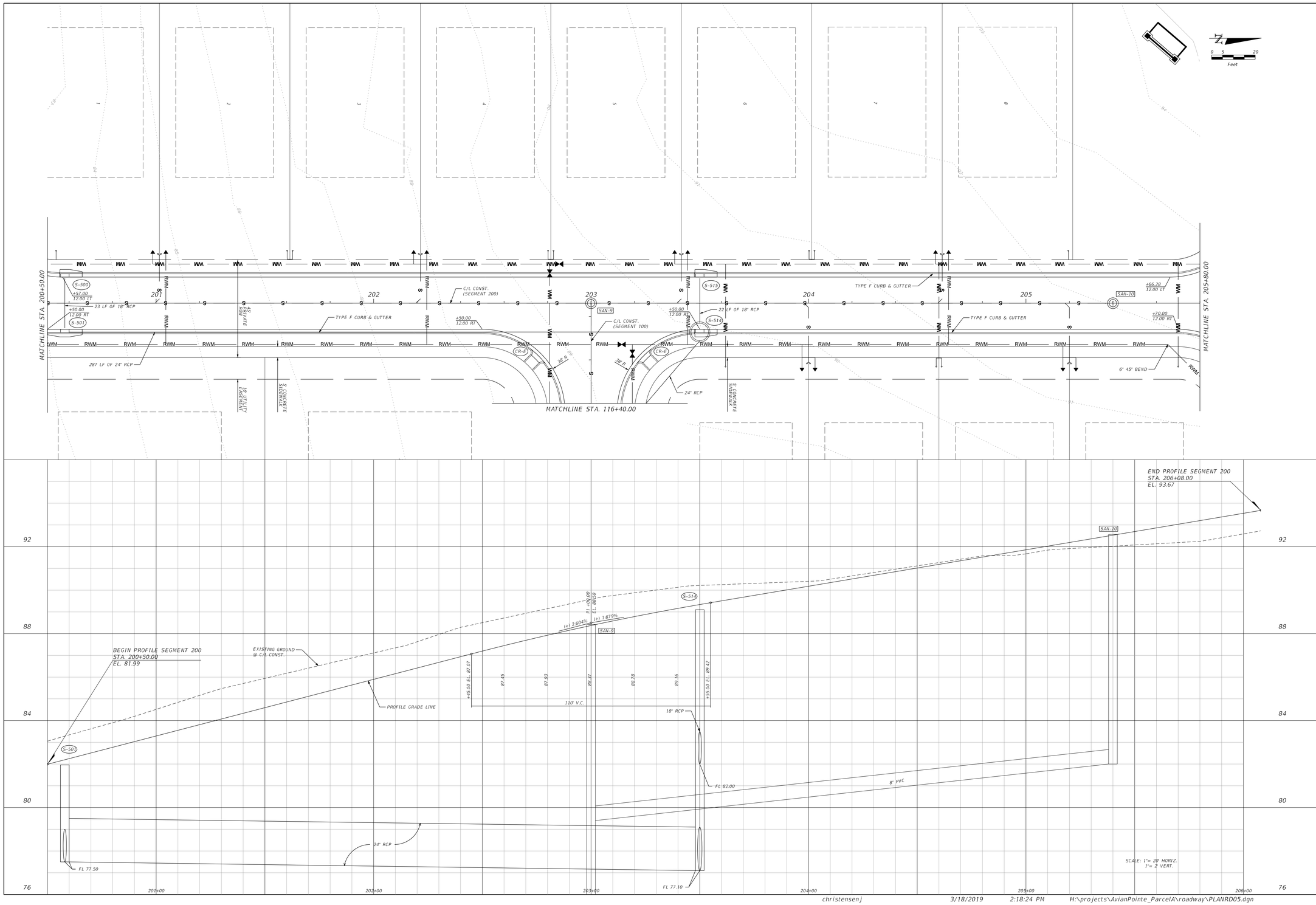

christensenj 3/18/2019 2:18:24 PM H:\projects\AvianPointe_ParcelA\roadway\PLANRD05.dgn

JOB #: 140138.20

PRJ. MGR.: JRC

DESIGNER: JRC

CHECKED: FWA

ENGINEER
JUSTIN R. CHRISTENSEN, P.E.
FL. LIC. #83288

DATE: Feb. 19, 2019

NO.	DATE	REVISIONS

RECORD DRAWING

THIS RECORD DRAWING IS BASED ON WRITTEN INFORMATION OR LIMITED PERIODIC FIELD OBSERVATIONS DURING CONSTRUCTION. IT DOES NOT CONTAIN ALL OF THE INFORMATION REQUIRED TO INDICATING CHANGES INCORPORATED DURING CONSTRUCTION, WHICH MAY BE REQUIRED TO DETERMINE COMPLIANCE WITH THE WASTEWATER SYSTEMS. ALTHOUGH THE ACCURACY CAN NOT BE GUARANTEED, THE INFORMATION SHOWN HEREON ON THIS DRAWING IS CORRECT TO THE BEST OF HIS/HER KNOWLEDGE.

ENGINEER:
FL LIC. #

PARCEL A
AT
AVIAN POINTE
APOPKA, FLORIDA
FOR
APOPKA CLEAR LAKE INVESTMENTS, LLC

PLAN AND PROFILE
SHEET (SEGMENT 200)

NV5
201 S. BUMBY AVE.
ORLANDO, FL
(407) 896-3317
WWW.NV5.COM
CERTIFICATE OF AUTHORIZATION # 29905

SHEET
11

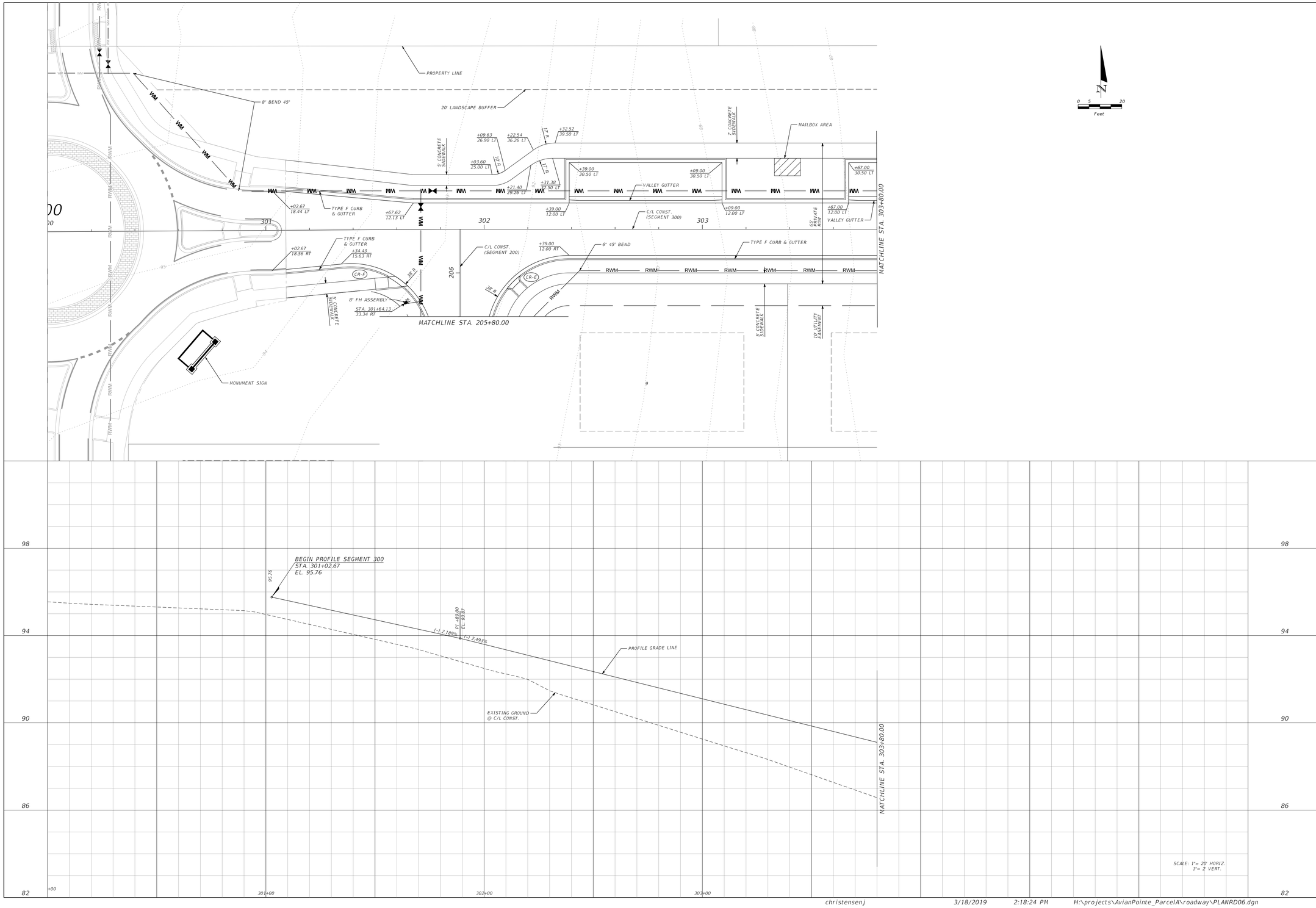

JOB #: 140138.20

PRJ. MGR.: JRC

DESIGNER: JRC

CHECKED: FWA

ENGINEER
JUSTIN C. CHRISTENSEN, P.E.
FL. LIC. #83288

DATE: Feb. 19, 2019

NO.	DATE	REVISIONS

RECORD DRAWING

THIS RECORD DRAWING IS BASED ON A REVIEW OF LIMITED PERIODIC FIELD OBSERVATIONS DURING CONSTRUCTION. A REVIEW OF CONTRACTOR'S WORK AS-BUILTS, WHICH INDICATING CHANGES INCORPORATED DURING CONSTRUCTION, WAS NOT PERFORMED. THE LOCATIONS OF STORM SEWER, WASTEWATER SYSTEMS, ALTHOUGH THE ACCURACY CAN NOT BE GUARANTEED, IS SHOWN HEREIN AS INDICATED. THIS DRAWING IS CORRECT TO THE BEST OF HIS/HER KNOWLEDGE.

ENGINEER:
FL LIC. #

PARCEL A
AVIAN POINTE
APOPKA, FLORIDA
FOR
APOPKA CLEAR LAKE INVESTMENTS, LLC

PLAN AND PROFILE
SHEET (SEGMENT 300)

NV5
201 S. BUMBY AVE.
ORLANDO, FL
(407) 896-3317
WWW.NV5.COM
CERTIFICATE OF AUTHORIZATION # 29065

SHEET
12

christensenj 3/18/2019 2:18:24 PM H:\projects\AvianPointe_ParcelA\roadway\PLANRD06.dgn

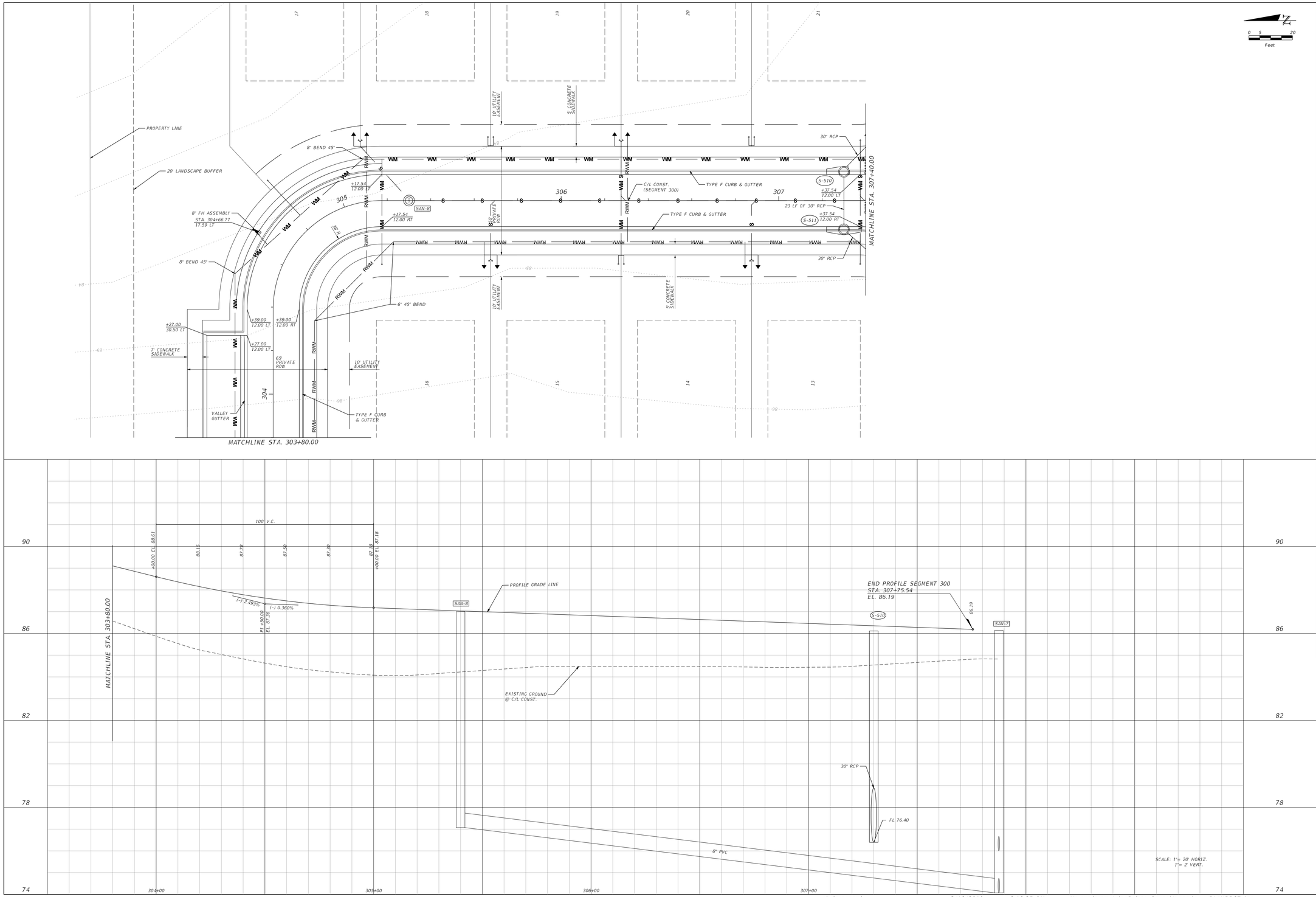

JOB #: 140138.20

PRJ. MGR: JRC

DESIGNER: JRC

CHECKED: FWA

ENGINEER
JUSTIN R. CHRISTENSEN, P.E.
FL LIC. #83288

DATE: Feb. 19, 2019

NO.	DATE	REVISIONS

RECORD DRAWING

THIS RECORD DRAWING IS BASED ON WHAT WAS TO BE IMPRINTED PERIODIC FIELD OBSERVATIONS DURING CONSTRUCTION. A REVIEW OF CONTRACTOR DRAWINGS SUBMITTED TO THE ENGINEER INDICATING CHANGES INCORPORATED DURING CONSTRUCTION, WERE MADE TO THE ENGINEER'S DESIGN DRAWINGS FOR THE WATER, WASTEWATER SYSTEMS. ALTHOUGH THE ACCURACY CAN NOT BE GUARANTEED, THE INFORMATION SHOWN ON THIS RECORD DRAWING IS CORRECT TO THE BEST OF HIS/HER KNOWLEDGE.

ENGINEER:
FL LIC. #

PARCEL A
AT
AVIAN POINTE
APOPKA, FLORIDA
FOR
APOPKA CLEAR LAKE INVESTMENTS, LLC

PLAN AND PROFILE
SHEET (SEGMENT 300)

NV5
201 S. BUMBY AVE.
ORLANDO, FL
(407) 898-3317
WWW.NV5.COM
CERTIFICATE OF AUTHORIZATION # 29005

SHEET
13

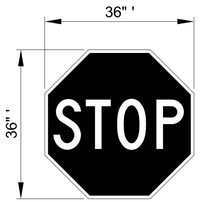

WHITE LEGEND RED BACKGROUND
HIGH REFLECTIVE INTENSITY

R1-1

"STOP" SIGN DETAIL

N.T.S.

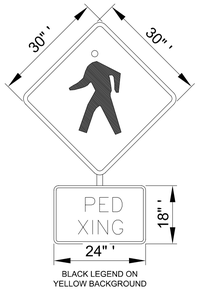

BLACK LEGEND ON
YELLOW BACKGROUND

W11A-2
W11A-2P

"PEDESTRIAN CROSSING"
SIGN DETAIL

N.T.S.

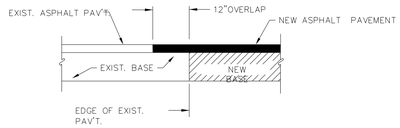

PAVEMENT SPLICE DETAIL

N.T.S.

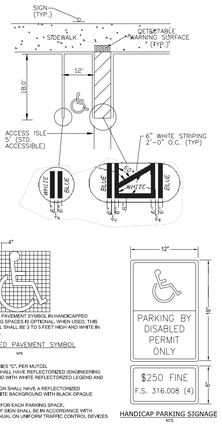

* USE OF PAVEMENT SYMBOL IN HANDICAPPED PARKING SPACES IS OPTIONAL, WHEN USED, THE SYMBOL SHALL BE 3 TO 3 FEET HIGH AND WHITE IN COLOR.

HANDICAPPED PAVEMENT SYMBOL

NTS

HANDICAP PARKING SIGNAGE

NTS

NOTES:
1. ALL LETTERS ARE 1' SERIES "C", PER MUTCD.
2. TOP PORTION OF SIGN SHALL HAVE REFLECTORIZED (ENGINEERING GRADE) BLUE BACKGROUND WITH WHITE REFLECTORIZED LEGEND AND BORDER.
3. BOTTOM PORTION OF SIGN SHALL HAVE A REFLECTORIZED (ENGINEERING GRADE) WHITE BACKGROUND WITH BLACK OPAQUE LEGEND AND BORDER.
4. ONE (1) SIGN REQUIRED FOR EACH PARKING SPACE.
5. INSTALLATION HEIGHT OF SIGN SHALL BE IN ACCORDANCE WITH SECTION 2A-23 OF THE MANUAL ON UNIFORM TRAFFIC CONTROL DEVICES (MUTCD).

PARKING LOT STRIPING DETAILS

NTS

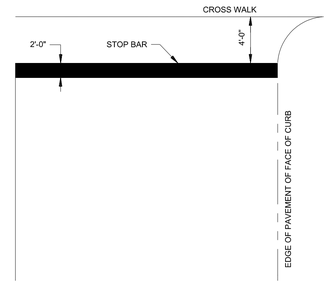

NOTE:
1. PAVEMENT STOP BARS ARE TO BE THERMOPLASTIC WHITE PAINT. ALL SIGNS SHALL COMPLY WITH U.S. DEPARTMENT OF TRANSPORTATION, FEDERAL HIGHWAY ADMINISTRATION'S "MANUAL OF UNIFORM TRAFFIC CONTROL DEVICES", LOCAL CODES AND AS SPECIFIED. MOUNT SIGNS TO POST IN ACCORDANCE WITH MANUFACTURER'S INSTRUCTIONS.

STOP BAR DETAIL

N.T.S.

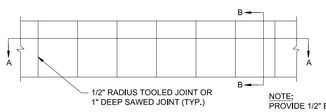

PLAN VIEW

NOTE:
PROVIDE 1/2" EXPANSION JOINT BETWEEN SIDEWALK AND ALL FIXED OBJECTS.

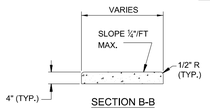

SECTION B-B

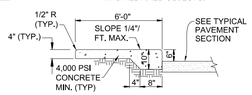

SECTION B-B (THICKENED EDGE)

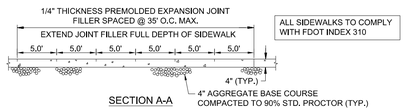

ALL SIDEWALKS TO COMPLY WITH FDOT INDEX 310

SECTION A-A

TYPICAL CONCRETE SIDEWALK DETAIL

N.T.S.

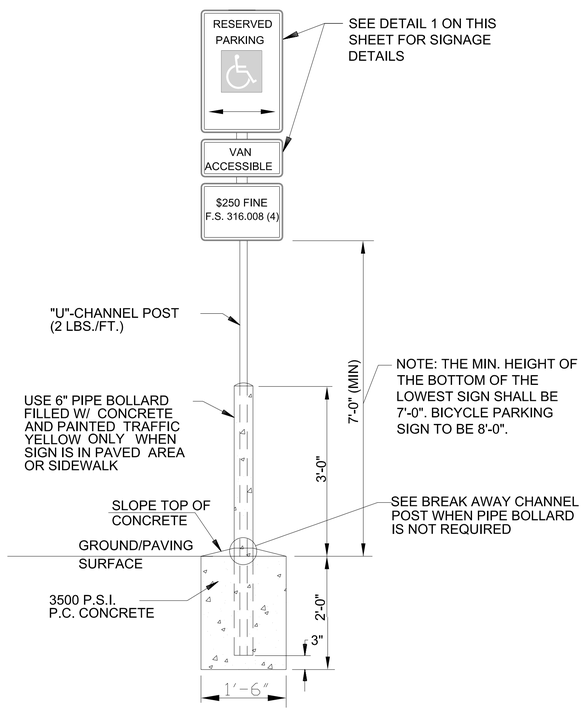

SIGN MOUNTING DETAIL

NTS

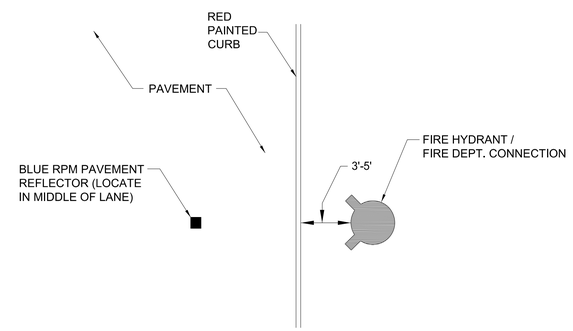

PAVEMENT MARKING AT FIRE HYDRANT / FDC DETAIL

N.T.S.

JOB #: 140138.20
PRJ. MGR.: JRC
DESIGNER: JRC
CHECKED: FWA

ENGINEER
JUSTIN R. CRUMBSTEN, P.E.
FL. LIC. #83288
DATE: Feb. 19, 2018

NO.	DATE	REVISIONS

PARCEL A
AT
AVIAN POINTE
APOPKA, FLORIDA
FOR
APOPKA CLEAR LAKE INVESTMENTS, LLC

GENERAL DETAILS

NV5
201 S. BUMBY AVE.
ORLANDO, FL
(407) 896-3317
WWW.NV5.COM
CERTIFICATE OF AUTHORIZATION # 29065

SHEET
14

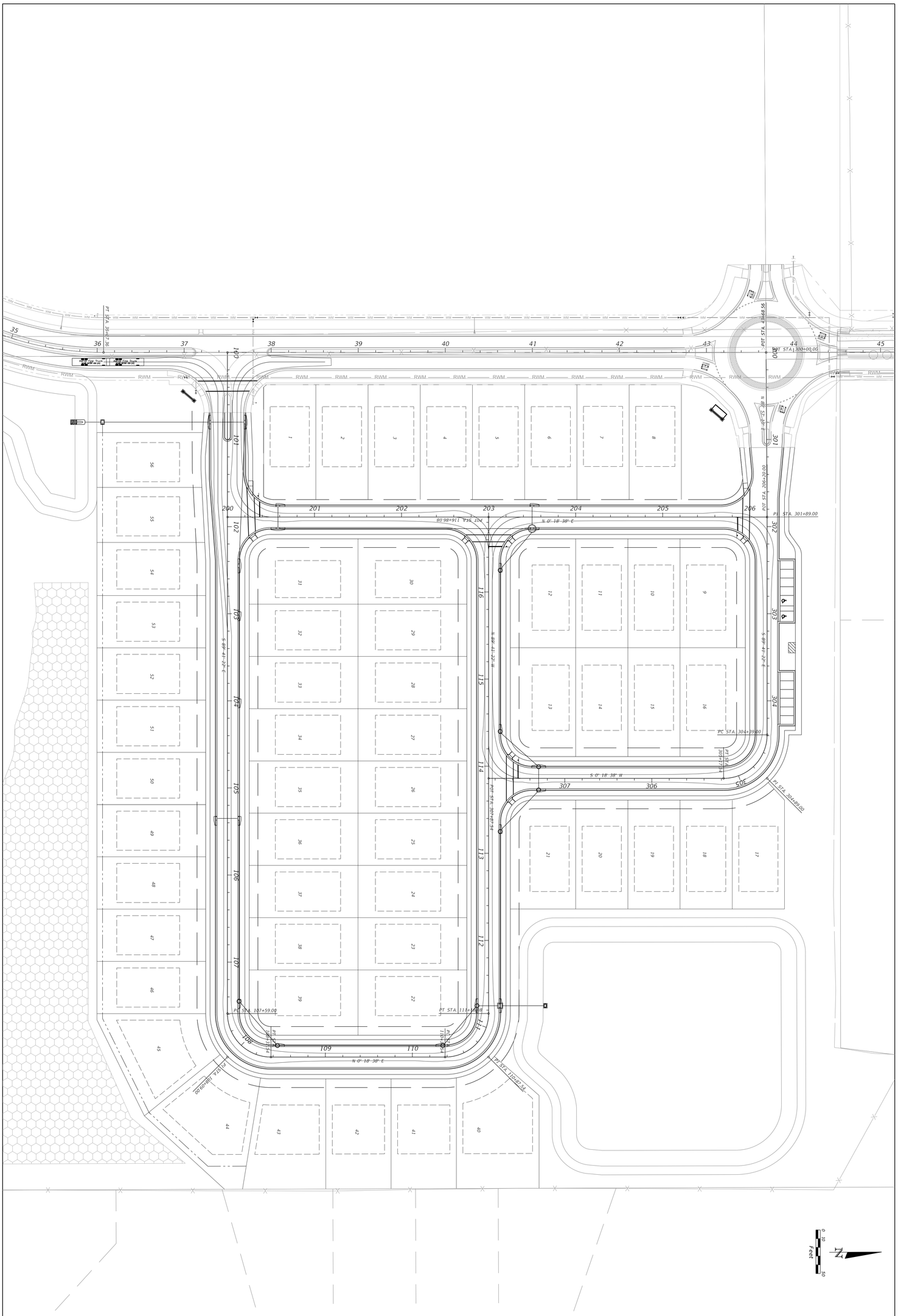

SHEET 15

N V 5

201 S. BUMBY AVE.
ORLANDO, FL
(407) 896-3317
WWW.NV5.COM

CERTIFICATE OF AUTHORIZATION # 29065

FIRE TRUCK ACCESS PLAN

PARCEL A
AT
AVIAN POINTE
APOPKA, FLORIDA
FOR
APOPKA CLEAR LAKE INVESTMENTS, LLC

NO.	DATE	REVISIONS

ENGINEER
JUSTIN R. CHRISTENSEN, P.E.
FL. LIC. #83288

DATE: Feb. 19, 2018

JOB #: *16058.20*
PRJ. MGR: *JRC*
DESIGNER: *JRC*
CHECKED: *FWA*

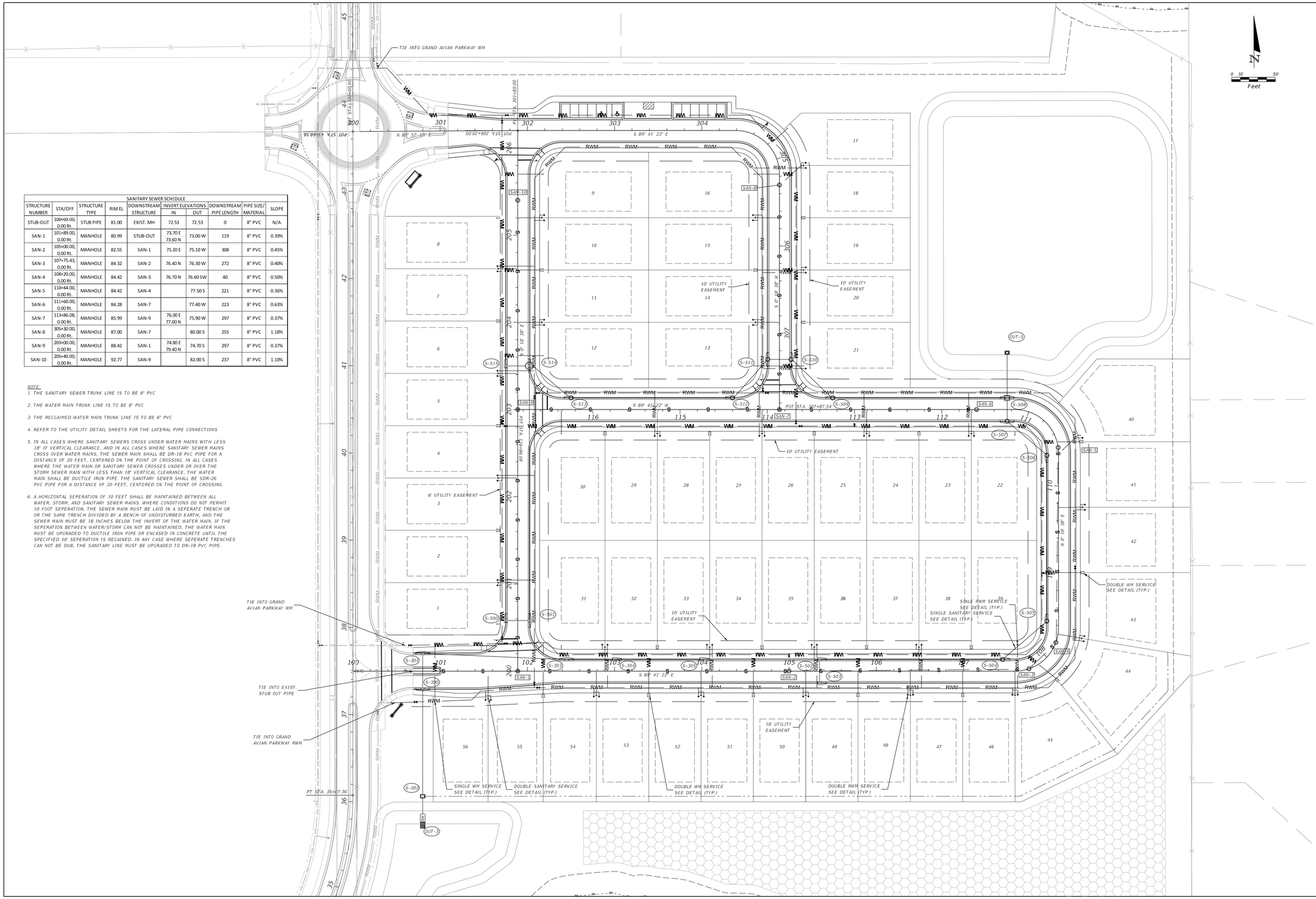

SANITARY SEWER SCHEDULE									
STRUCTURE NUMBER	STA/OFF	STRUCTURE TYPE	RIM EL	DOWNSTREAM STRUCTURE	INVERT ELEVATIONS IN	INVERT ELEVATIONS OUT	DOWNSTREAM PIPE LENGTH	PIPE SIZE/ MATERIAL	SLOPE
STUB-OUT	100+69.00, 0.00 Rt.	STUB PIPE	81.00	EXIST. MH	72.53	72.53	0	8" PVC	N/A
SAN-1	101+89.00, 0.00 Rt.	MANHOLE	80.99	STUB-OUT	73.70 E 73.60 N	73.00 W	119	8" PVC	0.39%
SAN-2	105+00.00, 0.00 Rt.	MANHOLE	82.55	SAN-1	75.20 E	75.10 W	308	8" PVC	0.45%
SAN-3	107+75.43, 0.00 Rt.	MANHOLE	84.32	SAN-2	76.40 N	76.30 W	272	8" PVC	0.40%
SAN-4	108+20.00, 0.00 Rt.	MANHOLE	84.42	SAN-3	76.70 N	76.60 SW	40	8" PVC	0.50%
SAN-5	110+44.00, 0.00 Rt.	MANHOLE	84.42	SAN-4		77.50 S	221	8" PVC	0.36%
SAN-6	111+60.00, 0.00 Rt.	MANHOLE	84.28	SAN-7		77.40 W	223	8" PVC	0.63%
SAN-7	113+86.08, 0.00 Rt.	MANHOLE	85.99	SAN-9	76.00 E 77.00 N	75.90 W	297	8" PVC	0.37%
SAN-8	305+30.00, 0.00 Rt.	MANHOLE	87.00	SAN-7		80.00 S	255	8" PVC	1.18%
SAN-9	203+00.00, 0.00 Rt.	MANHOLE	88.42	SAN-1	74.80 E 79.40 N	74.70 S	297	8" PVC	0.37%
SAN-10	205+40.00, 0.00 Rt.	MANHOLE	92.77	SAN-9		82.00 S	237	8" PVC	1.10%

NOTE:

1. THE SANITARY SEWER TRUNK LINE IS TO BE 8" PVC
2. THE WATER MAIN TRUNK LINE IS TO BE 8" PVC
3. THE RECLAIMED WATER MAIN TRUNK LINE IS TO BE 6" PVC
4. REFER TO THE UTILITY DETAIL SHEETS FOR THE LATERAL PIPE CONNECTIONS
5. IN ALL CASES WHERE SANITARY SEWERS CROSS UNDER WATER MAINS WITH LESS 18" IF VERTICAL CLEARANCE, AND IN ALL CASES WHERE SANITARY SEWER MAINS CROSS OVER WATER MAINS, THE SEWER MAIN SHALL BE DR-18 PVC PIPE FOR A DISTANCE OF 20 FEET, CENTERED ON THE POINT OF CROSSING. IN ALL CASES WHERE THE WATER MAIN OR SANITARY SEWER CROSSES UNDER OR OVER THE STORM SEWER MAIN WITH LESS THAN 18" VERTICAL CLEARANCE, THE WATER MAIN SHALL BE DUCTILE IRON PIPE. THE SANITARY SEWER SHALL BE SDR-26 PVC PIPE FOR A DISTANCE OF 20 FEET, CENTERED ON THE POINT OF CROSSING.
6. A HORIZONTAL SEPERATION OF 10 FEET SHALL BE MAINTAINED BETWEEN ALL WATER, STORM, AND SANITARY SEWER MAINS. WHERE CONDITIONS DO NOT PERMIT 10 FOOT SEPERATION, THE SEWER MAIN MUST BE LAID IN A SEPERATE TRENCH OR OR THE SAME TRENCH DIVIDED BY A BENCH OF UNDISTURBED EARTH, AND THE SEWER MAIN MUST BE 18 INCHES BELOW THE INVERT OF THE WATER MAIN. IF THE SEPERATION BETWEEN WATER/STORM CAN NOT BE MAINTAINED, THE WATER MAIN MUST BE UPGRADED TO DUCTILE IRON PIPE OR ENCASED IN CONCRETE UNTIL THE SPECIFIED 10' SEPERATION IS REGAINED. IN ANY CASE WHERE SEPERATE TRENCHES CAN NOT BE DUB, THE SANITARY LINE MUST BE UPGRADED TO DR-18 PVC PIPE.

JOB #: 140138.20
PRJ. MGR.: JRC
DESIGNER: JRC
CHECKED: FWA
DATE: Feb. 19, 2018

ENGINEER
JUSTIN R. CRAWFORD, P.E.
FL. LIC. #83288

NO.	DATE	REVISIONS

PARCEL A
AVIAN POINTE
APOPKA, FLORIDA
FOR
APOPKA CLEAR LAKE INVESTMENTS, LLC

UTILITY PLAN

NV5
201 S. BUMBY AVE.
ORLANDO, FL
(407) 896-3317
WWW.NV5.COM
CERTIFICATE OF AUTHORIZATION # 29085

SHEET
16

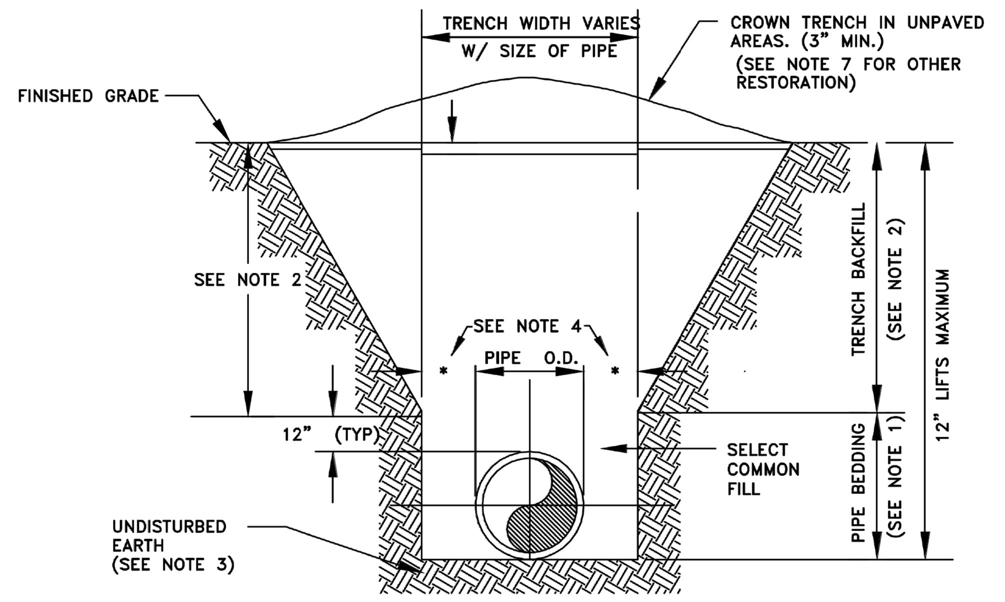

NOTES:

1. PIPE BEDDING: SELECT COMMON FILL COMPACTED TO 98% UNDER PAVEMENT OF THE MAXIMUM DENSITY AS PER AASHTO T-180.
2. TRENCH BACKFILL: COMMON FILL COMPACTED TO 98% UNDER PAVEMENT OF THE MAXIMUM DENSITY AS TO AASHTO T-180.
3. PIPE BEDDING UTILIZING SELECT COMMON FILL OR BEDDING ROCK IN ACCORDANCE WITH TYPE A BEDDING AND TRENCHING DETAIL MAY BE REQUIRED AS DIRECTED BY THE CITY.
4. (*): 15" MAX. FOR PIPE DIAMETERS LESS THAN 24", AND 24" FOR PIPE DIAMETER 24" AND LARGER.
5. WATER SHALL NOT BE PERMITTED IN THE TRENCH DURING CONSTRUCTION.
6. ALL PIPE TO BE INSTALLED WITH BELL FACING UPSTREAM TO THE DIRECTION OF THE FLOW.
7. FINAL RESTORATION IN IMPROVED AREAS SHALL BE IN COMPLIANCE WITH ALL APPLICABLE REGULATIONS OF GOVERNING AGENCIES.
8. SURFACE RESTORATION WITHIN CITY RIGHT-OF-WAY, SHALL COMPLY WITH REQUIREMENTS OF RIGHT-OF-WAY UTILIZATION REGULATIONS.
9. ALL UNPAVED DISTURBED AREAS SHALL BE SODDED TO MATCH ADJACENT DOMINATE GRASS SPECIES.

TYPE "B" BEDDING AND OPEN-CUT DETAIL

CITY OF APOPKA DESIGN ENGINEERING DIVISION	JANUARY 2014	FIG. 100

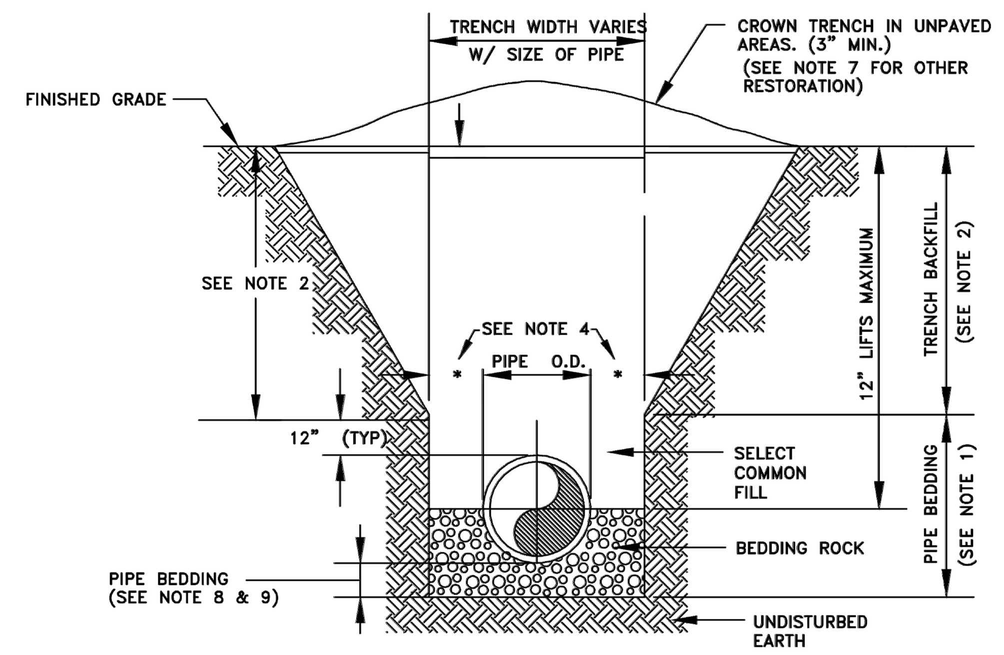

NOTES:

1. PIPE BEDDING: SELECT COMMON FILL COMPACTED TO 98% UNDER PAVEMENT OF THE MAXIMUM DENSITY AS PER AASHTO T-180.
2. TRENCH BACKFILL: COMMON FILL COMPACTED TO 98% UNDER PAVEMENT OF THE MAXIMUM DENSITY AS PER AASHTO T-180.
3. USE OF TYPE A BEDDING TO BE DETERMINED IN THE FIELD AS DIRECTED BY THE CITY.
4. (*): 15" MAX. FOR PIPE DIAMETER LESS THAN 24", AND 24" MAX. FOR PIPE DIAMETER 24" AND LARGER.
5. WATER SHALL NOT BE PERMITTED IN THE TRENCH DURING CONSTRUCTION.
6. ALL PIPE TO BE INSTALLED WITH BELL FACING UPSTREAM TO THE DIRECTION OF THE FLOW.
7. GRAVITY SEWERS SHALL UTILIZE TYPE A BEDDING IF REQUIRED BY THE CITY. BEDDING DEPTH SHALL BE 4" MINIMUM FOR PIPE DIAMETER LESS THAN 15" AND 6" MINIMUM FOR PIPE DIAMETER 16" AND LARGER.
8. DEPTH FOR REMOVAL OF UNSUITABLE MATERIAL SHALL GOVERN DEPTH OF BEDDING ROCK BELOW THE PIPE. THE CITY SHALL DETERMINE IN THE FIELD IF REMOVAL OF UNSUITABLE MATERIAL IS REQUIRED TO REACH A SUITABLE FOUNDATION.
9. ALL UNPAVED DISTURBED AREAS SHALL BE SODDED TO MATCH ADJACENT DOMINATE GRASS SPECIES.
10. FINAL RESTORATION IN IMPROVED AREAS SHALL BE IN COMPLIANCE WITH ALL APPLICABLE REGULATIONS OF THE GOVERNING AGENCIES. SURFACE RESTORATION WITHIN CITY RIGHT-OF-WAY, SHALL COMPLY WITH REQUIREMENTS OF RIGHT-OF-WAY UTILIZATION REGULATIONS.

TYPE "A" BEDDING AND OPEN-CUT DETAIL

CITY OF APOPKA DESIGN ENGINEERING DIVISION	JANUARY 2014	FIG. 101

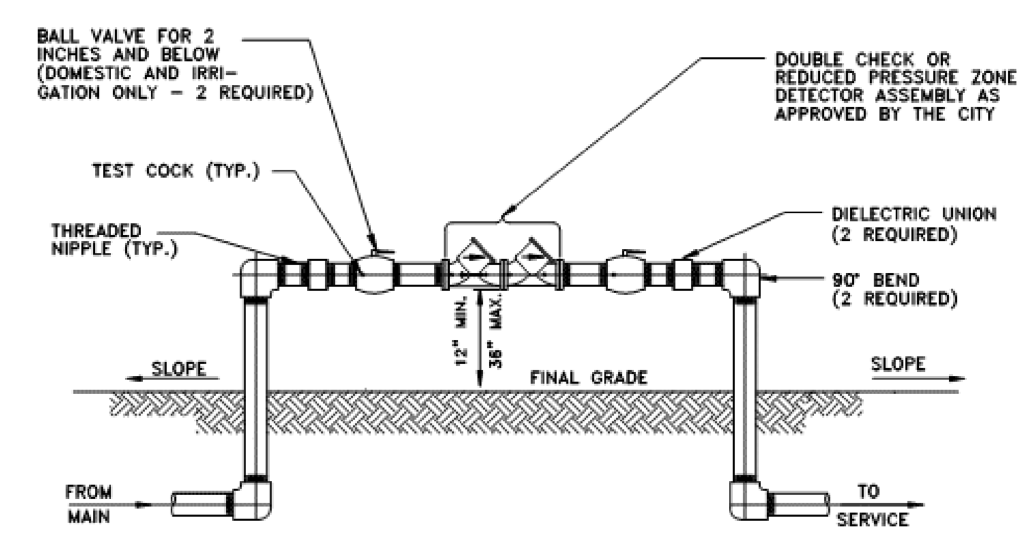

NOTES:

1. ALL PIPE FITTINGS, MATERIALS, LABOR, AND APPURTENANCES SHALL BE SUPPLIED BY THE CONTRACTOR.
2. ALL PIPE AND FITTINGS TWO (2) INCHES AND SMALLER SHALL BE THREADED SCHEDULE 40 GALVANIZED STEEL.

DOUBLE CHECK OR REDUCED PRESSURE ZONE DETECTOR ASSEMBLY

2 INCH AND BELOW ASSEMBLY

CITY OF APOPKA DESIGN ENGINEERING DIVISION	JANUARY 2014	FIG. 500 A

PROPOSED UTILITY	HORIZONTAL & VERTICAL SEPARATION REQUIREMENTS									
	POTABLE WATER		RECLAIMED WATER*		SANITARY SEWER FORCE MAIN		SANITARY SEWER GRAVITY MAIN		STORM SEWER	
	HORIZ.	VERT.	HORIZ.	VERT.	HORIZ.	VERT.	HORIZ.	VERT.	HORIZ.	VERT.
POTABLE WATER	–	–	3'	12"	6'	12"	6'	6"ABOVE 12"BELOW	3'	6"
RECLAIMED* WATER	3'	12"	–	–	3'	12"	3'	12"	–	–
SANITARY SEWER FORCE MAIN	6'	12"	3'	12"	–	–	–	–	–	–
SANITARY SEWER GRAVITY MAIN	6'	6"ABOVE 12"BELOW	3'	12"	–	–	–	–	–	–

GENERAL NOTES:

1. THE TABLE REPRESENTS THE MINIMUM SEPARATION REQUIREMENTS AS DESCRIBED IN F.D.E.P. RULES OF THE FLORIDA ADMINISTRATION CODE (F.A.C.). THESE SEPARATION REQIREMENTS SHALL APPLY BETWEEN NEWLY PROPOSED UTILITY LINES AND EXISTING OR PROPOSED UTILITY LINES.
*2. FOR THE PURPOSE OF THIS TABLE, RECLAIMED WATER SHALL MEAN UNRESTRICTED PUBLIC ACCESS REUSE WATER AS DEFINED BY F.A.C. 17-610. OTHER TYPES OF RECLAIMED WATER ARE CONSIDERED RAW SEWAGE AND SEPARATIONS LISTED FOR SANITARY SEWER SHALL APPLY.
3. ALL SEPARATION DISTANCES ARE FROM OUTSIDE OF PIPE TO OUTSIDE OF PIPE UNLESS OTHERWISE SPECIFIED. CRITERION PRODUCING GREATER CLEARANCE SHALL BE USED.

   C/C – DENOTES CENTER OF PIPE TO CENTER OF PIPE.

   O/O – DENOTES OUTSIDE OF PIPE TO OUTSIDE OF PIPE.
4. ACCEPTABLE VARIANCES:
   A. WHERE HORIZONTAL SEPARATION IS NOT ATTAINABLE, PVC-C-900 SDR-14 OR CONCRETE ENCASEMENT MUST BE USED FOR THE SANITARY SEWER LINE FOR AT LEAST ONE OF THE PIPES. PVC-C-900 SDR 14 OR CONCRETE ENCASEMENT MUST BE USED UNTIL MINIMUM CLEARANCE IS REGAINED.
   B. WHERE 18 INCH VERTICAL SEPARATION IS NOT ATTAINABLE AT CROSSINGS, USE ONE FULL LENGTH OF PVC-C-900 SDR-14 FOR SANITARY SEWERS OR ENCASED PIPE CENTERED AT THE POINT OF CROSSING SPECIAL SUPPORT MAY BE REQUIRED.
5. NO WATER PIPE SHALL PASS THROUGH OR COME IN CONTACT WITH ANY PART OF A SANITARY OR STORM WATER MANHOLE OR STRUCTURE.
6. CONCRETE ENCASEMENT SHALL NOT BE USED UNLESS APPROVED BY PUBLIC SERVICES DIRECTOR OR HIS DESIGNEE.

HORIZONTAL & VERTICAL SEPARATION REQUIREMENTS

CITY OF APOPKA DESIGN ENGINEERING DIVISION	JANUARY 2014	FIG. 104

MINIMUM LENGTH (FT) TO BE RESTRAINED ON EACH SIDE OF FITTING(S). *

	PIPE SIZE										
	6"	8"	10"	12"	16"	18"	20"	24"	30"	36"	48"
90° BEND	33	43	51	60							
45° BEND	14	18	22	25							
22-1/2° BEND	7	9	11	12							
11-1/4° BEND	4	5	6	6							
TEE**	1	7	24	44							
REDUCER (ONE SIZE SMALLER)		41	39	40							
DEAD END	74	96	115	136							

* ONLY RESTRAIN BRANCH PIPE FOR TEES. ONLY RESTRAIN LARGER PIPE FOR REDUCERS
** LENGTH ALONG RUN ASSUMED TO BE 18'

NOTES:

1. FITTINGS SHALL BE DUCTILE IRON RESTRAINED JOINT TYPE. FM FITTINGS TO BE LINE WITH PROTECTO 401.
2. INSTALL FULL LENGTHS OF PIPE WITH TOTAL LENGTH CONTAINING ONLY RESTRAINED JOINTS EQUAL TO OR GREATER THAN LENGTH SHOWN IN TABLE.
3. WHERE TWO OR MORE FITTINGS ARE TOGETHER, USE FITTING WHICH YIELDS GREATEST LENGTH OF RESTRAINED PIPE.
4. IN LINE VALVES AND THROUGH RUN OF TEES OUTSIDE LIMITS OF RESTRAINED JOINTS FROM OTHER FITTINGS NEED NOT BE RESTRAINED UNLESS OTHERWISE INDICATED.
5. LENGTHS SHOWN IN THE TABLE HAVE BEEN CALCULATED IN ACCORDANCE WITH THE PROCEDURE OUTLINED IN "THRUST RESTRAINT DESIGN FOR DUCTILE IRON PIPE" AS PUBLISHED BY DIPRA, FOR PVC WITH THE FOLLOWING ASSUMPTIONS:
   TYPE OF PIPE: PVC
   WORKING PRESSURE: 150 P.S.I.**
   SOIL DESIGNATION: SM(SAND SILT)
   LAYING CONDITIONS: 3
   ** FM = 100 P.S.I. / WM OR RWM = 150 P.S.I.
6. FOR PIPE ENCASED IN POLYETHYLENE INCREASE THE GIVEN VALUE BY A FACTOR OF 1.5.
7. VALUES NOT LISTED IN THE TABLE TO BE COMPLETED BY THE ENGINEER.

RESTRAINED PIPE TABLE (PVC)

MINIMUM LENGTH (FT) TO BE RESTRAINED ON EACH SIDE OF FITTING(S). *

	PIPE SIZE										
	6"	8"	10"	12"	16"	18"	20"	24"	30"	36"	48"
90° BEND					61	67	73	84	100	114	
45° BEND					26	28	31	35	42	48	
22-1/2° BEND					13	14	15	17	20	23	
11-1/4° BEND					6	7	8	9	10	12	
TEE**					52	62	74	95	124	152	
REDUCER (ONE SIZE SMALLER)					48	25	25	47	66	66	
DEAD END					111	123	135	157	188	218	

* ONLY RESTRAIN BRANCH PIPE FOR TEES. ONLY RESTRAIN LARGER PIPE FOR REDUCERS
** LENGTH ALONG RUN ASSUMED TO BE 18'

NOTES:

1. FITTINGS SHALL BE RESTRAINED JOINT TYPE. FM FITTINGS TO BE LINED WITH PROTECTO 401.
2. INSTALL FULL LENGTHS OF PIPE WITH TOTAL LENGTH CONTAINING ONLY RESTRAINED JOINTS EQUAL TO OR GREATER THAN LENGTH SHOWN IN TABLE.
3. WHERE TWO OR MORE FITTINGS ARE TOGETHER, USE FITTING WHICH YIELDS GREATEST LENGTH OF RESTRAINED PIPE.
4. IN LINE VALVES AND THROUGH RUN OF TEES OUTSIDE LIMITS OF RESTRAINED JOINTS FROM OTHER FITTINGS NEED NOT BE RESTRAINED UNLESS OTHERWISE INDICATED.
5. LENGTHS SHOWN IN THE TABLE HAVE BEEN CALCULATED IN ACCORDANCE WITH THE PROCEDURE OUTLINED IN "THRUST RESTRAINT DESIGN FOR DUCTILE IRON PIPE" AS PUBLISHED BY DIPRA, WITH THE FOLLOWING ASSUMPTIONS:
   TYPE OF PIPE: DI
   WORKING PRESSURE: 150 P.S.I.**
   SOIL DESIGNATION: SM(SAND SILT)
   LAYING CONDITIONS: 3
   ** FM = 100 P.S.I. / WM OR RWM = 150 P.S.
6. VALUES NOT LISTED IN THE TABLE TO BE COMPLETED BY THE ENGINEER.

RESTRAINED PIPE TABLE (DI)

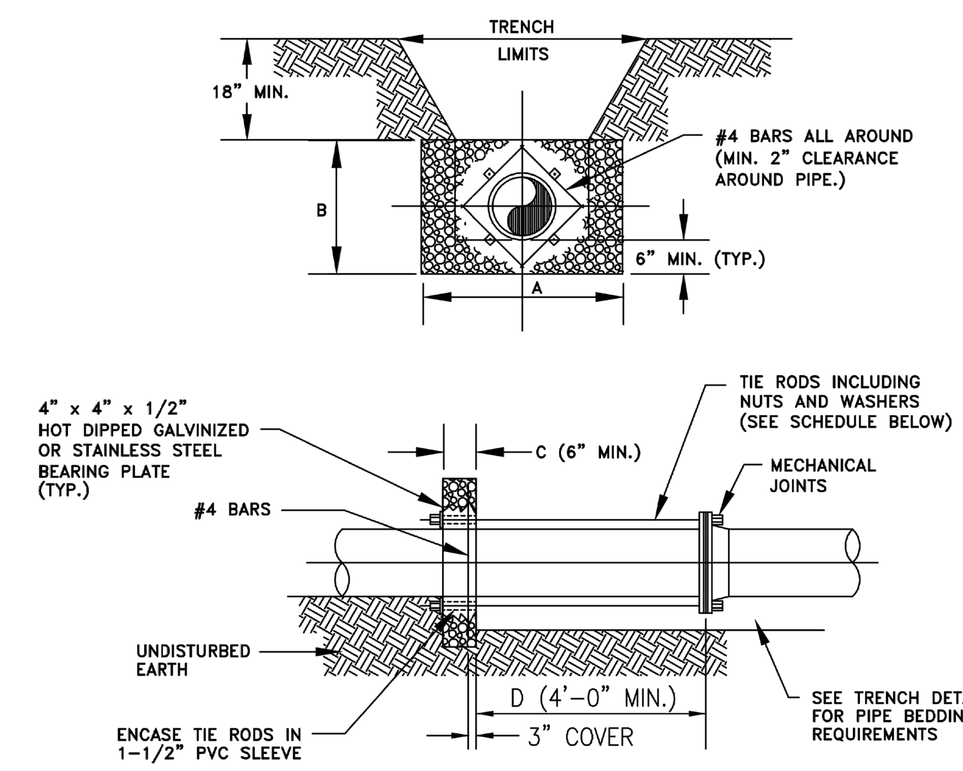

NOTES:

1. ADDITIONAL REINFORCEMENTS SHALL BE AS SPECIFIED BY THE ENGINEER.
2. MINIMUM COMPRESSIVE STRENGTH FOR CONCRETE SHALL BE 2500 P.S.I.
3. BEDDING, BACKFILL, AND COMPACTION SHALL BE AS SPECIFIED ELSEWHERE IN THE STANDARD DRAWINGS.
4. ALL FORM BOARDS SHALL BE REMOVED PRIOR TO BACKFILL.
5. NO ALLOWANCE SHALL BE MADE FOR FRICTION BETWEEN THE PIPE WALL AND THE THRUST COLLAR.
6. DESIGN PRESSURE: 150 P.S.I.

SCHEDULE OF DIMENSIONS AND MATERIALS *

PIPE SIZE (INCHES)	DIMENSIONS (FT.)				TIE RODS REQ'D	
	A	B	C	D	DIA.	NO.
6	2.0	2.0	1.0		3/4	2
8	2.5	2.5	1.0		3/4	2
10	3.5	3.0	1.0		3/4	4
12	5.0	3.0	1.0		3/4	4
16	6.0	4.0	1.5		3/4	4
20	8.0	5.0	1.5		3/4	6
24	9.0	6.0	1.5		3/4	8

NOTE: THRUST BLOCK AREAS TO BE COMPUTED ON BASIS OF 2,000 LBS. PER SQ. FT. SOIL RESTRAINT BEARING. (1,500 MIN) SEE NOTE 5
* TO BE COMPLETED BY ENGINEER.

WATER MAIN THRUST COLLAR DETAIL

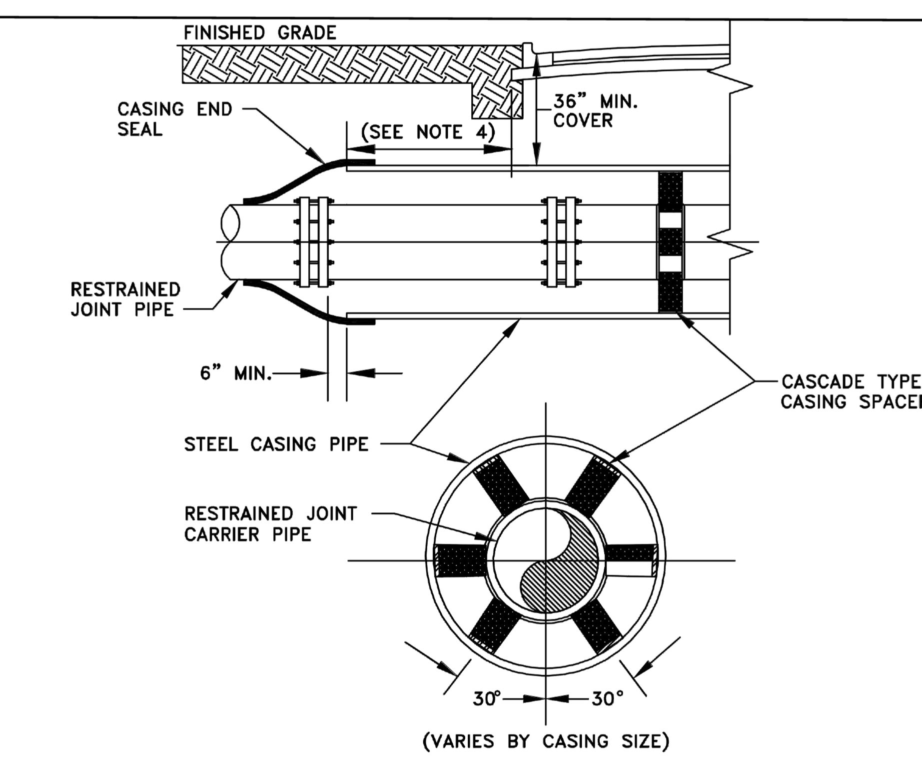

(VARIES BY CASING SIZE)

CARRIER PIPE NOMINAL DIAMETER	4	6	8	10	12	16	20	24	30	36	42
MINIMUM CASING OUTSIDE DIAMETER (INCHES)	16	16	18	20	24	30	36	42	48	54	60
MINIMUM CASING WALL THICKNESS (INCHES)	.250"	.250"	.250"	.250"	.250"	.312"	.375"	.500"	.500"	.500"	.500"

NOTES:

1. WHEN CONSTRUCTION IS WITHIN FDOT OR RAILROAD JURISDICTION, ADDITIONAL REQUIREMENTS SHALL BE MET.
2. DISTANCE BETWEEN SPACERS TO BE PER MANUFACTURER'S SPECIFICATIONS.
3. NO FLOWABLE FILL BETWEEN THE ANNULAR SPACE OF THE CASING OR CARRIER PIPE.
4. WHERE PRACTICAL, CASING SHALL EXTEND 10 FEET BEYOND EDGE OF PAVEMENT AND SHALL NOT BE LESS THAN 6 FEET BEYOND EDGE OF PAVEMENT IN ANY CASE. THE CITY MAY REQUIRE LONGER CASING FOR DEEPER BORES.

BORING AND JACKING DETAIL

JOB #: 16058.20
PRJ. MGR: JRC
DESIGNER: JRC
CHECKED: FWA

ENGINEER
JUSTIN R. CHRISTENSEN, P.E.
FL. LIC. #83288
DATE: Feb. 19, 2018

NO.	DATE	REVISIONS

PARCEL A
AT
AVIAN POINTE
APOPKA, FLORIDA
FOR
APOPKA CLEAR LAKE INVESTMENTS, LLC

UTILITY DETAILS 1

NV5
201 S. BUMBY AVE.
ORLANDO, FL
(407) 896-3317
WWW.NV5.COM
CERTIFICATE OF AUTHORIZATION # 29065

SHEET
17

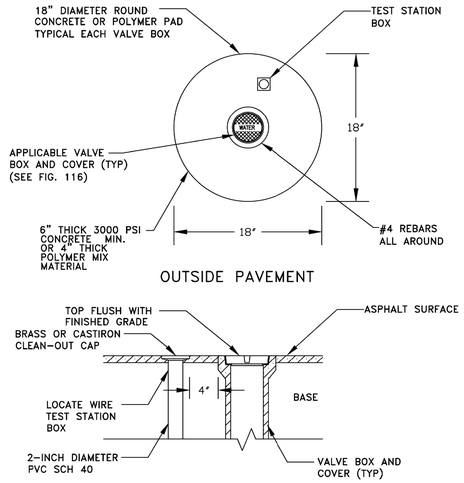

VALVE IDENTIFICATION TAG TO BE INSTALLED BY CITY & PAID FOR BY DEVELOPER

VALVE BOX

CITY OF APOPKA
DESIGN ENGINEERING DIVISION | JANUARY 2014 | FIG. 109

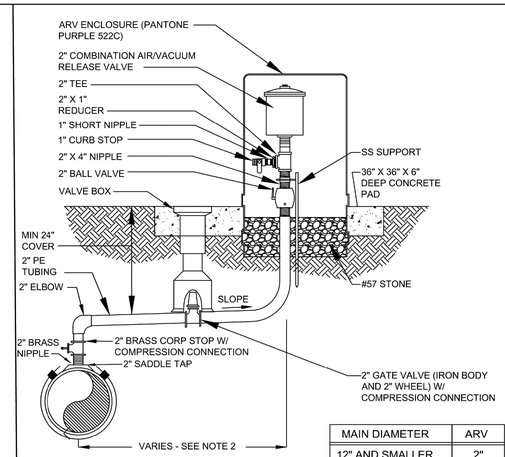

MAIN DIAMETER	ARV
12" AND SMALLER	2"
16"	3"
20", 24"	4"
30", 36"	6"

NOTES:
1. FOR RECLAIMED WATER USE ONLY.
2. OFFSET DISTANCE TO BE FIELD DETERMINED AND AS CLOSE TO THE R/W LINE AS POSSIBLE
3. ADJUST HORIZONTAL LOCATION OF SIDEWALK, AS REQUIRED TO AVOID ARV ENCLSOURE.
4. LOCATE ARV ENCLOSURE WITHIN 6" OF R/W LINE.

OFFSET COMBINATION AIR/VACUUM RELEASE VALVE DETAIL - RECLAIMED WATER ONLY

CITY OF APOPKA
DESIGN ENGINEERING DIVISION | JANUARY 2014 | FIG. 113

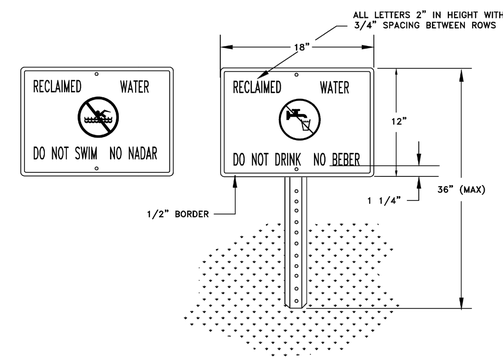

NOTES:
1. HEIGHT OF SIGN WILL DEPEND ON LOCATION AND SURROUNDING LANDSCAPE PLANT TYPES. IN ALL CASES, THE SIGN SHALL BE VISIBLE TO THE PUBLIC.
2. BACKGROUND SHALL BE WHITE. LETTERS AND FIGURES SHALL BE BLACK. PROHIBITIVE SYMBOL SHALL BE RED.
3. ENGINEERING GRADE REFLECTIVE MATERIALS SHALL BE USED.
4. POST SHALL BE U CHANNEL 12 FT. 2 LB. HOT ROLLED HIGH TENSILE RAIL OR BILLET STEEL, HOT DIP GALVANIZED PER ASTM A-123.
5. MOUNTING HARDWARE SHALL BE STAINLESS STEEL.
6. SIGNS SHALL BE PLACED BY THE CONTRACTOR IN ACCORDANCE WITH THE CITY APPROVED ENGINEERING PLANS AND/OR AS APPROVED BY PUBLIC SERVICES DEPARTMENT.

RECLAIMED WATER ADVISORY SIGN

CITY OF APOPKA
DESIGN ENGINEERING DIVISION | JANUARY 2014 | FIG. 115

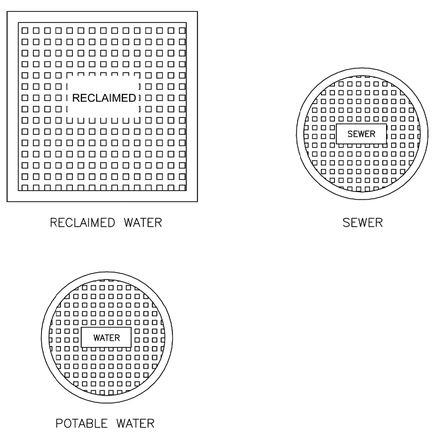

TYPICAL VALVE BOX COVER DETAILS

CITY OF APOPKA
DESIGN ENGINEERING DIVISION | JANUARY 2014 | FIG. 116

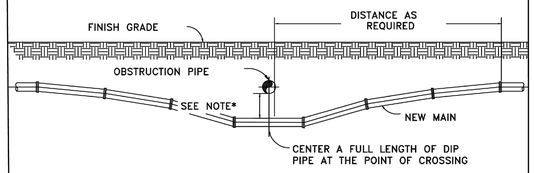

NOTES:
1. 18" MINIMUM CLEARANCE FOR WATER, SEWER AND RECLAIMED WATER MAIN CROSSINGS
2. 12" MINIMUM CLEARANCE REQUIRED FOR OTHER TYPE UTILITY CROSSINGS.
3. SEE ENCASEMENT DETAIL IF MINIMUM CLEARANCE CANNOT BE OBTAINED.

* CONSTRUCT UNIFORM PIPE DEFLECTION NOT TO EXCEED 75% OF MANUFACTURER RECOMMENDED MAXIMUM DEFLECTION PER PIPE JOINT

UTILITY CROSSING PIPE DEFLECTION DETAIL

CITY OF APOPKA
DESIGN ENGINEERING DIVISION | JANUARY 2014 | FIG. 117

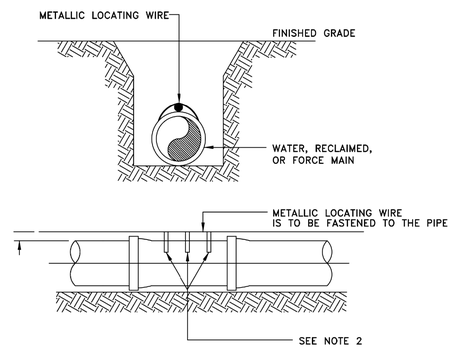

NOTES:
1. ALL PIPE SHALL REQUIRE INSULATED METALLIC LOCATING WIRE (10 AWG-SOLID CCS REINFORCED TRACER WIRE-INSULATED 30 MIL HDPE - 30 VOLT MFG. BY COPPERHEAD INDUSTRIES, LLC OR EQUAL) CAPABLE OF DETECTION BY A CABLE LOCATOR.
2. SHALL BE BURIED DIRECTLY ABOVE THE CENTERLINE OF THE PIPE AND ATTACHED WITH DUCT TAPE OR NYLON STRAPS AT 3 LOCATIONS PER JOINT. LOCATING WIRE SHALL TERMINATE AT THE TEST STATION BOX AS SHOWN IN FIG. 109.
3. BE CAPABLE OF EXTENDING 12" ABOVE TOP OF TEST STATION BOX IN SUCH A MANNER SO AS NOT TO INTERFERE WITH VALVE OPERATION.
4. SPLICES SHOULD BE MADE USING STANDARDS AND PRODUCTS DESIGNED FOR DIRECT BURIAL CONDUCTORS.
5. WIRE INSULATION SHALL BE COLOR CODED FOR THE TYPE OF PIPE BEING INSTALLE

PIPE LOCATING WIRE DETAIL

CITY OF APOPKA
DESIGN ENGINEERING DIVISION | JANUARY 2014 | FIG. 118

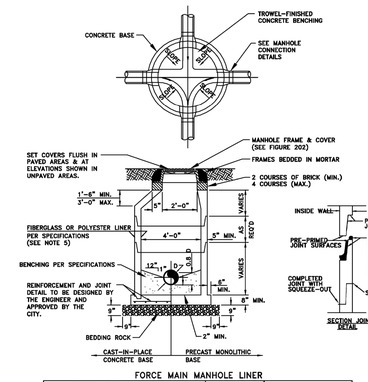

FORCE MAIN MANHOLE LINER

THICKNESS (INCHES)				MATERIAL	MANUFACTURER
DIAMETER (INCHES)	HEIGHT (FEET) 3-6	7-12	13-17		
48					
60					
72					

* TO BE COMPLETED BY THE ENGINEER

NOTES:
1. MANHOLE SHOWN IS FOR SEWER SIZE 8" THRU 24". SEE SECTION 20.4 OF THE MANUAL FOR MANHOLE DIAMETER FOR SEWERS LARGER THAN 24".
2. DROP CONNECTIONS ARE REQUIRED WHENEVER INVERT OF INFLUENT SEWER IS 24" OR MORE ABOVE THE INVERT OF THE MANHOLE. SEE MANHOLE CONNECTION DETAILS.
3. THE THICKNESS OF THE LINER SHALL BE 3/8" MINIMUM
4. EACH BENCH WALL SHALL BE A MINIMUM OF 18 INCHES LONG FROM THE WALL OF THE MANHOLE TOWARD THE CENTER.
5. SANITARY SEWER MANHOLES MAY BE REQUIRED TO BE LINED WITH HDPE OR FIBERGLASS AS DIRECTED BY THE CITY.

TYPICAL MANHOLE

CITY OF APOPKA
DESIGN ENGINEERING DIVISION | JANUARY 2014 | FIG. 200

JOB #: 140138.20
PRJ. MGR.: JRC
DESIGNER: JRC
CHECKED: FWA
DATE: Feb. 19, 2018

ENGINEER
JUSTIN R. CARPENTER, P.E.
FL. LIC. #83298

NO.	DATE	REVISIONS

PARCEL A
AVIAN POINTE
APOPKA, FLORIDA
FOR
APOPKA CLEAR LAKE INVESTMENTS, LLC

UTILITY DETAILS 2

NV5
201 S. BUMBY AVE.
ORLANDO, FL
(407) 898-3317
WWW.NV5.COM
CERTIFICATE OF AUTHORIZATION # 29005

SHEET
18

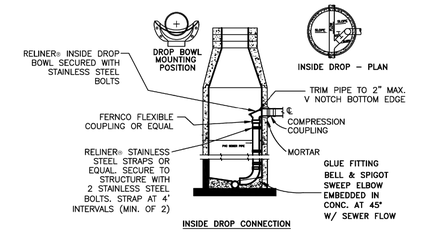

INSIDE DROP CONNECTION

NOTES:

1. ALL INSIDE DROP CONNECTIONS FOR SERVICES AND COLLECTOR SEWERS SHALL USE THE DROP BOWL AS PRODUCED BY:
   RELINER-DURAN, INC.
   53 MT. ARCHER RD.
   LYME, CT 06371
   (860)434-0277 FAX: (860)434-3195 OR EQUAL.
2. SECURE DROP PIPE TO MANHOLE WALL WITH RELINER-DURAN, INC STAINLESS STEEL ADJUSTABLE CLAMPING BRACKETS.

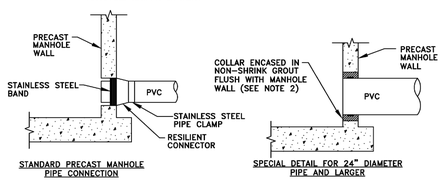

STANDARD PRECAST MANHOLE PIPE CONNECTION

SPECIAL DETAIL FOR 24" DIAMETER PIPE AND LARGER

NOTES:

1. DROP PIPE AND FITTINGS SHALL BE OF EQUAL SIZE AND MATERIAL AS THE INFLUENT SEWER.
2. THE CITY MAY APPROVE ALTERNATE WATERTIGHT CONNECTION DETAILS FOR CONNECTION OF 24" DIAMETER PIPES AND LARGER.
3. AN INSIDE DROP CONNECTION SHALL BE REQUIRED FOR ALL INFLUENT WHICH HAVE AN INVERT 24" OR MORE ABOVE THE OUTFLOW PIPE INVERT.
4. CONCRETE TO BE MINIMUM OF 3000 PSI.

MANHOLE CONNECTION DETAILS

CITY OF APOPKA DESIGN ENGINEERING DIVISION	JANUARY 2014	FIG. 201

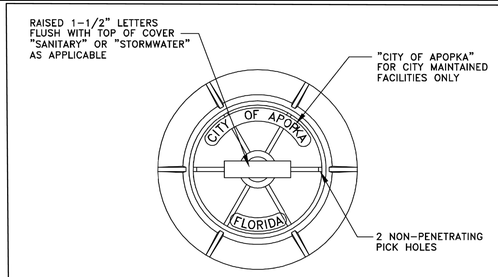

PLAN

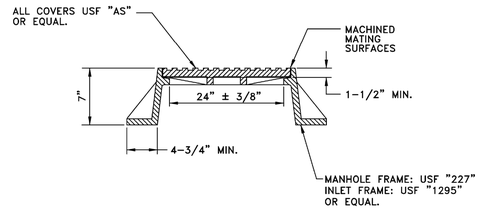

PROFILE

NOTES:

1. MANHOLE FRAME AND COVER ARE TO BE TRAFIC BEARING RATED H-20, CLASS 30 MEETING ASTM A 48.

STANDARD MANHOLE FRAME AND COVER

CITY OF APOPKA DESIGN ENGINEERING DIVISION	JANUARY 2014	FIG. 202

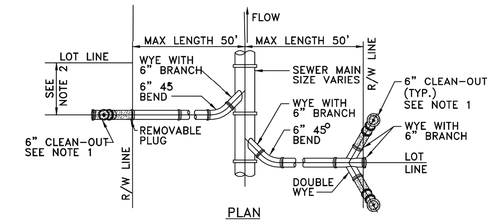

PLAN

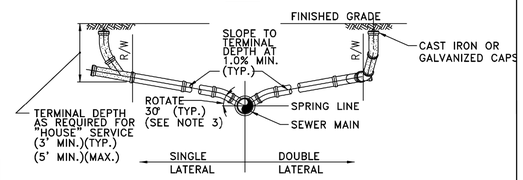

PROFILE

NOTES:

1. CLEAN-OUT (SHOWN SHADED) SHALL BE INSTALLED BY THE BUILDER IN ACCORDANCE WITH STANDARD PLUMBING CODE.
2. LOCATE SINGLE LATERAL AS CLOSE TO LOT LINE AS POSSIBLE.
3. INVERT OF SERVICE LATERAL SHALL NOT ENTER SEWER MAIN BELOW SPRING LINE.
4. RESIDENTIAL SERVICES SHALL BE 4 INCHES & NON-RESIDENTIAL SERVICES SHALL BE 6 INCHES IN DIAMETER AS A MINIMUM.
5. GALVANIZED, OR CAST IRON CLEAN-OUT CAP SHALL BE USED ON THE STUBOUT FOR EACH SERVICE.
6. LATERAL SHALL BE MARKED WITH AN "S" STAMPED OR CUT IN THE CURB.

SERVICE LATERAL DETAIL

CITY OF APOPKA DESIGN ENGINEERING DIVISION	JANUARY 2014	FIG. 204

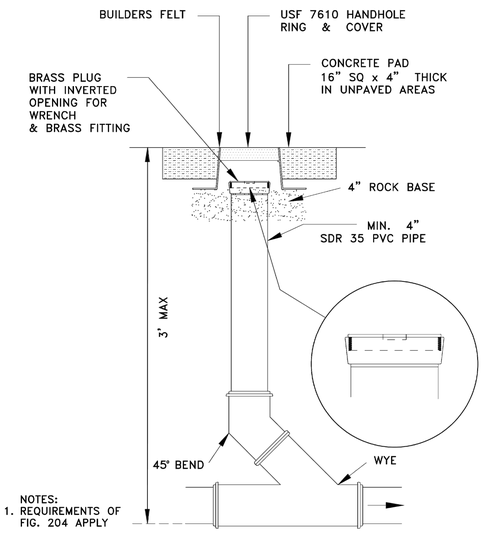

NOTES:
1. REQUIREMENTS OF FIG. 204 APPLY

SANITARY SEWER SERVICE TRAFFIC RATED CLEAN-OUT DETAIL

NTS

CITY OF APOPKA DESIGN ENGINEERING DIVISION	JANUARY 2014	FIG. 205

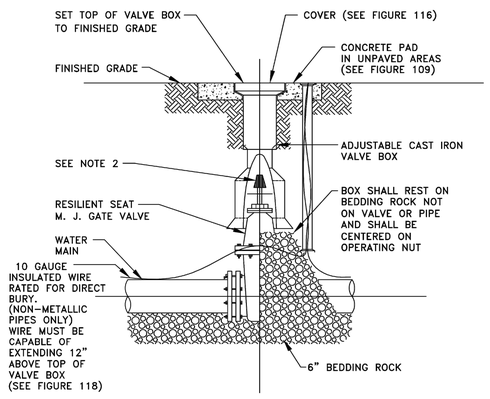

NOTES:

1. PVC EXTENSIONS MAY BE USED ON VALVE BOX INSTALLATION.
2. THE ACTUATING NUT FOR DEEPER VALVES SHALL BE EXTENDED TO WITHIN A 3 FEET BELOW FINISHED GRADE.

GATE VALVE AND BOX DETAIL

CITY OF APOPKA DESIGN ENGINEERING DIVISION	JANUARY 2014	FIG. 400

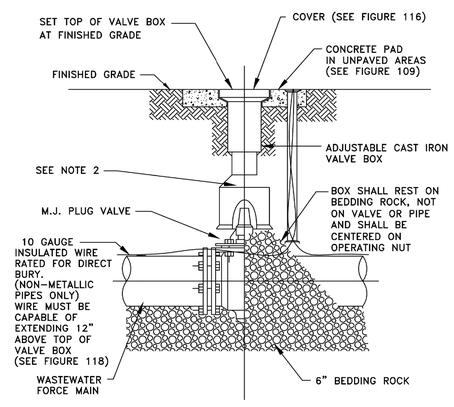

NOTES:

1. PVC EXTENSIONS MAY BE USED ON VALVE BOX INSTALLATION.
2. THE ACTUATING NUT FOR DEEPER VALVES SHALL BE EXTENDED TO WITHIN 3 FEET BELOW FINISHED GRADE.

PLUG VALVE AND BOX DETAIL

CITY OF APOPKA DESIGN ENGINEERING DIVISION	JANUARY 2014	FIG. 400 A

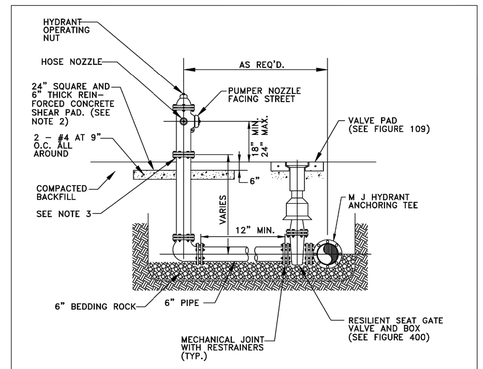

NOTES:

1. FIRE HYDRANT SHALL BE SUPPLIED WITHOUT A WEEP HOLE, OR WITH A PERMANENTLY PLUGGED WEEP HOLE.
2. THE SHEAR PAD SHALL BE RECESSED SIX (6) INCHES BELOW THE FINISHED GRADE AND THE RECESSED SECTION SODDED.
3. CLEARANCE BETWEEN BOTTOM OF BOLTS AND TOP OF SHEAR PAD SHALL BE A TWELVE (12) INCH MINIMUM.
4. FIRE HYDRANTS SHALL BE IDENTIFIED IN ACCORDANCE WITH THE CITY OF APOPKA CONSTRUCTION DESIGN STANDARDS MANUAL.

FIRE HYDRANT ASSEMBLY DETAIL

CITY OF APOPKA DESIGN ENGINEERING DIVISION	JANUARY 2014	FIG. 402

JOB #: 140138.20
PRJ. MGR.: JRC
DESIGNER: JRC
CHECKED: FWA

ENGINEER
JUSTIN R. CRUSENBERRY, P.E.
FL. LIC. #83288
DATE: Feb. 19, 2018

NO.	DATE	REVISIONS

PARCEL A
AVIAN POINTE
APOPKA, FLORIDA
FOR
APOPKA CLEAR LAKE INVESTMENTS, LLC

UTILITY DETAILS 3

NV5
201 S. BUMBY AVE.
ORLANDO, FL
(407) 896-3317
WWW.NV5.COM
CERTIFICATE OF AUTHORIZATION # 29085

SHEET
19

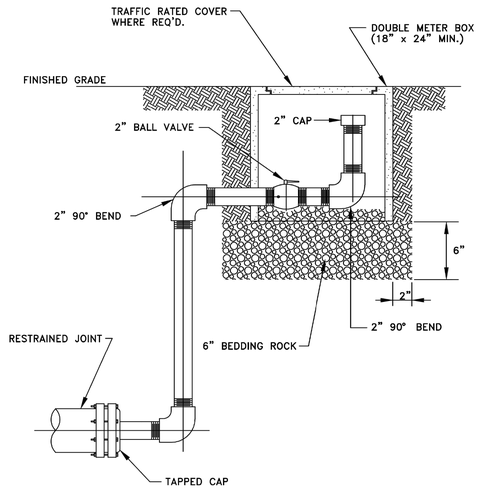

NOTES:

1. ALL 2 INCH PIPE AND FITTINGS SHALL BE SCHEDULE 40 GALVANIZED STEEL OR BRASS WITH THREADED (NPT) JOINTS. USE TEFLON TAPE ON JOINTS.
2. COLOR SHALL BE APPROPRIATE FOR USE.

BLOWOFF VALVE DETAIL

CITY OF APOPKA DESIGN ENGINEERING DIVISION	JANUARY 2014	FIG. 403

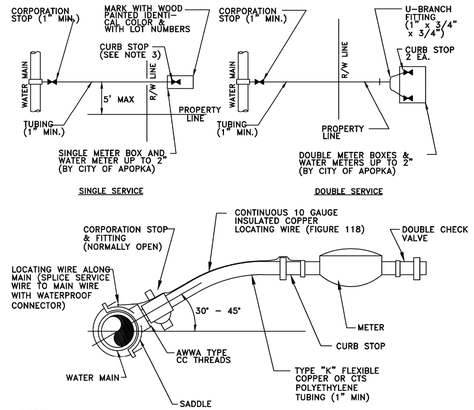

NOTES:

1. ALL FITTINGS SHALL BE BRASS WITH COMPRESSION/PACK JOINT TYPE CONNECTIONS.
2. NO SERVICE LINE SHALL TERMINATE UNDER A DRIVEWAY.
3. EACH SERVICE SHALL TERMINATE AT A CURB STOP(S) WHICH SHALL BE BURIED APPROXIMATELY 3" BELOW FINAL GRADE AND SHALL BE CLEARLY MARKED WITH A 2" x 2" x 18" STAKE WITH THE TOP PAINTED BLUE FOR POTABLE WATER AND PURPLE FOR RECLAIMED WATER, AND MARKED WITH THE NUMBER OF THE LOT(S) TO BE SERVED.
4. RECLAIMED WATER SERVICES SHALL USE PURPLE COLORED CTS POLYETHYLENE TUBING.
5. POTABLE WATER SERVICES SHALL USE BLUE COLORED CTS POLYETHYLENE TUBING.
6. ALL SERVICE UNDER EXISTING OR PROPOSED PAVEMENT SHALL BE INSTALLED IN A MINIMUM 2" PVC SLEEVE.

WATER SERVICE CONNECTION DETAIL

CITY OF APOPKA DESIGN ENGINEERING DIVISION	JANUARY 2014	FIG. 405

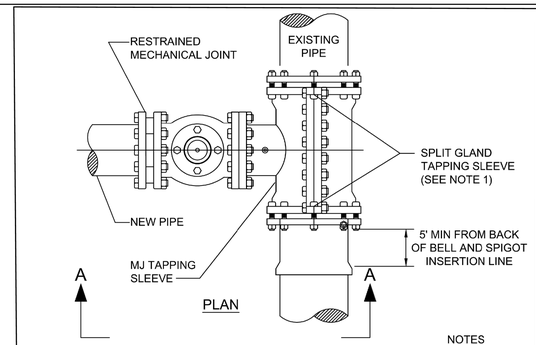

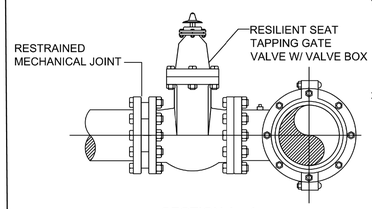

SECTION A - A

NOTES

1. SIZE ON SIZE WET TAPS WILL CALL FOR FULL ENCIRCLEMENT STAINLES STEEL MJ TAPPING SLEEVE; MUELLER H-304, OR EQUAL.
2. ALL NEWLY INSTALLED TAPPING SLEEVES & TAPPING VALVES SHALL E PNEUMATICALLY TESTED AT A TEST PRESSURE OF 150PSI FOR A PERIOD OF THIRTY MINUTES.

WATER AND RECLAIMED WATER MAINS WET TAP TIE-IN DETAIL

CITY OF APOPKA DESIGN ENGINEERING DIVISION	JANUARY 2014	FIG. 406

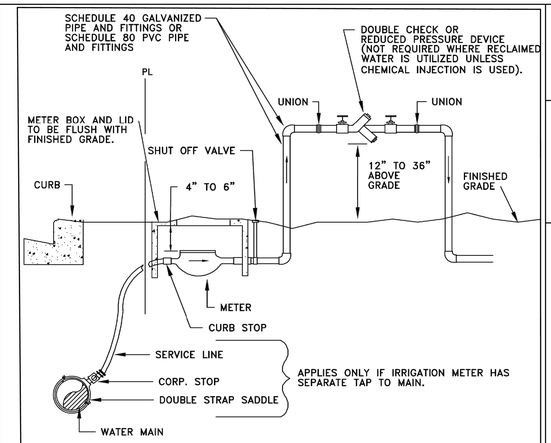

NOTES:

1. A POSITIVE DIELECTRIC CONNECTION SHALL BE MADE BETWEEN ALL GALVANIZED AND BRASS COMPONENTS.
2. METER SHALL BE INSTALLED JUST INSIDE THE ROW LINE OR PROPERTY LINE AND IN NO CASE SHALL IT BE INSTALLED IN THE SIDEWALK OR OTHER PAVED AREAS.
3. DOUBLE CHECK VALVES MAY BE USED AS LONG AS THEIR ARE NO CHEMICALS OR A WELL ON SITE.
4. A PVB DEVICE SHALL BE 12-INCHES MINIMUM ABOVE HIGHEST OUTLET OR SPRAYHEAD
5. ALL BACKFLOW PREVENTION DEVICES ARE TO BE AWWA APPROVED.

IRRIGATION METER AND DOUBLE CHECK VALVE OR REDUCED PRESSURE BACKFLOW PREVENTER

CITY OF APOPKA DESIGN ENGINEERING DIVISION	JANUARY 2014	FIG. 502

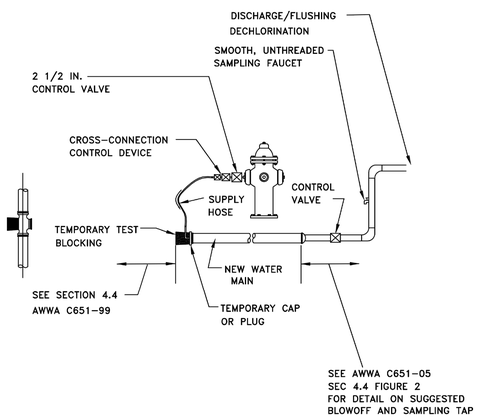

NOTE:

1. SEE FIGURE 504C FOR PROCEDURES.

TEMPORARY JUMPER CONNECTION FROM FIRE HYDRANT

CITY OF APOPKA DESIGN ENGINEERING DIVISION	JANUARY 2014	FIG. 504 B

TEMPORARY JUMPER CONNECTION NOTES:

1. A temporary jumper connection is required at all connections between existing active water mains and proposed new water main improvements.
2. Figures 504 A and 504 B to be used for filling any new water main of any size from existing active water mains and for flushing of new mains up to 8 inches in diameter (2.5 FPS minimum velocity) and for pulling bacteriological samples from any new water main of any size. The jumper connection shall be maintained until after filling, flushing testing and disinfection of the new main has been successfully completed and cleared for use from the Florida Department of Environmental Protection (FDEP) and other pertinent agencies have been received. The jumper connection shall also be used to maintain a minimum pressure of 20 psi in the new mains after disinfection and until the FDEP clearance letter is obtained. Thrust blocking and/or restraints shall be provided temporarily, as required. Pipe and fittings used for connecting the new pipe to the existing pipe shall be disinfected prior to installation in accordance with AWWA C651, 2005 edition. The tapping sleeve and the exterior of the main to be tapped shall be disinfected by spraying or swabbing per section II of AWWA C651-05.
3. Flushing of 10 inches in diameter and larger water mains may be done through the tie-in valve under very controlled conditions. The following procedures shall be followed:
   A. The tie-in valves shall be operated and pressure tested in the presence of the City engineer to verify water tightness prior to tie-in. Valves which are not water tight shall be replaced with a new valve installed immediately adjacent to the leaking valve.
   B. The temporary jumper connection shall be constructed as detailed. The jumper connection shall be used to fill the new water main and for providing water for bacteriological sampling of the new main as required by the FDEP permit.
   * Flushing shall not be attempted during peak demand hours of the existing water mains.
   * All downstream valves in the system must be open prior to opening the tie-in valve.
   * Provide for and monitor the pressure in the tie-in point. The pressure in the existing main must not drop below 35 psi.
   * The tie-in valve shall be opened a few turns only, ensuring a pressure drop across the valve is greater than 10 psi.
   C. The tie-in valve shall be locked closed by the City personel until flushing begins.
   D. The tie-in valve shall be opened only for flushing of the new main. The procedure shall be directed by the City and observed by the engineer.
   E. After flushing, the tie-in valve shall be closed and locked in the closed position by the City personel.
4. The contractor shall provide documentation demonstrating that the double check backflow prevention device has been tested and is in good working order at the time of installation.
5. Except as required to flush lines of greater than 8 inches in diameter, the tie-in valve shall remain closed and shall be locked in the closed position by the City. The tie-in valve shall remain locked closed until the new system has been cleared for use by FDEP and all other pertinent agencies.
6. Upon receipt of clearance for use from FDEP and all other pertinent agencies, the contractor shall remove the temporary jumper connection. The corporation stops are to be closed and plugged with 2 inch brass plugs.
7. All installation and maintenance of the temporary jumper connection and associated backflow prevention device, fittings, valve, etc. shall be the responsibility of the contractor.

PROCEDURES FOR TEMPORARY JUMPER CONNECTION

CITY OF APOPKA DESIGN ENGINEERING DIVISION	JANUARY 2014	FIG. 504 C

NOTE:

SUB-GRADE TO BE COMPACTED TO 95% MAX. DENSITY AS DETERMINED BY AASTHO T-180 CUT TO BE REPLACED WITH 8" LIME ROCK AND COMPACTED TO 98% MAX. DENSITY TO TOP OF EXISTING BASE. CUT AREA TO BE PLATED OR PROTECTED ON THE DAY OF POUR. EXISTING SURFACE TO BE SAW CUT TO AN AREA OF FIVE FEET (5') BEYOND BASE CUT.

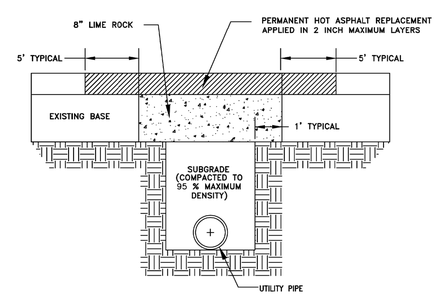

GENERAL NOTES:

1. BASE REPLACEMENT SHALL BE 8" LIME ROCK COMPACTED TO 98% MAX. DENSITY.
2. ASPHALTIC CONCRETE SURFACE MATERIAL SHALL BE REPLACED WITH THE SAME TYPE OF MATERIAL AT THE TIME OF REMOVAL.
3. MINIMUM ASPHALTIC CONCRETE SURFACE OVERLAY THICKNESS SHALL BE ONE (1) INCH.
4. ALL JOINT CUTS SHALL BE MECHANICALLY SAW CUT.

PAVEMENT RESTORATION:

1. LONGITUDINAL CUTS MAY REQUIRE OVERLAY/RESURFACING OF THE COMPLETE WIDTH OF THE TRAVELED WAY.
2. CUTS AT INTERSECTIONS OF STREETS GENERALLY MAY REQUIRE A COMPLETE OVERLAY/RESURFACING TO THE END OF ALL RETURN RADII. AND ALSO TO A POINT TEN FEET (10') BEYOND THE CUT WHICHEVER IS GREATER.
3. ACTUAL REQUIREMENTS WILL BE AS STATED ON THE APPROVED PERMIT.

LIME ROCK

HOT PATCH

OPEN-CUT CROSS SECTION DETAIL

CITY OF APOPKA DESIGN ENGINEERING DIVISION	JANUARY 2015	FIG. 702

JOB #: 140138.20
PRJ. MGR.: JRC
DESIGNER: JRC
CHECKED: FWA

ENGINEER
JUSTIN R. CROSSON, P.E.
FL. LIC. #83268

DATE: Feb. 19, 2018

NO.	DATE	REVISIONS

PARCEL A
AVIAN POINTE
APOPKA, FLORIDA
FOR
APOPKA CLEAR LAKE INVESTMENTS, LLC

UTILITY DETAILS 4

NV5
201 S. BUMBY AVE.
ORLANDO, FL
(407) 896-3317
WWW.NV5.COM
CERTIFICATE OF AUTHORIZATION # 29005

SHEET
20

NOTE:
USE SECTION 104 FROM THE JANUARY 2019 FDOT STANDARD SPECIFICATIONS FOR ALL PREVENTION, CONTROL, AND ABATEMENT OF EROSION AND WATER POLLUTION.

LEGEND

SEDIMENT BARRIER

INLET PROTECTION

TEMPORARY CONSTRUCTION DRIVEWAY

S 89° 41' 22" E

N 89° 41' 22" W

N 0° 18' 38" E

S 0° 18' 38" W

POT STA. 307+87.54

PT STA. 35+07.36

0 10 50
Feet

JOB #: 140138.20

PRJ. MGR: JRC

DESIGNER: JRC

CHECKED: FWA

ENGINEER
JUSTIN R. CUMMINGS, P.E.
FL. LIC. #83288

DATE: Feb. 19, 2018

NO.	DATE	REVISIONS

PARCEL A
AVIAN POINTE
APOPKA, FLORIDA

FOR
APOPKA CLEAR LAKE INVESTMENTS, LLC

SEDIMENT & EROSION CONTROL PLAN

NV5
201 S. BUMBY AVE.
ORLANDO, FL
(407) 896-3317
WWW.NV5.COM
CERTIFICATE OF AUTHORIZATION # 29065

SHEET
21

NOTE:
USE SECTION 104 FROM THE JANUARY 2019 FDOT STANDARD SPECIFICATIONS FOR ALL PREVENTION, CONTROL, AND ABATEMENT OF EROSION AND WATER POLLUTION.

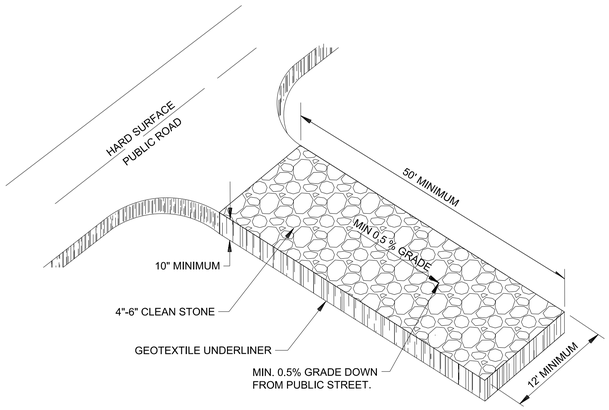

CONSTRUCTION ENTRANCE

NOT TO SCALE

PLACE TWO OR MORE SETS OF SAND BAGS IN A MANNER THAT RESULTS IN MAXIMUM SUPPORT. THE FLOW LINE BAG MUST BE LOWER THAN THE TOP OF CURB.

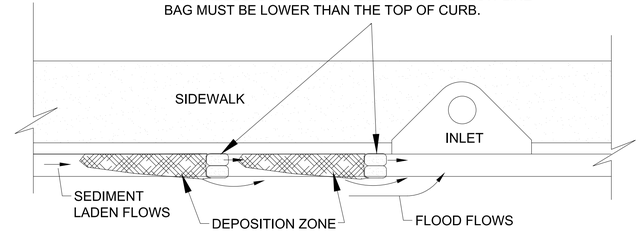

NOTE: FILL SAND BAGS ABOUT $\frac{2}{3}$ FULL BEFORE PLACING IN THE GUTTER.

STREET GRADE %	SPACING (FT)
0.5	100
1.0	50
2.0	25
3.0	16
4.0	13
5.0	10

CURB & GUTTER SEDIMENT CONTAINMENT SYSTEM

NOT TO SCALE

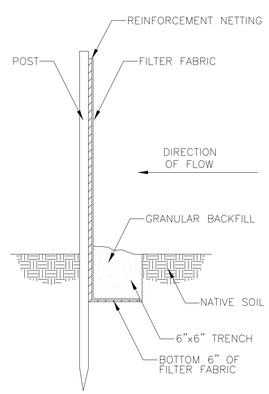

SILT BARRIER DETAIL

NOT TO SCALE

SPECIFIER CHART

MODEL NO.	CATCH BASIN ID Inside Dimension (inch x inch)	CURB DAM OPTION (YES / NO)
FG-TB24	24 x 24	NO
FG-TB24D	24 x 24	YES
FG-TB2436	24 x 36	NO
FG-TB2436D	24 x 36	YES
FG-TB36	36 x 36	NO
FG-TB36D	36 x 36	YES

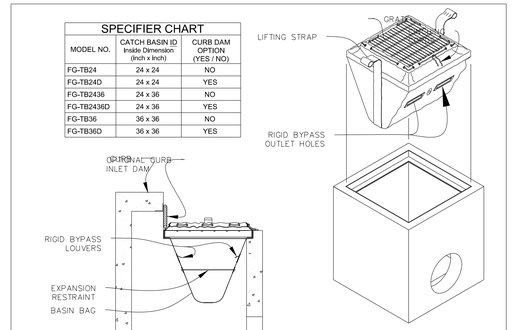

SECTION VIEW
-INSTALLED-
WITH OPTIONAL CURB INLET DAM

NOTES:
1. FloGard T-Bag is manufactured from woven monofilament polypropylene fabric. Other materials available upon request.
2. May be ordered with Fossil Rock oil absorbent pouches installed.
3. Optional curb inlet dam available upon request.
4. Periodic maintenance is required. FloGard T-Bag should never be allowed to fill beyond the top of the bypass outlet louvers.
5. Appropriate lifting equipment should be used when performing periodic maintenance.

TITLE
FloGard® T-BAG™
TEMPORARY INLET PROTECTION DEVICE

KriStar Enterprises, Inc.
P.O. Box 6419, Santa Rosa, CA 95406
Ph: 800.579.8819, Fax: 707.524.8186, www.kristar.com

DRAWING NO.	REV	REV	DATE	SHEET
FG-TB-0001	N/R	0002	JPR 09/01/06	SHEET 1 OF 1

INLET SEDIMENT FILTER

NOT TO SCALE

JOB #: 140138.20
PRJ. MGR.: JRC
DESIGNER: JRC
CHECKED: FWA

ENGINEER
JUSTIN R. CUMMINGS, P.E.
FL. LIC. #83298
DATE: Feb. 19, 2018

NO.	DATE	REVISIONS

PARCEL A
AVIAN POINTE
APOPKA, FLORIDA
FOR
APOPKA CLEAR LAKE INVESTMENTS, LLC

SEDIMENT & EROSION CONTROL DETAILS

NV5
201 S. BUMBY AVE.
ORLANDO, FL
(407) 896-3317
WWW.NV5.COM
CERTIFICATE OF AUTHORIZATION # 29065

SHEET
22

THE FOLLOWING NARRATIVE OF THE STORMWATER POLLUTION PREVENTION PLAN CONTAINS REFERENCES TO THE STANDARD SPECIFICATIONS FOR ROAD AND BRIDGE CONSTRUCTION, THE DESIGN STANDARDS, AND OTHER SHEETS OF THESE CONSTRUCTION PLANS. THE FIRST SHEET OF THE CONSTRUCTION PLANS (CALLED THE COVER SHEET) CONTAINS AN INDEX TO THE OTHER SHEETS. THE COMPLETE STORMWATER POLLUTION PREVENTION PLAN INCLUDES SEVERAL ITEMS: THIS NARRATIVE DESCRIPTION, THE DOCUMENTS REFERENCED IN THIS NARRATIVE, THE CONTRACTORS APPROVED EROSION CONTROL PLAN REQUIRED BY SPECIFICATION SECTION 104, AND REPORTS OF INSPECTIONS MADE DURING CONSTRUCTION.

1.0 SITE DESCRIPTION:

1.A. NATURE OF CONSTRUCTION ACTIVITY:

THE PROJECTS INCLUDES THE ROADWAY CONSTRUCTION OF THE PROPOSED DRIVEWAY CONNECTION TO THE GRAND AVIAN PARKWAY; AND THE SITE GRADING, AND CONSTRUCTION FOR PARCEL A SUBDIVISION.

1.B. SEQUENCE OF MAJOR SOIL DISTURBING ACTIVITIES:

IN THE SEDIMENT AND EROSION CONTROL PLAN, THE CONTRACTOR SHALL PROVIDE A DETAILED SEQUENCE OF CONSTRUCTION FOR ALL CONSTRUCTION ACTIVITIES. THE CONTRACTOR SHALL FOLLOW THE SEQUENCE OF MAJOR ACTIVITIES DESCRIBED BELOW, UNLESS THE CONTRACTOR PROPOSES A DIFFERENT SEQUENCE THAT IS EQUAL OR BETTER AT CONTROLLING EROSION AND TRAPPING SEDIMENT AND IS APPROVED BY THE ENGINEER. FOR EACH CONSTRUCTION PHASE, INSTALL PERIMETER CONTROLS AFTER CLEARING AND GRUBBING NECESSARY FOR INSTALLATION OF CONTROLS BUT BEFORE BEGINNING OTHER WORK FOR THE CONSTRUCTION PHASE. REMOVE PERIMETER CONTROLS ONLY AFTER ALL UPSTREAM AREAS ARE STABILIZED.

1. CLEARING AND GRUBBING, EARTHWORK AND CONSTRUCTION OF STORM DRAIN PIPES IN THE UPSTREAM DIRECTION AND CONVEYANCE DITCHES.

2. EARTHWORK ASSOCIATED WITH THE CONSTRUCTION OF DRIVEWAY, CURB, SUBGRADE, BASE, PAVEMENT AND SIDEWALK.

3. ASSOCIATED PAVING, MILLING AND RESURFACING.

1.C. AREA ESTIMATES:
TOTAL SITE AREA: 8.39 AC
TOTAL AREA TO BE DISTURBED: 8.39 AC

1.E. RUNOFF DATA:
RUNOFF COEFFICIENTS:
BEFORE: 0.80
DURING: FROM 0.20 TO 0.80
AFTER: 0.75

1.E SITE MAP

THE CONSTRUCTION PLANS ARE BEING USED AS THE SITE MAPS. THE LOCATION OF THE REQUIRED INFORMATION IS DESCRIBED BELOW. THE SHEET NUMBERS FOR THE PLAN SHEETS REFERENCED ARE IDENTIFIED ON THE COVER SHEET OF THESE CONSTRUCTION PLANS.

* DRAINAGE PATTERNS: THE DRAINAGE FLOW DIRECTIONS ARE SHOWN ON THE GRADING PLAN.

* AREAS NOT TO BE DISTURBED: ESSENTIALLY THE WHOLE PROJECT AREA WITHIN THE CLEAR AND GRUB LIMITS, AND PROPOSED R/W LIMES WILL BE DISTURBED DURING CONSTRUCTION.

* LOCATIONS OF TEMPORARY CONTROLS: THESE ARE SHOWN ON THE SEDIMENT & EROSION CONTROL PLANS.

* LOCATION OF PERMANENT CONTROL: THE STORMWATER PONDS ARE THE PRIMARY PERMANENT STORMWATER MANAGEMENT CONTROL.

* AREAS TO BE STABILIZED: TEMPORARY STABILIZATION PRACTICES ARE SHOWN IN THE SAME LOCATION AS THE TEMPORARY CONTROLS MENTIONED ABOVE. PERMANENT STABILIZATION IS SHOWN ON THE TYPICAL SECTION SHEETS AND THE SITE PLAN.

* SURFACE WATERS: EXISTING WETLANDS

* DISCHARGE POINTS TO SURFACE WATERS: WET POND CONTROL STRUCTURE.

2.0 CONTROLS:

2.A. EROSION AND SEDIMENT CONTROLS:

IN THE SEDIMENT AND EROSION CONTROL PLAN, THE CONTRACTOR SHALL DESCRIBE THE PROPOSED STABILIZATION AND STRUCTURAL PRACTICES BASED ON THE THE DEMOLITION AND PLANS, AND THE ROADWAY IMPROVEMENTS SWPPP SHEETS. THE CONTRACTOR MAY MODIFY THE EROSION AND SEDIMENT CONTROL MEASURES SHOWN ON THE CONSTRUCTION PLANS, SUBJECT TO APPROVAL BY THE ENGINEER. AS WORK PROGRESSES,THE CONTRACTOR SHALL MODIFY THE PLAN TO ADAPT TO SEASONAL VARIATION,CHANGES IN CONSTRUCTION ACTIVITIES, AND THE NEED FOR BETTER PRACTICES.

2.A.1 STABILIZATION PRACTICES:
IN THE SECTION 104 EROSION CONTROL PLAN, THE CONTRACTOR SHALL DESCRIBE THE STABILIZATION PRACTICES PROPOSED TO CONTROL EROSION. THE CONTRACTOR SHALL INITIATE ALL STABILIZATION MEASURES ON DISTURBED AREAS AS SOON AS PRACTICAL IN PORTIONS OF THE SITE WHERE CONSTRUCTION ACTIVITIES HAVE TEMPORARILY OR PERMANENTLY CEASED, BUT IN NO CASE SHALL MORE THAN 7 DAYS PASS AFTER THE CONSTRUCTION ACTIVITY IN THE PORTION OF THE SITE HAS TEMPORARILY OR PERMANENTLY CEASED. THE STABILIZATION PRACTICES SHALL INCLUDE AT LEAST THE FOLLOWING.

TEMPORARY:

* TURF AND SOD IN ACCORDANCE WITH SPECIFICATION SECTION 104.

PERMANENT:

* ASPHALT OR CONCRETE SURFACE.

* SOD IN ACCORDANCE WITH SPECIFICATION SECTION 570.

2.A.2 STRUCTURAL PRACTICES:

IN THE SECTION 104 EROSION CONTROL PLAN, THE CONTRACTOR SHALL DESCRIBE THE PROPOSED STRUCTURAL PRACTICES TO CONTROL OR TRAP SEDIMENT AND OTHERWISE PREVENT THE DISCHARGE OF POLLUTANTS FROM EXPOSED AREAS OF THE SITE. SEDIMENT CONTROLS SHALL BE IN PLACE BEFORE DISTURBING SOIL UPSTREAM OF THE CONTROL. THE STRUCTURAL PRACTICES SHALL INCLUDE AT LEAST THE FOLLOWING:

TEMPORARY (IN ACCORDANCE WITH SPECIFICATION SECTION 104):

* SEDIMENT BARRIER.

* INLET PROTECTION.

PERMANENT:

* STORMWATER PONDS.

* SOD.

2.B. STORMWATER MANAGEMENT:

STORMWATER RUNOFF GENERATED BY THE PROJECT WILL BE COLLECTED AND CONVEYED TO THE PONDS VIA SWALES TO CULVERTS AND CROSS DRAINS UNTIL THE PROPOSED STORM SEWER SYSTEM IS CONSTRUCTED. THE PROPOSED RUNOFF WILL BE COLLECTED AND CONVEYED TO THE PONDS VIA PROPOSED STORM SEWER SYSTEM.

2.C. OTHER CONTROLS:

2.C.1 WASTE DISPOSAL:

IN THE SEDIMENT AND EROSION CONTROL PLAN, THE CONTRACTOR SHALL DESCRIBE THE PROPOSED METHODS TO PREVENT THE DISCHARGE OF SOLID MATERIALS, INCLUDING BUILDING MATERIALS, TO WATERS OF THE UNITED STATES. THE PROPOSED METHODS SHALL INCLUDE AT LEAST THE FOLLOWING, UNLESS OTHERWISE APPROVED BY THE ENGINEER:

* PROVIDING LITTER CONTROL AND COLLECTION WITHIN THE PROJECT DURING CONSTRUCTION ACTIVITIES

* DISPOSING OF ALL FERTILIZER OR OTHER CHEMICAL CONTAINERS ACCORDING TO EPA'S STANDARD PRACTICES AS DETAILED BY THE MANUFACTURER

* DISPOSING OF SOLID MATERIALS INCLUDING BUILDING AND CONSTRUCTION MATERIALS OFF THE PROJECT SITE BUT NOT IN SURFACE WATERS, OR WETLANDS

2.C.2 OFF-SITE VECHICLE TRACKING AND DUST CONTROL:

IN THE SEDIMENT AND EROSION CONTROL PLAN, THE CONTRACTOR SHALL DESCRIBE THE PROPOSED METHODS FOR MINIMIZING OFF-SITE VEHICLE TRACKING OF SEDIMENTS AND GENERATING DUST. THE PROPOSED METHODS SHALL INCLUDE ATLEAST THE FOLLOWING, UNLESS OTHERWISE APPROVED BY THE ENGINEER.

* COVERING LOADED HAUL TRUCKS WITH TARPAULINS.

* REMOVING EXCESS DIRT FROM ROAD DAILY.
* STABILIZING CONSTRUCTION ENTRANCES PER THE DEPARTMENT'S EROSION AND SEDIMENT CONTROL MANUAL.
* USING ROADWAY SWEEPERS DURING DUST GENERATING ACTIVITIES SUCH AS EXCAVATION AND MILLING OPERATIONS.

2.C.3 STATE AND LOCAL REGULATIONS FOR WASTE DISPOSAL, SANITARY SEWER, OR SEPTIC TANK REGULATIONS:

IN THE SECTION 104 EROSION CONTROL PLAN, THE CONTRACTOR SHALL DESCRIBE THE PROPOSED PROCEDURES TO COMPLY WITH APPLICABLE STATE AND LOCAL REGULATIONS FOR WASTE DISPOSAL, AND SANITARY SEWER OR SEPTIC SYSTEMS.

2.C.4 FERTILIZERS AND PESTICIDES:

IN THE SEDIMENT AND EROSION CONTROL PLAN, THE CONTRACTOR SHALL DESCRIBE THE PROCEDURES FOR APPLYING FERTILIZERS AND PESTICIDES. THE PROPOSED PROCEDURES SHALL COMPLY WITH APPLICABLE SUBSECTIONS OF SECTION 570 OF THE SPECIFICATIONS.

2.C.5 TOXIC SUBSTANCES:

IN THE SEDIMENT AND EROSION CONTROL PLAN, THE CONTRACTOR SHALL PROVIDE A LIST OF TOXIC SUBSTANCES THAT ARE LIKELY TO BE USED ON THE JOB AND ON, STORAGE, AND DISPOSAL OF THESE SUBSTANCES.

2.D APPROVED STATE AND LOCAL PLANS AND PERMITS:

* FDEP RULE CHAPTER 62-25 F.A.C.

3.0 MAINTENANCE:

IN THE SEDIMENT AND EROSION CONTROL PLAN, THE CONTRACTOR SHALL PROVIDE A PLAN FOR MAINTAINING ALL EROSION AND SEDIMENT CONTROLS THROUGHOUT CONSTRUCTION. THE MAINTENANCE PLAN SHALL AT A MINIMUM, COMPLY WITH THE FOLLOWING:

* SILT FENCE: MAINTAIN PER SECTION 104. THE CONTRACTOR SHOULD ANTICIPATE REPLACING SILT FENCE ON 12 MONTH INTERVALS.

* SEDIMENT BARRIERS: REMOVE SEDIMENT AS PER MANUFACTURERS RECOMMENDATIONS OR WHEN WATER PONDS IN UNACCEPTABLE AMOUNTS OR AREAS.

* INLET PROTECTION: MAINTAIN PER SECTION 104.

* THE PONDS ARE TEMPORARY SEDIMENT BASINS UNTIL THE AREAS THAT DRAIN TO THEM ARE STABILIZED. SO UNTIL THEN, REMOVE SEDIMENT FROM THE POND WHEN IT BECOMES 1.5' DEEP AT ANY POINT.

4.0 INSPECTIONS:

QUALIFIED PERSONNEL SHALL INSPECT THE FOLLOWING ITEMS AT LEAST ONCE EVERY SEVEN CALENDER DAYS AND WITHIN 24 HOURS OF THE END OF A STORM THAT IS 0.50 INCHES OR GREATER. TO COMPLY, THE CONTRACTOR SHALL INSTALL AND MAINTAIN RAIN GAUGES AND RECORD THE DAILY RAINFALL. WHERE SITES HAVE BEEN PERMANENTLY STABILIZED, INSPECTIONS SHALL BE CONDUCTED AT LEAST ONCE EVERY MONTH. THE CONTRACTOR SHALL ALSO INSPECT THAT CONTROLS INSTALLED IN THE FIELD AGREE WITH THAT LATEST STORMWATER POLLUTION PREVENTION PLAN.

* POINTS OF DISCHARGE TO WATERS OF THE UNITED STATES.

* POINTS OF DISCHARGE TO MUNICIPAL SEPARATE STORM DRAIN SYSTEMS.

* DISTURBED AREAS OF THE SITE THAT HAVE NOT BEEN FINALLY STABILIZED.

* AREAS USED FOR STORAGE OF MATERIALS THAT ARE EXPOSED TO PRECIPITATION.

* STRUCTURAL CONTROLS.

* LOCATIONS WHERE VEHICLES ENTER OR EXIT THE SITE.

THE CONTRACTOR SHALL INITIATE REPAIRS IMMEDIATELY AFTER INSPECTIONS THAT INDICATE ITEMS ARE NOT IN GOOD WORKING ORDER.

IF INSPECTIONS INDICATE THAT THE INSTALLED STABILIZATION AND STRUCTURAL PRACTICES ARE NOT SUFFICIENT TO MINIMIZE EROSION, RETAIN SEDIMENT, AND PREVENT DISCHARGING POLLUTANTS, THE CONTRACTOR SHALL PROVIDE ADDITIONAL MEASURES, AS APPROVED BY THE ENGINEER.

5.0 NON-STORMWATER DISCHARGES:

THE CONTRACTOR SHALL IDENTIFY ALL ANTICIPATED NON-STORMWATER DISCHARGES (EXCEPT FLOWS FROM FIRE FIGHTING ACTIVITIES). THE CONTRACTOR SHALL DESCRIBE THE PROPOSED MEASURES TO PREVENT POLLUTION OF THESE NON-STORMWATER DISCHARGES. IF THE CONTRACTOR ENCOUNTERS CONTAMINATED SOIL OR GROUNDWATER, CONTACT THE FDOT DISTRICT 5 HAZARDOUS MATERIAL COORDINATOR AT (386) 943-5000.

PLEASE BE AWARE THAT ANY DEWATERING ACTIVITIES WILL REQUIRE THE GENERAL CONSTRUCTION DEWATERING PERMIT. IF DEWATERING OCCURS OR IS REQUIRED, THE CONTRACTOR SHALL OBTAIN THE FDEP GENERIC PERMIT FOR THE DISCHARGE OF PRODUCED GROUNDWATER FROM ANY SITE ACTIVITY (DOCUMENT NO. 62-621.300(2)) AND ADHERE TO NECESSARY PERMITTING REQUIREMENTS.

JOB #: 140138.20
PRJ. MGR.: JRC
DESIGNER: JRC
CHECKED: FWA

ENGINEER
JUSTIN C. RODRIGUEZ, P.E.
FL. LIC. #83288

DATE: Feb. 19, 2018

NO.	DATE	REVISIONS

PARCEL A
AT
AVIAN POINTE
APOPKA, FLORIDA
FOR
APOPKA CLEAR LAKE INVESTMENTS, LLC

STORMWATER POLLUTION PREVENTION PLAN

NV5
201 S. BUMBY AVE.
ORLANDO, FL
(407) 898-3317
WWW.NV5.COM
CERTIFICATE OF AUTHORIZATION # 29905

SHEET
23

MATCHLINE SEE L2.0

MATCHLINE SEE L2.0

AVIAN PARKWAY

AVIAN PARKWAY

SINGLE FAMILY RESIDENTIAL

SINGLE FAMILY RESIDENTIAL

EXISTING 6' MASONRY WALL

NOTE: STREET TREES AND IRRIGATION TO BE PROVIDED BY LOT OWNER

NOTE: COMMON AREA TREES AND IRRIGATION TO BE PROVIDED BY DEVELOPER

NOTE: STREET TREES AND IRRIGATION TO BE PROVIDED BY LOT OWNER

POND (BY OTHERS)

COMPENSATING STORAGE AREA (BY OTHERS)

WETLAND

LAKE

WETLAND

TREE SYMBOLS LEGEND

- LIVE OAK TREES @ 3-1/2" DBH
- CYPRESS TREES @ 2-1/2" DBH"
- STREET TREES +/- 30' SPACING BOSQUE ELM @ 2-1/2" DBH
- QUEEN PALM
- SYLVESTER DATE PALM
- TREE-FORM LIGUSTRUM
- SHRUBS AND GROUNDCOVER

SCALE: 1" = 30'

0 30 60

NORTH

J. SCOTT LIBERTY, LANDSCAPE ARCHITECT
FLORIDA REGISTRATION NO. LA00001476
5621 REVELWOOD LOOP, WINTER PARK, FL. 32792
PHONE: 407-719-2124 FAX: 407-671-6904

JOB #: 16058.20
PRJ. MGR: JRC
DESIGNER: JSL
CHECKED: JSL

LANDSCAPE ARCHITECT
J. SCOTT LIBERTY, RLA
FL LIC. #LA0001476

DATE: Feb. 15, 2019

NO.	DATE	REVISIONS

RECORD DRAWING

THIS RECORD DRAWING IS BASED ON THE RESULTS OF LIMITED FIELD OBSERVATIONS AND/OR INFORMATION PROVIDED TO, AND REVIEW OF, CONTRACTOR FURNISHED RECORED PLANS, AS-BUILTS AND OTHER DOCUMENTS PRIOR TO CONSTRUCTION, AND WITNESSED UTILITY TESTING OF DRAINAGE WATER AND SANITARY SEWER. NO WARRANTY OR GUARANTEE IS EXPRESSED OR IMPLIED. NO GUARANTEED, THE ENGINEER BELIEVES THIS RECORD DOCUMENT TO BE ACCURATE TO THE BEST OF HIS KNOWLEDGE.

ENGINEER:
FL LIC. #

THE LAKES
AT
AVIAN POINTE
APOPKA, FLORIDA
FOR
APOPKA CLEAR LAKE INVESTMENTS, LLC

LANDSCAPE PLAN

NVS
201 S. BUMBY AVE.
ORLANDO, FL
(407) 896-0317
WWW.NVS.COM
CERTIFICATE OF AUTHORIZATION # 29065

SHEET
L1.0

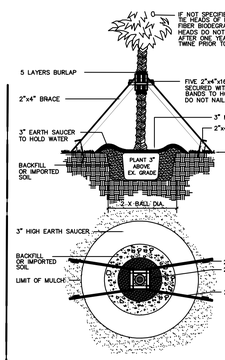

PALM PLANTING DETAIL

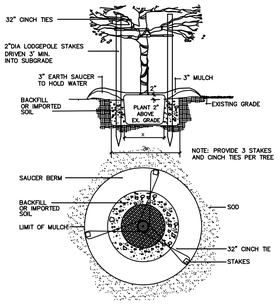

TREE PLANTING DETAIL

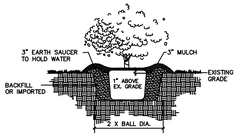

SHRUB AND GROUNDCOVER PLANTING DETAIL

PLANT NOTES

1). ALL LANDSCAPED AND SODDED AREAS DELINEATED ON THESE PLANS SHALL BE IRRIGATED BY AN AUTOMATIC SYSTEM. THE IRRIGATION SYSTEM SHALL PROVIDE 100% HEAD-TO-HEAD COVERAGE FOR ALL GREEN AREAS. RAIN SENSOR REQUIRED.

2). ALL LANDSCAPED BEDS SHALL BE TOP DRESSED WITH 3" OF DESIGNER BROWN MULCH.

3). ALL TREE SAUCERS SHALL BE TOP DRESSED WITH 3" OF DESIGNER BROWN MULCH.

4). IT IS THE RESPONSIBILITY OF THE LANDSCAPE CONTRACTOR TO BECOME FULLY FAMILIAR WITH ALL EXISTING CONDITIONS AND TO STUDY ALL SUBSURFACE UTILITY PLANS AND ARCHITECTURAL PLANS SO AS TO PREVENT DAMAGE DURING THE INSTALLATION OF THE LANDSCAPE MATERIAL.

5). STAKING OF TREES IS REQUIRED BY THE LANDSCAPE CONTRACTOR. IT IS THE RESPONSIBILITY OF THE LANDSCAPE CONTRACTOR TO MAINTAIN ALL TREES, PALMS AND SHRUBS IN AN UPRIGHT PLUM CONDITION.

6). THE LANDSCAPE CONTRACTOR SHALL BE RESPONSIBLE FOR ANY DAMAGE TO ARCHITECTURAL OR PAVED SURFACES.

7). ALL PLANT MATERIAL SHALL BE GRADED FLORIDA NO. 1 ACCORDING TO THE GRADES AND STANDARDS OF THE FLORIDA NURSERYMAN'S ASSOCIATION.

8). ALL TREE CALIPER DIMENSIONS SHALL BE MEASURED 54" ABOVE THE TOP OF THE ROOTBALL.

9). THE LANDSCAPE CONTRACTOR SHALL WARRANTY ALL SHRUBS FOR A PERIOD NO SHORTER THAN 90 DAYS FROM THE DATE OF THE " FINAL ACCEPTANCE" BY THE CLIENT AND LANDSCAPE ARCHITECT. ALL TREES SHALL CARRY A MINIMUM ONE YEAR WARRANTY. ALL WARRANTY RESTRICTIONS SHALL BE SPECIFICALLY DESCRIBED IN WRITING AND SHALL BE PART OF THE BIDDING DOCUMENTS PROVIDED TO THE CLIENT BY THE LANDSCAPE CONTRACTOR.

10). CONTRACTOR IS RESPONSIBLE FOR PLANT AND SOD QUANTITY TAKE-OFF. QUANTITIES PROVIDED FOR CONVENIENCE ONLY. PLAN QUANTITIES RULE OVER LIST QUANTITIES.

TREE REPLACEMENT DATA:

TOTAL SITE CLEARING AREA
= -------- S.F. (----- AC)

SPECIMEN TREE CHART (24" OR GREATER DBH)

		REMOVE		REMAIN	
TOTAL NO.	TOTAL CALIPER	NO.	CALIPER	NO.	CALIPER
--	-----"	--	-----"	--	--"

NON-SPECIMEN TREE CHART (6" TO 23" DBH)
(EXCLUDES EXOTIC TREE SPECIES)

		REMOVE		REMAIN	
TOTAL NO.	TOTAL CALIPER	NO.	CALIPER	NO.	CALIPER
---	-----"	---	-----"	--	---"

TOTAL TREE STOCK REQUIREMENT:

SPECIMEN TREE STOCK FORMULA CAP: ------- INCHES DBH
(AT 1" REPLACEMENT FOR 1" REMOVED)

NON-SPECIMEN TREE STOCK FORMULA CAP: ---- INCHES DBH
(AT 1" REPLACEMENT FOR 1" REMOVED)

TOTAL MAXIMUM TREE REPLACEMENT: ------- INCHES DBH
PROPOSED REPLACEMENT INCHES: ----- INCHES DBH
REPLACEMENT DEFICIT INCHES: ------- INCHES DBH

NOTE: TREE REPLACEMENT DEFICIT = ------- INCHES. OWNER HEREBY COMMITS TO PAYMENT INTO THE CITY'S TREE BANK FUND FOR AMOUNT TOTALING $ ------- @ $10.00 PER INCH DEFICIT.

NOTE: THE LIMITS OF TREE CLEARING SHALL INCLUDE ONLY THOSE AREAS REQUIRED TO CONSTRUCT THE PROPOSED VEHICLE STORAGE AREAS, PAVED AREAS, BUILDING, UTILITIES AND RETENTION POND AS SHOWN. ALL OTHER AREAS SHALL BE UNDISTURBED.

NOTE: TREE TRIMMING WORK SHALL REQUIRE REVIEW AND APPROVAL BY THE CITY THROUGH AN ARBOR PERMIT.

PLANT LIST

QTY	SYM	COMMON NAME (BOTANICAL NAME) SPECIFICATIONS
		TREES:
49	QV	LIVE OAK (QUERCUS VIRGINIANA) 65 GAL. MIN., 12' HT. MIN., 3.5" DBH MIN., 5' CT, UNCUT CENTRAL LEADER
8	LJ	TREE-FORM LIGUSTRUM (LIGUSTRUM JAPONICA) 65 GAL. MIN., 8' HT. MIN., 4' CT, MULTI-TTRUNK
12	PS	SYLVESTER PALM (PHOENIX SYLVESTRIS) B&B, 12' CT TO BOTTOM OF NUT, STRAIGHT TRUNK, FLORIDA FANCY
140	UP	BOSQUE ELM (ULMUS PARVIFOLIA 'EMER II') 65 GAL. MIN., 12' HT. MIN., 2.5" DBH MIN., 2' CT, FULL
44	SR	QUEEN PALM (SYAGRUS ROMANZOFFIANA) B&B, 14' MATCHED CLEAR TRUNK HT., FULL, STRAIGHT TRUNK
18	TD	SOUTHERN BALD CYPRESS (TAXODIUM DISTICHUM) 65 GAL. MIN., 12' HT. MIN., 2.5" DBH MIN., 2' CT, FULL
		BUFFER SHRUBS:
---	VO	SWEET VIBURNUM (VIBURNUM ODORATISSIMUM) 7 GAL. MIN., 24" HT. / 24" SPREAD MIN., 36" OC, FULL PLANT
		ORNAMENTAL SHRUBS AND GROUNDCOVERS:
---	RS	KNOCK-OUT ROSE STANDARD (ROSA RADTKO) 10 GAL. MIN., 5' HT. MIN., 3' SPREAD, STANDARD, 30" CT, FULL
---	RA	DWARF INDIAN HAWTHORN (RAPHIOLEPIS INDICA 'ALBA') 7 GAL. MIN., 24" HT. / 18" SPREAD MIN., 30" OC, FULL PLANT
---	LP	DWARF LORAPETALUM (LORAPETALUM CHINENSIS 'PURPLE PIXIE') 7 GAL. MIN., 12" HT. / 18" SPREAD MIN., 30" OC, FULL PLANT
---	DT	VARIEGATED FLAX LILY (DANIELLA TASMANICA 'VARIEGATA') 1 GAL., 12" HT. / SPR. MIN., 24" OC, FULL PLANT

GRASSES: (50% MAX. ST. AUGUSTINE USE IN GREEN AREA)
SOD: ST. AUGUSTINE (STENOTAPHRUM SECUNDATUM) SOLID SOD
SOD TO BE LAID WITH SOIL MAT FLUSH WITH TOP OF CURB AND PAVEMENT
BAHIA: ARGENTINE BAHIA (PASPALUM NOTATUM) SOLID SOD

CITY OF APOPKA LANDSCAPE ORDINANCE 2069 REQUIREMENTS

Landscaping and Irrigation shall comply with City of Apopka Ordinance 2069.

5' MINIMUM HORIZONTAL SEPARATION IS REQUIRED BETWEEN UNDERGROUND UTILITIES AND TREES.

115 TREES PROVIDED @ 1 TREE PER 8,000 SQUARE FEET OF SITE AREA: (21.2 AC) 922,427 SF/8,000 = 115 INTERIOR TREES

1050 LF 20' EAST BUFFER: 21,000 SF/1,000 = 21 X 3.5" = 73.5" DBH REQUIRED, 73.5" DBH PROVIDED BY 21-QV, 50' OC.

881 LF 20' NORTH BUFFER: 17,620 SF/1,000 = 18 X 3.5" = 63.0" DBH REQUIRED, 63.0" DBH PROVIDED BY 18-QV, 50' OC.
NORTH BUFFER LANDSCAPING: 4,405 SF (25% OF BUFFER) REQUIRED AND PROVIDED IN 5' WIDE PLANTING BED.

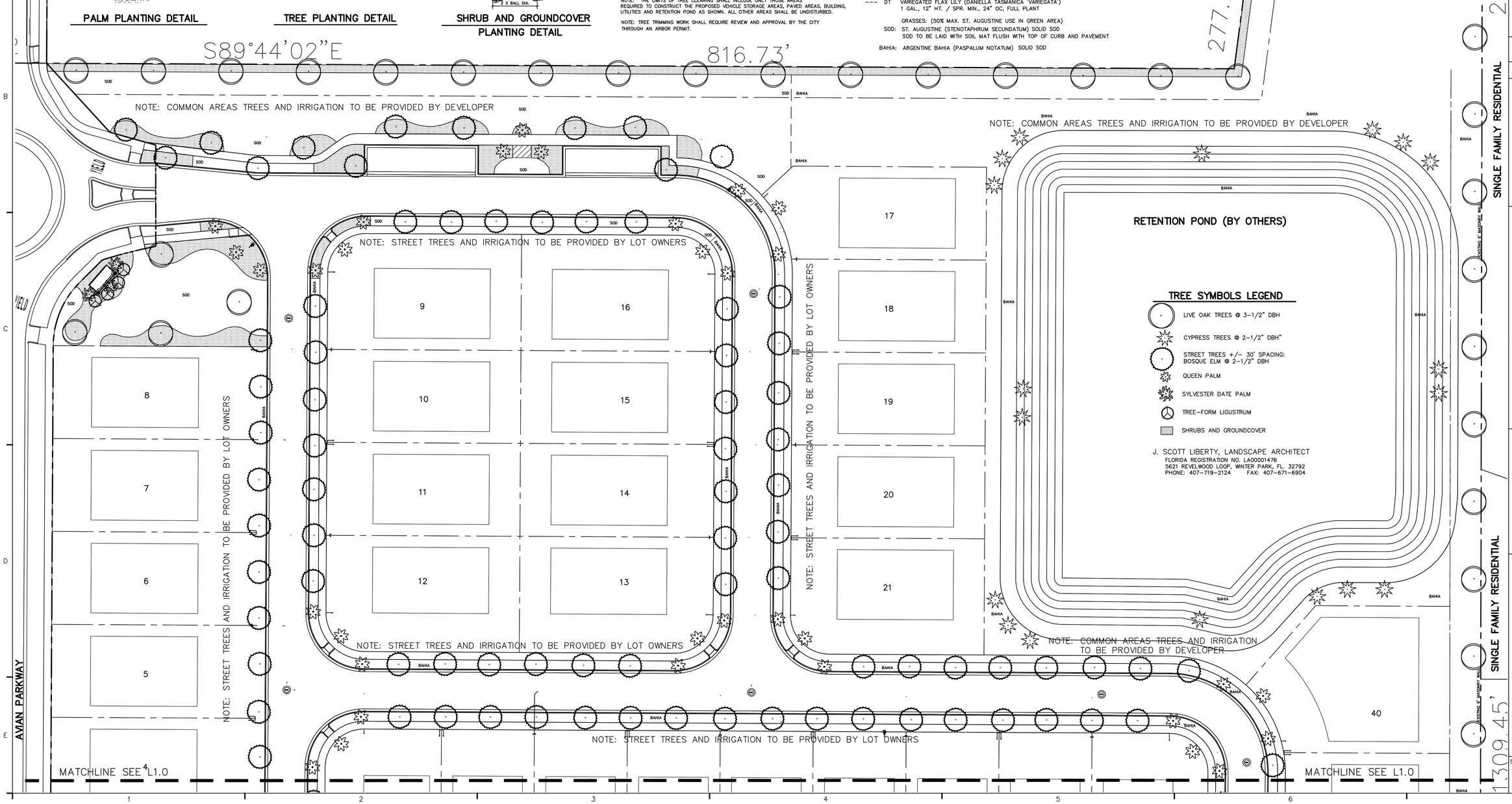

JOB #: 16068.20
PRJ. MGR: JRC
DESIGNER: JSL
CHECKED: JSL

LANDSCAPE ARCHITECT
J. SCOTT LIBERTY, RLA
FL LIC. #LA0001476

DATE: Feb. 18, 2019

NO.	DATE	REVISIONS

RECORD DRAWING

THIS RECORD DRAWING IS BASED ON THE RESULTS OF LIMITED FIELD OBSERVATIONS, INFORMATION PROVIDED TO THE ENGINEER, REVIEW OF CONTRACTOR FURNISHED RECORD PLANS, AND WITNESSED UTILITY TESTING OF DRAINAGE WATER AND SANITARY SEWER. THE ACCURACY OF UNDERGROUND UTILITIES IS NOT BE GUARANTEED. THE ENGINEER BELIEVES THIS RECORD DRAWING TO BE ACCURATE TO THE BEST OF HIS KNOWLEDGE.

ENGINEER:
FL LIC. #

THE LAKES AT AVIAN POINTE
APOPKA, FLORIDA
FOR
APOPKA CLEAR LAKE INVESTMENTS, LLC

LANDSCAPE PLAN

NVS
201 S. BUMBY AVE.
ORLANDO, FL
(407) 896-3317
WWW.NVS.COM
CERTIFICATE OF AUTHORIZATION # 29065

SHEET
L2.0

Prepared by and Return to:
Thomas R. Sullivan, Esq.
Gray Robinson, P.A.
301 East Pine Street, Suite 1400
Orlando, FL 32801

DOC# 20180564832
09/25/2018 11:58:16 AM Page 1 of 38
Rec Fee: $324.50
Deed Doc Tax: $0.00
DOR Admin Fee: $0.00
Intangible Tax: $0.00
Mortgage Stamp: $0.00
Phil Diamond, Comptroller
Orange County, FL
MB - Ret To: CITY OF APOPKA CITY CLERK

AMENDED AND RESTATED MASTER DEVELOPMENT AGREEMENT (AVIAN POINTE)

This Amended and Restated Master Development Agreement (the "Agreement") is made and entered into this 19th day of September, 2018 (the "Effective Date") by and between City of Apopka, a Florida municipal corporation, whose mailing is 120 East Main Street, Apopka, Florida 32703 (the "City"), and Apopka Clear Lake Investments, LLC, a Florida limited liability company, whose mailing address is 1810 West Kennedy Boulevard, Suite 232, Tampa, Florida 33606 ("Developer").

RECITALS

A. Developer is currently the owner and developer of that certain property located in the City of Apopka, Orange County, Florida legally described in Exhibit "A" attached hereto and made a part hereof (the "Property");

B. This Agreement hereby amends, restates and supersedes that certain Master Development Agreement recorded at Official Records Book 10971, Page 7017 of the Public Records of Orange County, Florida.

C. The Property is commonly known as Avian Pointe which is an approved Planned Unit Development, as may be amended from time to time (the "PUD"), consisting of single family, townhome, apartment, flex space and recreational uses (collectively, the "Project");

D. The City and the Developer are sometimes collectively referred to herein as the "Parties".

E. The Parties anticipate that the Project will be constructed in phases with two (2) phases for the townhome portion, two (2) phases for the apartment portion, one (1) single family home phase, one (1) phase for the flex space portion; and certain common areas, including but not limited to recreational areas, which shall also be constructed in phases all as more particularly described in Exhibit "B" attached hereto and made part hereof (the "Phasing Plan"); and

F. Developer will establish a Master Association to administer the maintenance of the common elements of the Project, including the recreational areas, in order to ensure the orderly development of the Project as a quality community.

G. Ensuring the ordered development of the Project serves the public purpose of providing the public with a high-quality development while minimizing adverse public impacts.

H. Developer has agreed to safeguard against certain adverse public impacts on the Property by securing performance bonds or other financial assurances for the construction of the common improvements within the Project, including the Community Park, Clubhouse Area and street network.

I. The City confirms that this Agreement is consistent with and an exercise of the City's powers under the Municipal Home Rule Powers Act; Article VII, Section 2(b) of the Constitution of the State of Florida; Chapter 166, Florida Statutes; all City Rules; other controlling law; and the City's police powers, and is a non-statutory development agreement which is not subject to or enacted pursuant to the provisions of Section 163.3220-163.3243, *Florida Statutes*.

NOW THEREFORE, for and in consideration of the mutual obligations contained herein and the sum of ten dollars ($10.00) and other good and valuable consideration the sufficiency of which is hereby conclusively acknowledged the parties agree as follows:

AGREEMENT

1. **Recitals.** The Recitals contained above are true and correct and are incorporated in this Agreement in full as if set forth herein verbatim.

2. **Project Phasing**. Developer may construct the Project in phases consistent with the Phasing Plan and the PUD Master Plan, but shall not be required to construct them in the sequence set forth on the Phasing Plan. Phasing must occur consistent with limitations and conditions set forth in the Transportation Improvements Development Agreement and Grant of Easement attached hereto as Exhibit "C" and made part hereof (the "Transportation Agreement"). Phase A of the Phasing Plan represents the single-family residential portion of the Project. Phase B-1 represents one townhome phase of the Project. Phase B-2 represents the apartment phases of the Project. Phase B-3 represents one townhome phase of the Project. Phase B-4 represents the recreational area phase of the Project, which may consistent of further sub-phases as set forth in this Agreement. Phase B-5 represents the flex space phase of the Project. Phase B-6 represents the open space phase for the flex space phase of the Project as well as the Spine Road (as defined in the Transportation Agreement).

3. **Master Association.** Prior to the issuance of the first building permit for the initial phase of the Project, Developer shall form the Avian Pointe Master Association (the "Master Association") through the creation of Articles of Incorporation, Bylaws and a Declaration of Covenants, Conditions and Restrictions (the "Governing Documents"). The Governing Documents shall be consistent with this Agreement and the Transportation Agreement and, to the extent of a conflict, this Agreement and the Transportation Agreement shall supersede the Governing Documents. The initial members of the Board of Directors for the Master Association

shall be Ken Stoltenberg and Franciscus ("Frank") Bombeeck with successors to be appointed based upon the ownership of the Property. As Developer sells portions of the Property to third parties, such third parties shall be added as members of the Master Association and the Board of Directors shall be updated to ultimately include a total of five (5) members representing the two (2) townhome phases, two (2) apartment phases and one (1) single family home phase. Each member shall agree on behalf of itself and their respective successors and assigns to comply with the PUD and other City approvals for the Project applicable to any portion of the Property owned by the particular party. The Governing Documents shall specify that an annual budget is established to adequately fund the maintenance of the park space and Internal Streets (as hereinafter defined). The Governing Documents shall also provide for the establishment of an Architectural Review Committee ("ARC"). Each individual phase of the Project shall be required to submit plans and specifications to the ARC before seeking approval of the same from the City. The City and the Developer agree that the Avian Pointe is intended to be a first-class residential community and the ARC shall establish review criteria consistent with such intent and similar communities within the Central Florida area. The Master Association shall be responsible for the maintenance of the landscaping, trees and grass within all medians and rights-of-way along the Spine Road for Segments A, B, and C, as described and further discussed in the Transportation Agreement. Maintenance shall include mowing grass and maintaining any vegetation or trees planted within the right-of-way or round-about.

4. **Temporary Density Limitation.** The Parties entered into the Transportation Agreement of even date herewith regarding, among other things, certain transportation improvements to be completed in connection with the Avian Pointe Project. The City and Developer further agree that notwithstanding the approval of the PUD, the density of the Property shall not exceed five (5) dwelling units per acre or 455 multi-family residential units (meaning single family, townhome and apartment units as used in this Agreement) until such time as the Spine Road (as defined in the Transportation Agreement) is connected to Peterson Road north of the Project.

5. **Internal Street Network**. With the exception of the Spine Road (as defined in the Transportation Agreement), all internal streets and on-street parking within the Project will be privately owned and maintained (the "Internal Streets"). The Governing Documents of the Master Association shall specify which Internal Streets are maintained by which phase of the Project in a manner that is consistent with the Road Delineation Plan attached hereto as Exhibit "D" and incorporated herein by this reference.

6. **Parking and On-Site Infrastructure**. Although the Project may be constructed in phases consistent with the Phasing Plan and this Agreement, each individual phase of the Project shall be required to provide sufficient on-site infrastructure to satisfy the applicable City Code requirements. Further, each individual phase shall be required to provide the number of parking spaces set forth within the PUD and Mixed Use Master Plan. All on street parking spaces with the exception of Parcel A shall be considered common areas and accessible to residents and guests of the entire Project.

7. **Shared Use Recreation Area**. The common Recreational Area Phase of the Project is depicted on the Phasing Plan as Phase B-4 (the "Shared Use Recreational Area"). The City and Developer agree that the Shared Use Recreational Area Phase will be developed by the Developer in one phase and must be completed before the residential building permit containing the 220th residential unit is issued for the Project or one year after a school opens on the Property, whichever occurs first. However, the City Administrator, at their discretion, may increase this number of units

by another 25 residential units upon the written request of the Developer. The Developer shall submit a Final Development Plan to the City for the Shared Use Recreational Area prior to the issuance of the 189th residential building permit for the Project. The Governing Documents of the Master Association shall require that the Master Association shall obtain and maintain ownership and control over Phase B-4 once built. The Recreational Area Phase shall be consistent with the amenities appearing on the Master Association Plan (PUD) for Phase B-4.

8. **Clubhouse Area**. The clubhouse and pool portion of Phase B-1 as depicted on the PUD (the "Clubhouse Area") shall include a minimum of 2,000 square feet of climate-controlled indoor space. The Clubhouse Area must be completed before the building permit containing the 125th residential unit is issued for Project Phases A, B-1 and B-3 combined. However, the City Administrator, at their discretion, may increase this number of units by another 25 residential units upon the written request of the Developer. A Final Development Plan for the Clubhouse Area must be submitted to the City prior to the issuance of the 75th building permit for Phases A, B-1 and B-3 combined. The Clubhouse Area shall be placed in a tract owned by the Master Association or Homeowners Association for Phases A, B-1 and B-3., and the tract shall be platted with the first residential plat for the Project.

9. **Apartments.** The apartment phases of the Project are characterized as luxury apartments and shall contain the following amenity features: (1) balcony/porch with each unit; (2) resort-style swimming pool; (3) dog park and (4) full washer and dryer within two and three-bedroom apartments and a full or stacked washer and dryer available in one-bedroom apartments. Additionally, at least two (2) of the other amenity features set forth on Exhibit "E" attached hereto and incorporated herein by this reference (the "Additional Luxury Apartment Amenity Features") shall be provided. No community laundry or coin laundry room is allowed.

10. **Flex Space Permitted Uses**. The following land uses are permissible uses within the Flex space area (Phase B-5):

a. Boutique Hotel. The Hotel shall not exceed 100 rooms and all rooms must have entry only through the interior of the hotel building. A restaurant is allowed at the hotel but must be interior to the hotel or connected by a covered walkway. Restaurant facilities must be managed or leased by the hotel owner. The boutique hotel shall demonstrate character and attributes common to the definition of such hotels and shall be furnished in a themed, stylish and/or aspirational manner.

b. School. A public or private school utilizing serving school age children from grades kindergarten (including pre-school) to 12th grade. Any middle school (7th, 8th, or 9th grades) or high school (9th, 10th, 11th, or 12th grades) is a permissible use within Phase B-5 may be required by the City to submit an updated traffic impact analysis. In the event that the Flex Space Phase is developed as a school use, the Master Association shall, upon the request of the school, enter into a shared use agreement with the owner of the school property to enable the school to utilize a portion of the Recreational Area Phase during normal school hours. Such use agreement shall set forth an obligation of the owner of the school property to participate in the maintenance costs of the Shared Recreational Area Phase (Parcel B-4) and Phase B-5 on a fair share basis to be agreed upon between the parties. The shared use agreement shall ensure the school has use of the Shared Recreation Area during school hours and during organized school activities. Additionally, upon request from the City or Orange County Public Schools, Developer or the Master Association shall dedicate a 15-foot-wide pedestrian easement to the City and Orange County Public Schools

extending from the Spine Road to Natural Bridge Court lying east of the Spine Road. Developer shall incur no costs of any kind in connection with such easement dedication, including without limitation, any construction costs for improvements made to the easement area.

c. Day care, adult or child.

d. Assisted Living Facility or Senior Housing.

e. Residential. The City and the Developer agree that in the event nonresidential development does not occur on the Flex Space area, Developer shall be permitted to convert the flex space to develop up to a maximum of sixty (60) townhome units on the Flex Space area to the extent and limited to a maximum residential density of ten (10) units per acres for the entire area of the Avian Pointe Master Plan assigned a Residential Medium Density Future Land Use Designation and subject to compliance with all school concurrency requirements and the City's Land Development Code. Conversion of the Flex Space area to residential townhomes shall not occur until after 650 residential units have been constructed within Avian Pointe or five (5) years from the completion of the Spine Road, whichever occurs first. Conversion may include residential apartments above first-floor professional or business office uses consistent with Section 9(f) below. Residential buildings within parcel B-5 nearest the Spine Road or the northern private road shall be have the front facade oriented to the street with the primary entrance connected to the street sidewalk and to the perimeter of the Parcel. Parking shall be behind residential buildings screen from S.R. 429 or the PUD roads. Residential buildings nearest the Spine Road shall be limited to two stories and a height of thirty-five (35) feet.

f. Vertical Mixed Use Buildings. Professional or business office on the first floor and apartments on the upper floors. A maximum of sixty (60) apartment units are allowed. A professional or business office unit shall not exceed 2,500 square feet.

G. Any residential development within the Flex Use Area must satisfy any applicable school concurrency requirements prior to submittal of a preliminary or final development plan.

11. **Development Design Review**. Prior to or commensurate with the submittal of the first Preliminary Development Plan for the Project, Developer shall submit a document for review by City staff demonstrating common design themes for utility and equipment located within common areas or private and public roadways, entrance features design, including but not limited to decorative street light poles, street name theme, and park benches\furniture. Entrance features and landscape plans for the round-about shall be also be submitted for review by City staff.

Any hedges placed along the Spine Road within Phases A and B-1 must be placed in a landscape easement belonging to the Master Association. The Master Association must maintain the hedges in perpetuity and shall not allow the hedges to exceed a height of four (4) feet. Each lot abutting the Spine Road and containing a hedge shall include a sidewalk connection through the hedge from the front door to the public sidewalk or multi-use trail within the Spine Road.

12. **Performance Bonding for Common Improvements**. Developer shall provide performance bonds or other financial assurances for the completion of the common improvements for the Project as follows:

a. Prior to the issuance of the first building permit for the construction of a residence on the Property, Developer or an agent of Developer shall post a performance bond or other financial assurance acceptable to the City in an amount equal to 110% of the estimated cost of construction of (1) the Shared Use Recreation Area facilities and (2) the Clubhouse Area in order to ensure completion of the Shared Use Recreation Area and Clubhouse Area as required by this Agreement.

b. Prior to the issuance of the first building permit for any specific Phase of the Project, Developer or an agent of Developer shall post a performance bond or other financial assurance acceptable to the City in an amount equal to 110% of the estimated cost of construction of the Internal Streets and Spine Road as described by this Agreement and the Transportation Agreement providing access within that specific Phase in order to ensure completion of said specific portion of the Internal Streets and Spine Road.

Nothing herein shall be construed as precluding Developer from satisfying multiple requirements established by this Section through a combined performance bond or other financial assurance acceptable to the City, so long as that combined instrument's total assurance is equal to 110% of the total estimated cost of construction of all common improvements contemplated by the combined instrument.

13. **Covenants Running with the Land/Assignment**. The terms, provisions, covenants, conditions and restrictions set forth in this Agreement and the rights, privileges and benefits and duties, obligations and burdens assigned, granted, imposed and created pursuant to this Agreement shall and are hereby declared to be covenants running with the title to the Property. This Agreement shall legally benefit and bind the Developer and its respective successors and assigns.

14. **Off-Site Real Estate Directory Signage**. As the Avian Pointe Project is currently located in an isolated area until developed, the Developer may locate one (1) temporary real estate directory sign on private property at the intersection of King Street and W. Orange Avenue and at the intersection of Lust Road and Binion Road on a temporary basis and subject to the approval of the property owner. If multiple homebuilders are present within Avian Pointe, they must share this same real estate directory sign. The temporary real estate sign must be removed within four (4) years from the issuance of the first residential certificate of occupancy or upon completion of the 700th unit, whichever occurs first. Developer must obtain any necessary sign permits from the City prior to the installation of the temporary real estate directory sign described herein.

15. **Legal Proceedings, Attorneys' Fees**. In the event that either of party shall institute litigation or other legal proceedings against the other to interpret or enforce any term, provision, warranty, covenant or condition set forth in this Agreement, the prevailing party in such litigation or other legal proceedings following all appeals therefrom, if any, shall be entitled to recover from the non-prevailing party in such litigation or other legal proceedings reasonable attorneys', paralegals', and experts' fees and expenses and court costs incidental thereto, including those incurred on any bankruptcy proceeding and/or appeal of a lower court decision.

16. **Notices.**

a. All notices provided for in this Agreement shall be in writing and delivered personally (including delivery by courier) or by registered or certified mail, return receipt requested, postage prepaid, or via facsimile to the parties, at the addresses and facsimile numbers set forth below, with a copy forwarded to their respective attorneys, at the addresses and facsimile numbers set forth below, or at such other addresses as the parties shall designate to each other in writing:

City:	Edward Bass, City Administrator 120 East Main Street Apopka, Florida 32703 Telephone: (407) 703-1712
With a copy to:	Cliff Shepard, Esq. Shepard, Smith, Kohlmyer & Hand, P.A. 2300 Maitland Center Parkway, Suite 100 Maitland, Florida 32751 Telephone: (407) 622-1772
Developer:	Apopka Clear Lake Investments, LLC Attention: Ken Stoltenberg and Frank Bombeeck 1810 West Kennedy Blvd Suite 232 Tampa, Florida 33606 Telephone (813) 321-1984
With a copy to:	Thomas R. Sullivan, Esq. GrayRobinson, P.A. 301 E. Pine Street, Suite 1400 Orlando, Florida 32801 Telephone (407) 244-5664

b. Any notice, request, demand, instruction or other communication to be given to either party hereunder, shall be in writing and shall be hand-delivered, sent by Federal Express or a comparable overnight mail or delivery service, mailed by U.S. registered or certified mail, return receipt requested, postage prepaid, or transmitted by facsimile or telecopier to the parties and their listed co-recipients, at their respective addresses and/or facsimile numbers set forth herein. Any notice delivered as aforesaid shall be deemed delivered immediately upon mailing, delivery to an appropriate carrier, or receipt or refusal of delivery of said notice, whichever is earliest. The inability to deliver because of change in address of which no notice is given shall be deemed to be a receipt of the notice, demand and request. The party claiming delivery of notice via telecopier or facsimile shall have the burden of proving notice was in fact sent, which burden can be carried without further evidence if confirmed by the transmitting telecopier or facsimile machine. Any communication sent by facsimile or telecopier shall promptly be followed by a copy delivered by one of the other approved methods. Receipt shall be deemed to have occurred if delivered to an authorized agent or any employee of the

addressee or of the addressee's company. A time period in which a response to any notice, demand or request must be given pursuant to the terms of the Agreement, shall commence to run from the date of receipt. Any party may change the address for receiving notices, request, demands, or other communication by not less than three (3) days prior notice in accordance with this Paragraph. Telephone numbers are provided for convenience only.

c. City and Developer may from time to time notify the other of changes regarding where and to whom notices should be sent by sending notification of such changes pursuant to this Paragraph.

17. **Miscellaneous Provisions.**

a. **Entire Agreement**. This Agreement constitutes the complete and entire understanding and agreement between City and Developer concerning or with respect to the topics addressed in this Agreement and supersede any and all prior or contemporaneous covenants, agreements, undertakings, statements, representations or warranties, whether written or oral, of any party hereto concerning or with respect thereto.

b. **Relationship of the Parties**. This Agreement does not evidence the creation of, nor shall it be construed as creating a partnership or joint venture between the City and Developer. Developer cannot create an obligation or responsibility on behalf of City or bind City in any manner. Each Party is acting for its own account, and it has made its own independent decisions to enter into this Agreement and as to whether the same is appropriate or proper for it based upon its own judgment and upon advice from such advisers as it has deemed necessary. Each Party acknowledges that none of the other Parties hereto is acting as a fiduciary for or as an adviser to it in respect of this Agreement or any responsibility or obligation contemplated herein.

c. **Agency**. Developer and City, and their agents, contractors and subcontractors, shall perform all activities described in this Agreement as independent entities and not as agents of one another.

d. **Sovereign Immunity**. Nothing contained in this Agreement shall be construed as a waiver of City's right to sovereign immunity for tort claims under and subject to § 768.28, *Florida Statutes*.

e. **Captions and Paragraph Headings**. Captions and paragraph headings contained in this Agreement are for convenience of reference only and are in no way intended, and shall in no way be deemed, to define, describe, extend or limit the scope, content or intent of this Agreement or of any particular term, provision or paragraph hereof.

f. **Modification, Amendment or Termination**. This Agreement may not be changed, modified, amended or terminated except as expressly set forth in a

separate writing signed by both of the parties to this Agreement or their respective successors in interest or title.

g. **Recording in Public Records.** Developer shall ensure that this Agreement and the Transportation Agreement are recorded among the public records of Orange County, Florida promptly after the execution of the Agreement and Transportation Agreement by all parties.

h. **Indemnification.** Developer hereby indemnifies and holds City and its elected and appointed officials, employees and agents harmless from and against any and all claims (at law or in equity), disputes, lawsuits, injuries, damages, attorneys' fees and all adverse matters in any way arising out of or relating to the risks assumed by Developer under this Agreement.

i. **Default.** Failure by a Party to perform any of its obligations hereunder shall constitute default hereunder, entitling the non-defaulting Party to terminate this Agreement or to pursue the remedies of specific performance, injunctive relief or damages as set forth in this Agreement. Prior to termination of this Agreement, the non-defaulting Party exercising such right shall first provide the defaulting Party with written notice specifying such default and the actions needed to cure same, in reasonable detail. Upon receipt of said notice, the defaulting Party shall be provided thirty (30) day opportunity within which to cure such default.

j. **Bankruptcy.** In the event (a) an order or decree is entered appointing a receiver for Developer or its assets or (b) a petition is filed by Developer for relief under federal bankruptcy laws or any other similar law or statute of the United States, which action is not dismissed, vacated or discharged within sixty (60) days after the filing thereof, then City shall have the right to terminate immediately this Agreement.

k. **No Liability or Monetary Remedy.** Notwithstanding anything herein to the contrary, Developer and City, on behalf of themselves, and their respective successors and assigns, hereby agree that neither Party shall be liable to the other for any direct, indirect, special, punitive or consequential damages, including but not limited to, damages based on loss of service, revenues, profits or business opportunities, and hereby waive any and all claims and causes of action for the recovery of such direct, indirect, special, punitive or consequential damages.

l. **Governing Law; Binding Effect.** This Agreement and the construction, interpretation and enforcement thereof shall be construed in accordance with and governed by the laws of the State of Florida and shall be binding upon, inure to the benefit of and be enforceable by the parties hereto and their respective successors in interest or title.

m. **Venue.** The location for settlement of any and all claims, controversies, or disputes, arising out of or relating to any part of this Agreement, or any breach hereof, shall be Orange County, Florida.

n. **Construction of Agreement**. The fact that any one of the parties to this Agreement shall have drafted or structured or shall be deemed to have drafted or structured this Agreement or any particular term or provision of this Agreement shall not be considered by any court or other tribunal in the construction or interpretation of this Agreement or any particular term or provision of this Agreement, either in favor or to the disadvantage of such party.

o. **Severability**. If any of the terms, provisions, covenants or conditions set forth in this Agreement or the application thereof to any particular circumstance shall be held by any Court having jurisdiction to be illegal, invalid or unenforceable under applicable law, the remainder of this Agreement shall not be affected thereby and each provision of this Agreement shall be valid and enforceable to the fullest extent otherwise permitted by law.

p. **Counterparts**. This Agreement may be executed in two or more counterparts, each of which shall be and be taken to be an original, and are collectively but one instrument.

q. **Time of the Essence**. Time, and timely performance, is of the essence of this Agreement and of the covenants and provisions hereunder. When a date upon which a specified event shall occur or be performed falls upon a weekend or legal holiday, the time allowed for the event or performance to occur shall be extended to 5:00 p.m. on the next succeeding business day. For purposes of this Agreement, a "business day" shall mean any weekday that the banks in the county in which the Property is located are open for business (thereby excluding Saturdays, Sundays and legal holidays).

r. **Statutory Development Agreement**. This Agreement is not a statutory development agreement pursuant to Chapter 163, Florida Statutes (Florida Local Government Development Agreement Act), and is being entered into by the City pursuant to the City's home rule authority.

[SIGNATURES APPEAR ON FOLLOWING PAGES]

Witnesses:

Karen Chancey
Printed Name: Karen Chancey

Don Scalf
Printed Name: Don Scalf

APOPKA CLEAR LAKE INVESTMENTS, LLC,
a Florida limited liability company

By: _____
Name: F. Bombeck
Title: Managing Member

STATE OF FLORIDA
COUNTY OF Hillsborough

The foregoing instrument was acknowledged before me this 19th day of September 2018, by Frank Bombeck, as Managing Member of Apopka Clear Lake Investments, LLC, a Florida limited liability company, who is known to me ✓ or who produced _____ as identification on behalf of the company.

Karen Chancey
Notary Public
State of Florida at Large

My Commission Expires: July 17, 2019

KAREN CHANCEY
MY COMMISSION # FF 211094
EXPIRES: July 17, 2019
Bonded Thru Notary Public Underwriters

[SIGNATURES CONTINUED ON FOLLOWING PAGE]

CITY OF APOPKA

By: Bryan Nelson
Mayor

ATTEST:

Linda Goff
_____, City Clerk

Approved as to Form:

_____, City Attorney

STATE OF FLORIDA
COUNTY OF ORANGE

The foregoing instrument was acknowledged before me this 19th day of September, 2018, by Bryan Nelson, who is known to me ✓ or produced ___ as identification as Mayor of the City of Apopka, Florida, a municipal corporation of the State of Florida, on behalf of the City of Apopka, Florida.

Susan M Bone
Notary Public
State of Florida at Large

My Commission Expires:

Susan M. Bone
NOTARY PUBLIC
STATE OF FLORIDA
Comm# GG182400
Expires 4/25/2022

Exhibit "A"

The Property

PARCEL I.D. NUMBERS: 07-21-28-0000-00-002, 07-21-28-0000-00-015; 07-21-28-0000-00-064

PARCEL A LEGAL DESCRIPTION: (PARCEL ID # 07-21-28-0000-00-015)
THE WEST 1/2 OF THE EAST 1/2 OF THE SOUTHEAST 1/4 OF THE NORTHWEST 1/4 OF SECTION 7, TOWNSHIP 21 SOUTH, RANGE 28 EAST; EAST 1/2 OF THE WEST 1/2 OF THE SOUTHEAST 1/4 OF THE NORTHWEST 1/4 OF SECTION 7, TOWNSHIP 21 SOUTH, RANGE 28 EAST; EAST 1/4 OF THE SOUTHEAST 1/4 OF THE NORTHWEST 1/4 OF SECTION 7, TOWNSHIP 21 SOUTH, RANGE 28 EAST, AND; BEGINNING AT THE SOUTHEAST CORNER OF THE NORTHEAST 1/4 OF THE NORTHWEST 1/4 OF SECTION 7, TOWNSHIP 21 SOUTH, RANGE 28 EAST, RUN THENCE WEST 160 FEET, THENCE NORTH 7° 18' EAST 277.24 FEET, THENCE EAST 124.78 FEET, THENCE SOUTH 275 FEET TO THE P.O.B., ALL IN ORANGE COUNTY, FLORIDA.

PARCEL B LEGAL DESCRIPTION: (PARCEL ID # 07-21-28-0000-00-002)
PARCEL 1:
COMMENCE AT THE NORTHWEST CORNER OF SECTION 7, TOWNSHIP 21 SOUTH, RANGE 28 EAST, ORANGE COUNTY, FLORIDA, THENCE RUN SOUTH 01 DEGREES 00 MINUTES 22 SECONDS WEST A DISTANCE OF 2632.98 FEET TO A FOUND 4X4 CONCRETE MONUMENT, SAID MONUMENT BEING THE POINT OF BEGINNING; THENCE RUN SOUTH 89 DEGREES 53 MINUTES 02 SECONDS EAST A DISTANCE OF 100 FEET; THENCE RUN NORTH 01 DEGREES 00 MINUTES 22 SECONDS WEST A DISTANCE OF 1316.28 FEET; THENCE RUN SOUTH 89 DEGREES 45 MINUTES 54 SECONDS EAST A DISTANCE OF 1551.76 FEET; THENCE RUN SOUTH 00 DEGREES 26 MINUTES 18 SECONDS WEST A DISTANCE OF 1312.93 FEET, THENCE RUN NORTH 89 DEGREES 53 MINUTES 02 SECONDS WEST A DISTANCE OF 332.97 FEET TO A FOUND AXLE AT THE NORTHWEST CORNER OF THE NORTHEAST 1/4 OF THE SOUTHWEST 1/4 OF SECTION 7, TOWNSHIP 21 SOUTH, RANGE 28 EAST; THENCE RUN SOUTH 00 DEGREES 09 MINUTES 28 SECONDS EAST A DISTANCE OF 1875.24 FEET; THENCE RUN NORTH 89 DEGREES 47 MINUTES 20 SECONDS WEST A DISTANCE OF 516.81 FEET TO A POINT OF CURVATURE OF A NON-TANGENT CURVE BEING CONCAVE SOUTHWESTERLY, HAVING A RADIUS OF 597.96 FEET, A CHORD BEARING OF NORTH 54 DEGREES 41 MINUTES 55 SECONDS WEST, A CENTRAL ANGLE OF 5 DEGREES 10 MINUTES 09 SECONDS, THENCE RUN ALONG ARE OF SAID CURVE A DISTANCE OF 53.95 FEET; THENCE RUN NORTH 57 DEGREES 14 MINUTES 32 SECONDS WEST A DISTANCE OF 501.39 FEET TO A POINT OF CURVATURE OF A CURVE CONCAVE NORTHEASTERLY, HAVING A RADIUS OF 547.96 FEET, A CHORD BEARING OF NORTH 39 DEGREES 16 MINUTES 28 SECONDS WEST, A CENTRAL ANGLE OF 35 DEGREES 56 MINUTES 07 SECONDS, THENCE RUN ALONG ARC OF SAID CURVE A DISTANCE OF 343.68 FEET; THENCE RUN NORTH 89 DEGREES 50 MINUTES 05 SECONDS WEST A DISTANCE OF 131.12 FEET; THENCE RUN NORTH 00 DEGREES 24 MINUTES 43 SECONDS WEST A DISTANCE OF 1311.51 FEET TO THE POINT OF BEGINNING.
AND:
PARCEL 2:
A TRACT OF LAND LYING IN SECTION 7, TOWNSHIP 21 SOUTH, RANGE 28 EAST, DESCRIBED AS FOLLOWS:
COMMENCE AT THE SOUTHWEST CORNER OF THE ABOVE-REFERENCED SECTION 7 FOR A POINT OF REFERENCE; THENCE RUN SOUTH 89°47'20" EAST, ALONG THE SOUTH LINE OF SAID SECTION, 1024.58 FEET TO A POINT OF BEGINNING; THENCE DEPARTING SAID SOUTH SECTION LINE, RUN NORTH 00°12'40" EAST, 274.53 FEET TO A POINT OF CURVATURE OF A CURVE CONCAVE SOUTHWESTERLY; THENCE RUN NORTHWESTERLY ALONG SAID CURVE, HAVING A

RADIUS OF 305.00 FEET, A CENTRAL ANGLE OF 30°33'31", AN ARC LENGTH OF 162.67 FEET, A CHORD LENGTH OF 160.75 FEET, AND A CHORD BEARING OF NORTH 15°04'06" WEST TO A POINT OF REVERSE CURVATURE OF A CURVE CONCAVE NORTHEASTERLY; THENCE RUN NORTHWESTERLY ALONG SAID CURVE, HAVING A RADIUS OF 245.00 FEET, A CENTRAL ANGLE OF 22°15'56", AN ARC LENGTH OF 95.21 FEET, A CHORD LENGTH OF 94.61 FEET, AND A CHORD BEARING OF NORTH 19°12'53" WEST TO A POINT OF REVERSE CURVATURE OF A CURVE CONCAVE SOUTHWESTERLY; THENCE RUN NORTHWESTERLY ALONG SAID CURVE, HAVING A RADIUS OF 305.00 FEET, A CENTRAL ANGLE OF 34°15'29", AN ARC LENGTH OF 182.36 FEET, A CHORD LENGTH OF 179.66 FEET AND A CHORD BEARING OF NORTH 25°12'40" WEST TO A POINT OF COMPOUND CURVATURE OF A CURVE CONCAVE SOUTHWESTERLY; THENCE RUN NORTHWESTERLY ALONG SAID CURVE, HAVING A RADIUS OF 597.96 FEET, A CENTRAL ANGLE OF 09°46'25", AN ARC LENGTH OF 102.00 FEET, A CHORD LENGTH OF 101.88 FEET, AND A CHORD BEARING OF NORTH 47°13'37" WEST; THENCE RUN SOUTH 89°47'20" EAST, NON-TANGENT TO SAID CURVE, 516.82 FEET TO THE EAST LINE OF THE SOUTHWEST 1/4 OF THE SOUTHWEST 1/4 OF SAID SECTION 7; THENCE RUN SOUTH 00°09'22" EAST, ALONG SAID EAST LINE, 750.02 FEET TO THE SOUTHEAST CORNER OF THE SOUTHWEST 1/4 OF THE SOUTHWEST 1/4 OF SAID SECTION 7; THENCE RUN NORTH 89°47'20" WEST, ALONG SAID SOUTH SECTION LINE, 295.64 FEET TO THE POINT OF BEGINNING.

LESS AND EXCEPT RIGHT OF WAY FOR LUST ROAD AS DESCRIBED IN RIGHT-OF-WAY AGREEMENT RECORDED IN O.R. BOOK 521, PAGE 280; AND RIGHT-OF-WAY AGREEMENT RECORDED IN O.R. BOOK 538, PAGE 604, AS RE-RECORDED IN O.R. BOOK 554, PAGE 510, PUBLIC RECORDS OF ORANGE COUNTY, FLORIDA.

ALSO LESS AND EXCEPT THOSE PORTIONS DESCRIBED IN STIPULATED ORDER OF TAKING RECORDED IN O.R. BOOK 10106, PAGE 2611, PUBLIC RECORDS OF ORANGE COUNTY, FLORIDA.

AND TOGETHER WITH:

A PARCEL OF LAND SITUATED IN SECTION 7, TOWNSHIP 21 SOUTH, RANGE 28 EAST, ORANGE COUNTY, FLORIDA, BEING MORE PARTICULARLY DESCRIBED AS FOLLOWS: COMMENCE AT THE SOUTHWEST CORNER OF SECTION 7, TOWNSHIP 21 SOUTH, RANGE 28 EAST, ORANGE COUNTY, FLORIDA; THENCE RUN NORTH 00°23'17" EAST, ALONG THE WEST LINE OF THE SOUTHWEST 1/4 OF SAID SECTION 7, FOR A DISTANCE OF 30.00 FEET TO A POINT ON THE NORTH RIGHT OF WAY LINE OF LUST ROAD, AS RECORDED IN DEED BOOK 521, PAGE 280 OF THE PUBLIC RECORDS OF ORANGE COUNTY, FLORIDA; THENCE DEPARTING SAID WEST LINE, RUN NORTH 89°39'36" EAST, ALONG THE SAID NORTH RIGHT OF WAY LINE, FOR A DISTANCE OF 1155.54 FEET TO A POINT ON THE EASTERLY LIMITED ACCESS RIGHT OF WAY LINE OF STATE ROAD 429 PER ORLANDO/ORANGE COUNTY EXPRESSWAY AUTHORITY RIGHT OF WAY MAP PROJECT NUMBER 429-201, SAID POINT LYING ON A CURVE, CONCAVE SOUTHWESTERLY, HAVING A RADIUS OF 8150.00 FEET, A CHORD BEARING OF NORTH 26°36'44" WEST AND A CHORD DISTANCE OF 720.85 FEET; THENCE DEPARTING SAID NORTH RIGHT OF WAY LINE, RUN NORTHWESTERLY ALONG THE ARC OF SAID CURVE, AND SAID LIMITED ACCESS RIGHT OF WAY LINE, THROUGH A CENTRAL ANGLE OF 05°04'10" FOR AN ARC DISTANCE OF 721.09 FEET TO A POINT OF TANGENCY; THENCE RUN NORTH 29°08'49" WEST, ALONG SAID LIMITED ACCESS RIGHT OF WAY LINE, FOR A DISTANCE OF 75.30 FEET TO THE POINT OF BEGINNING; THENCE CONTINUE NORTH 29°08'49" WEST, ALONG SAID LIMITED ACCESS RIGHT OF WAY LINE, FOR A DISTANCE OF 34.79 FEET TO A POINT ON A NON-TANGENT CURVE, CONCAVE SOUTHWESTERLY, HAVING A RADIUS OF 597.96 FEET, A CHORD BEARING OF SOUTH 52°05'17" EAST AND A CHORD DISTANCE OF 49.59 FEET; THENCE DEPARTING SAID LIMITED ACCESS RIGHT OF WAY LINE, RUN SOUTHEASTERLY ALONG THE ARC OF SAID CURVE THROUGH A CENTRAL ANGLE OF 04°45'11" FOR AN ARC DISTANCE OF 49.60 FEET TO A POINT; THENCE DEPARTING SAID CURVE, RUN NORTH 89°47'20" WEST FOR A DISTANCE OF 22.18 FEET TO THE POINT OF BEGINNING.

AND TOGETHER WITH:

A PARCEL OF LAND SITUATED IN SECTION 7, TOWNSHIP 21 SOUTH, RANGE 28 EAST, ORANGE COUNTY, FLORIDA, BEING MORE PARTICULARLY DESCRIBED AS FOLLOWS:

COMMENCE AT THE SOUTHWEST CORNER OF SECTION 7, TOWNSHIP 21 SOUTH, RANGE 28 EAST, ORANGE COUNTY, FLORIDA; THENCE RUN NORTH 00°23'17" EAST, ALONG THE WEST LINE

OF THE SOUTHWEST 1/4 OF SAID SECTION 7, FOR A DISTANCE OF 30.00 FEET TO A POINT ON THE NORTH RIGHT OF WAY LINE OF LUST ROAD, AS RECORDED IN DEED BOOK 521, PAGE 280 OF THE PUBLIC RECORDS OF ORANGE COUNTY, FLORIDA; THENCE DEPARTING SAID WEST LINE, RUN NORTH 89°39'36" EAST, ALONG THE SAID NORTH RIGHT OF WAY LINE, FOR A DISTANCE OF 1155.54 FEET TO A POINT ON THE EASTERLY LIMITED ACCESS RIGHT OF WAY LINE OF STATE ROAD 429 PER ORLANDO/ORANGE COUNTY EXPRESSWAY AUTHORITY RIGHT OF WAY MAP PROJECT NUMBER 429-201, SAID POINT LYING ON A CURVE, CONCAVE SOUTHWESTERLY, HAVING A RADIUS OF 8150.00 FEET, A CHORD BEARING OF NORTH 25°11'52" WEST AND A CHORD DISTANCE OF 318.73 FEET; THENCE DEPARTING SAID NORTH RIGHT OF WAY LINE, RUN NORTHWESTERLY ALONG THE ARC OF SAID CURVE, AND SAID LIMITED ACCESS RIGHT OF WAY LINE, THROUGH A CENTRAL ANGLE OF 02°14'27" FOR AN ARC DISTANCE OF 318.73 FEET TO THE POINT OF BEGINNING, SAID POINT BEING ON A CURVE, CONCAVE SOUTHWESTERLY, HAVING A RADIUS OF 8150.00 FEET, A CHORD BEARING OF NORTH 27°43'57" WEST AND A CHORD DISTANCE OF 402.39 FEET; THENCE CONTINUE ALONG THE ARC OF SAID CURVE, AND SAID LIMITED ACCESS RIGHT OF WAY LINE, THROUGH A CENTRAL ANGLE OF 02°49'42" FOR AN ARC DISTANCE OF 402.33 FEET TO A POINT OF TANGENCY; THENCE RUN NORTH 29°08'49" WEST, ALONG SAID LIMITED ACCESS RIGHT OF WAY LINE, FOR A DISTANCE OF 75.30 FEET; THENCE DEPARTING SAID LIMITED ACCESS RIGHT OF WAY LINE, RUN SOUTH 89°47'20" EAST FOR A DISTANCE OF 22.18 FEET TO THE POINT OF CURVATURE OF A CURVE, CONCAVE SOUTHWESTERLY HAVING A RADIUS OF 597.96 FEET, A CHORD BEARING OF SOUTH 45°41'26" EAST AND A CHORD DISTANCE OF 83.86 FEET; THENCE RUN SOUTHEASTERLY ALONG THE ARC OF SAID CURVE THROUGH A CENTRAL ANGLE OF 08°02'31" FOR AN ARC DISTANCE OF 83.93 FEET TO THE POINT OF COMPOUND CURVATURE OF A CURVE, CONCAVE SOUTHWESTERLY, HAVING A RADIUS OF 245.00 FEET, A CHORD BEARING OF SOUTH 24°32'26" EAST AND A CHORD DISTANCE OF 179.66 FEET; THENCE RUN SOUTHEASTERLY ALONG THE ARC OF SAID CURVE THROUGH A CENTRAL ANGLE OF 43°01'07" FOR AN ARC DISTANCE OF 183.95 FEET TO THE POINT OF REVERSE CURVATURE OF A CURVE, CONCAVE NORTHEASTERLY, HAVING A RADIUS OF 245.00 FEET, A CHORD BEARING OF SOUTH 18°32'40" EAST AND A CHORD DISTANCE OF 94.61 FEET; THENCE RUN SOUTHEASTERLY ALONG THE ARC OF SAID CURVE THROUGH A CENTRAL ANGLE OF 22°15'55" FOR AN ARC DISTANCE OF 95.21 FEET TO THE POINT OF REVERSE CURVATURE OF A CURVE, CONCAVE SOUTHWESTERLY, HAVING A RADIUS OF 305.00 FEET, A CHORD BEARING OF SOUTH 18°34'31" EAST AND A CHORD DISTANCE OF 116.11 FEET; THENCE RUN SOUTHEASTERLY ALONG THE ARC OF SAID CURVE THROUGH A CENTRAL ANGLE OF 21°56'42" FOR AN ARC DISTANCE OF 116.82 FEET TO THE POINT OF BEGINNING

PARCEL NORTH LEGAL DESCRIPTION: (PARCEL ID # 07-21-28-0000-00-064)

THE WEST 50.00 FEET OF THE EAST 1/2 OF THE WEST 1/2 OF THE NORTHEAST 1/4 OF THE NORTHWEST 1/4 OF SECTION 7, TOWNSHIP 21 SOUTH, RANGE 28 EAST, ORANGE COUNTY, FLORIDA, LESS THE NORTH 30.00 FEET FOR RIGHT OF WAY.

Exhibit "B"
Phasing Plan

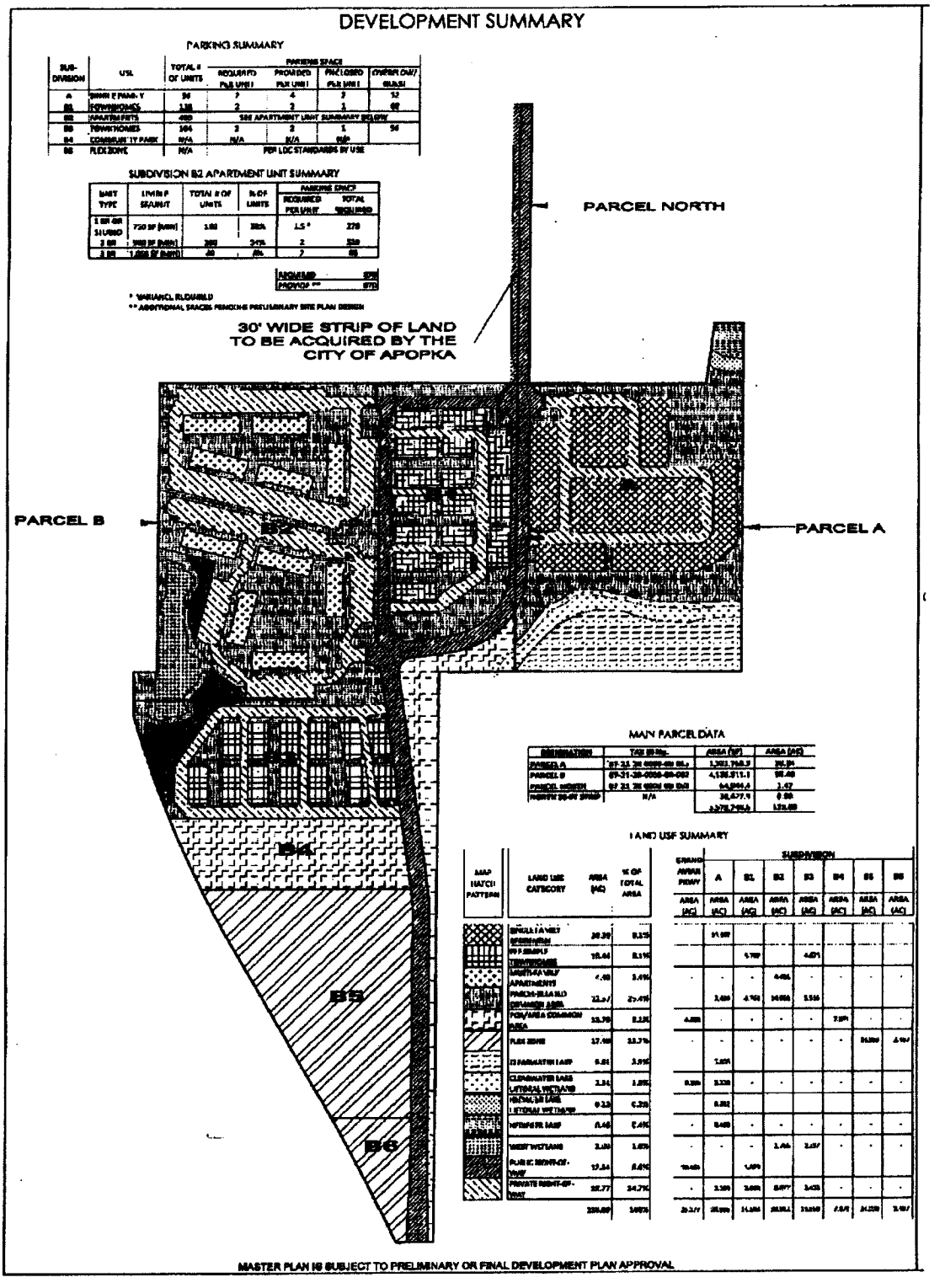

Exhibit "C"
Transportation Improvements Development Agreement and Grant of Easement

Prepared by and Return to:
Thomas R. Sullivan, Esq.
Gray Robinson, P.A.
301 East Pine Street, Suite 1400
Orlando, FL 32801

AMENDED AND RESTATED TRANSPORTATION IMPROVEMENTS DEVELOPMENT AGREEMENT AND GRANT OF EASEMENT

THIS **AMENDED AND RESTATED TRANSPORTATION IMPROVEMENTS DEVELOPMENT AGREEMENT AND GRANT OF EASEMENT** (the "Agreement") is made and entered into as of the 10th day of September 2018, by and between **CITY OF APOPKA**, a Florida municipal corporation, whose mailing address is 120 East Main Street, Apopka, Florida 32703 (hereinafter referred to as "**City**"), and **APOPKA CLEAR LAKE INVESTMENTS, LLC**, a Florida limited liability company, whose mailing address is 1810 West Kennedy Blvd, Suite 232, Tampa, Florida 33606 (hereinafter referred to as "**Developer**").

RECITALS

1. Developer is the of owner certain real property bearing Orange County Tax Parcel Identification Numbers 07-21-28-0000-00-002, 07-21-28-0000-00-015 and 07-21-28-0000-00-064 located in the City of Apopka, Orange County, Florida (collectively, the "**Property**").

2. Developer is processing certain land use and zoning approvals with the City, including a Planned Unit Development zoning approval (the "**PUD**"), with respect to the Property.

3. This Agreement hereby amends, restates and supersedes that that certain Master Development Agreement recorded at Official Records Book 10971, Page 7017 of the Public Records of Orange County, Florida.

4. The Property is approximately 125.62 total acres in size and is generally depicted and described on **Exhibit A** attached hereto and incorporated herein by this reference.

5. Developer is planning to construct a multi-phase residential community featuring single family, townhomes, luxury apartments and flex space on the Property (the "**Avian Pointe Project**").

6. The City envisions the development of other properties in the immediate vicinity of the Property.

7. The City has determined that the construction of a two-lane public road with related improvements (the "**Spine Road**") generally through the Property as more particularly described herein (collectively, the "**Transportation Improvements**") are required in order to achieve the appropriate traffic circulation to and from the Avian Pointe Project as well as other projects in the immediate area.

8. Developer agrees to undertake the Transportation Improvements as set forth in this Agreement.

9. To the extent that the City requests that Developer undertake the oversizing of any sewer force main, water main or reclaimed water main in connection with the Avian Pointe Project, City and Developer shall enter a separate agreement with respect to such oversizing and associated impact fee credits related thereto.

10. City and Developer now desire to set forth in writing the terms and conditions regarding the foregoing.

NOW, THEREFORE, in consideration of the mutual covenants, premises and promises hereinafter set forth, the receipt, adequacy and sufficiency of which are hereby acknowledged, the City and the Developer hereby agree as follows:

1. **Recitals**. The foregoing recitals are true and correct in all respects and are expressly incorporated herein by reference.

2. **Transportation Improvements.**

   A. Construction plans for the Transportation Improvements must be approved by the City Engineer prior to commencing construction. The design of the Spine Road must comply with the City's design engineering standards.

   B. The Transportation Improvements may be constructed by the Developer in phases, as set forth in **Exhibit B** attached hereto and incorporated herein by this reference (the "**Spine Road Phasing Plan**").

   C. The Transportation Improvements consist of Segment A, Segment B, Segment C and Segment D as set forth on the Spine Road Phasing Plan, as generally described as follows:

Segment A. Generally, a two-lane divided road with a fifteen and a half (15.5) foot wide landscaped median, and an eleven (11) foot wide multi-use trail on the west side of the proposed right-of-way, and a round-about as illustrated within the Avian Pointe PUD Master Plan Amendment. Segment A will begin at Lust Road and will end at the proposed southern round-about. No on-street parking will occur on Segment A. Developer shall be responsible for construction of Segment A. No transportation impact fee credits shall be granted for the construction of Segment A. The final design of Segment A will be determined as part of the Preliminary Development Plan for the portion of the Property which includes Segment A.

Segment B. Generally, a two-lane divided road with minimum ten (10) foot wide median, and an eleven (11) foot wide multi-use trail on the west side of the proposed right-of-way, and a round-about as illustrated within the Avian Pointe PUD Master Plan Amendment. Segment B will begin at proposed southern round-about and will end at the proposed northern round-about. No on-street parking will occur on Segment B. Maintenance of the landscaping, trees, lawn and plants (aka Segment B green area) within the Segment B right-of-way and median shall be initially maintained by the Master Association (as described in the Master Development Agreement). Developer shall be responsible for construction of Segment B. Developer of Phases A and B-1 shall be responsible for planting of trees and landscaping within Segments A and B-1.

Segment C. At minimum, a two-lane undivided road ("Undivided North Spine Road") and a round-about as illustrated within the Avian Pointe PUD Master Plan Amendment, otherwise complying with the Apopka Code of Ordinances ("Code"). However, if the City is able to secure a 30-foot wide right-of-way from the property abutting Segment C to the West and notifies Developer, in writing, of such acquisition on or before December 20, 2018, in lieu of the Undivided North Spine Road, Developer shall construct a two-lane divided road with minimum ten (10) foot wide median and an eleven (11) foot wide multi-use trail on the west side of the proposed right-of-way ("Divided North Spine Road"). Should Developer construct the Divided North Spine Road, Developer shall be entitled to Road Impact Fee Credits ("Credits") for the increase in design, engineering, permitting and construction costs incurred as between an Undivided North Spine Road and the Divided North Spine Road, as provided by Section 26-81 of the Code. To be eligible for reimbursement through the Credits, Developer must submit proposed Divided North Spine Road expenditures to the City for prior approval by the City Administrator or his/her designee before incurring said expenditures. Such proposed expenditures shall include sufficient documentation establishing that each proposed cost is reasonably necessary for the construction of the Divided North Spine Road as described herein and depicted on the PUD. Following completion of Segment C, the City shall promptly credit on its books to the account of Developer for the amount of the Credits. Segment C will begin at the proposed northern round-about and will end at Peterson Road. No on-street parking will occur on Segment C. Developer shall be responsible for construction of Segment C.

Segment D. Generally, Segment D shall be the off-site extension of a twelve (12) inch potable water line along Peterson Road and King Street existing right of way, connecting to existing water main at West Orange Avenue.

The Avian Pointe Master Association shall be responsible for maintaining all landscaping and trees within Segments A, B and C following the City's acceptance of the right-of-way and road improvements. This responsibility shall continue in perpetuity until the Master Association and the City agree to alternatively delineated maintenance responsibilities in writing. The City may terminate Developer's maintenance responsibilities over Segments A, B and C with or without cause on thirty (30) days' written notice.

Thereafter, maintenance shall be performed by the City in a manner at the sole discretion of the City.

D. The foregoing transportation improvements set forth in Section 2 of this Agreement shall hereinafter be referred collectively be referred to as the "**Spine Road Segments Scope of Work**".

E. The Developer shall construct the Transportation Improvements for Segment A as depicted on the Spine Road Phasing Plan in connection with the initial phase of the Avian Pointe Project which shall not exceed 455 total multifamily units approved in the PUD.

F. In order for Developer to construct in excess of 455 multifamily dwelling units or any approved use on the Flex Use Parcel (B-5), Developer shall (i) (i) construct the Transportation Improvements for Segment B and Segment C consistent with the Spine Road Segments Scope of Work and (ii) install the potable water line for Segment D consistent with the Spine Road Segments Scope of Work.

G. The Transportation Improvements shall be conveyed by the Developer to City in connection with the platting of the Avian Pointe Project. It is anticipated that the plat will be phased.

3. **City Right-of-Way.**

A. In connection with the City's issuance of a right-of-way permit to Developer for the purposes of constructing the Transportation Improvements (hereinafter the "**Improvements**"), such permit issuance shall grant to Developer the right to perform the Improvements in all areas where the Improvements are to be located within public right-of-way or on property otherwise owned by the City.

B. The City and Developer acknowledge that Developer may need to obtain certain approvals from Orange County in order to perform the Improvements. The City agrees to cooperate with Developer in connection with such County approvals.

C. The City shall have the right, but not the obligation, to inspect the Improvements during construction.

4. **Conveyance of Improvements.**

A. Developer shall, at is sole cost and expense, convey the Improvements, including Segments A, B and C to the extent the same are under the control by Developer, to the City free and clear of all liens and encumbrances, within ten (10) business days of the issuance of a certificate of completion for the Improvements by the City and any other governmental agency, including the County, with authority over the Improvements.

B. As evidence of such transfer and conveyance, Developer shall convey each component of the Improvements to the City by separate Bill of Sale. Developer shall also grant an access and maintenance easement in favor of the City with respect to the Improvements at the same of such transfer and conveyance.

C. Final acceptance ("**Final Acceptance**") of each component of the Improvements by the City shall occur upon satisfaction of the following:

a. Completion of construction of the particular component of the Improvements in accordance with the plans and specifications as approved by the City in the permitting process.

b. Delivery to City of one (1) complete set of record drawings with AutoCAD files and specifications certified by Developer's engineer.

c. Developer's assigning all warranties Developer has obtained from its contractors, suppliers, and/or materialmen with respect to the construction of the Improvements and materials used therein.

Provided all such conditions are met, the City agrees to accept such conveyance without delay, and shall thereafter be responsible for the operation and maintenance of the Improvements so conveyed to the City. As part of such conveyance, Developer agrees to warrant the Improvements so conveyed for a period of one (1) year from the date of acceptance by the City. In the event that the City initiates an annexation of any portion of the Property on which the Improvements are located, Developer agrees to support any such annexation.

5. **Documentation from Developer.** The Developer shall submit to the City from the Developer's project engineer, contractor's affidavits, and certificates from the project engineer.

6. **Development Approvals.** This Agreement shall in no manner constitute a development approval regarding the Property or the Avian Pointe Project. Developer must comply with all applicable provisions of the City's Code and Land Development Code regarding the development of the Property and the Avian Pointe Project.

7. **Deed Restriction.** The Property was subject to that certain Deed Restriction recorded among the Public Records of Orange County, Florida at Official Records Book 10890, Page 4137 (the "**Deed Restriction**"). The Deed Restriction was previously properly terminated and remains of no further force or effect.

8. **Disclaimer of Third Party Beneficiaries.** This Agreement is for the sole benefit of the parties hereto, and no right of action shall accrue upon or by reason hereof, to or for the benefit of any third party. Nothing in this Agreement either express or implied, is intended or shall be construed to confer upon or give any person, corporation or governmental entity, other than the parties hereto, any right, remedy or claim under or by reason of this Agreement or any provisions

or conditions hereof, and all of the provisions, representations, covenants and conditions herein contained shall inure to the sole benefit of and shall be binding upon the parties hereto and their respective representatives, successors and assigns.

9. **Successors and Assigns.** This Agreement shall be binding upon and inure to the benefit of the parties hereto and their respective successors and assigns.

10. **Waiver; Modification.** The failure by any party to insist upon or enforce any of its rights shall not constitute a waiver thereof and nothing shall constitute a waiver of any party's right to insist upon strict compliance with the terms of this Agreement. Any party may waive the benefit of any provision or condition for its benefit which is contained herein. No oral modification of this Agreement shall be binding upon the parties and any modification must be in writing and signed.

11. **Governing Law.** This Agreement shall be governed by and construed under the laws of the State of Florida.

12. **Application; Effect.** If any provision of this Agreement or the application thereof to any party, person or circumstance shall be held or deemed to be invalid or unenforceable to any extent, the remainder of this Agreement and the application of such provisions to other parties, persons, or circumstances shall not be affected thereby and shall be enforced to the greatest extent permitted by law.

13. **Notices.** Any notices which may be permitted or required hereunder shall be in writing and shall be deemed to have been duly given as of the date and time the same are personally delivered, transmitted electronically (i.e. telecopier device) or within three (3) days after depositing the United State Postal Services, postage prepaid by registered or certified mail, return receipt requested, or within one (1) day after depositing with Federal Express or other overnight delivery service from which a receipt may be obtained, and addressed as follows:

City: Edward Bass, City Administrator
120 East Main Street
Apopka, Florida 32703
Telephone: (407) 703-1712

Copy to: Cliff Shepard, Esq.
Shepard, Smith, Kohlmyer & Hand, P.A.
2300 Maitland Center Parkway, Suite 100
Maitland, Florida 32751
Telephone: (407) 622-1772

Developer: Apopka Clear Lake Investments, LLC
Attention: Ken Stoltenberg and Frank Bombeeck
1810 West Kennedy Blvd, Suite 232
Tampa, Florida 33606
Telephone: (813) 321-1984

Copy to: Thomas R. Sullivan, Esq.
GrayRobinson, P.A.
301 E. Pine Street, Suite 1400
Orlando, Florida 32801
Telephone: (407) 375-7740

14. **Attorney's Fees.** In the event of any dispute hereunder for any action to interpret or enforce this Agreement, any provision hereof or any matter arising herefrom, the prevailing party shall be entitled to recover its reasonable cost, fee, expenses, including, but not limited to, witness fees, expert fees, consultant fees, attorney, paralegal and legal assistant fees, costs and expenses and other professional fees, costs, and expenses, whether suit be brought or not, and whether in settlement, in any declaratory action, at trial or on appeal.

15. **Performance.** Time is of the essence in the performance of this Agreement.

16. **Traffic Capacity**. The City acknowledges that the City has reserved sufficient traffic capacity for the entire Avian Pointe Project. The City further acknowledges that the performance of the Spine Road Improvements as set forth herein satisfies all transportation improvement obligations, including but not limited to operational improvements, necessary for the full build out of the Avian Pointe Project.

17. **Consistency**. To the extent any provisions of this Agreement are inconsistent with, or are more specific than, the PUD, this Agreement controls.

IN WITNESS WHEREOF, the parties hereto have caused this Agreement to be executed in form and manner sufficient to bind them as of the date indicated hereinabove

.[SIGNATURES APPEAR ON FOLLOWING PAGES]

Witnesses:

Printed Name: Karen Chancey

Printed Name: DON SCALF

APOPKA CLEAR LAKE INVESTMENTS, LLC,
a Florida limited liability company

By:
Name: F. Bombeck
Title: Managing member

STATE OF FLORIDA
COUNTY OF Hillsborough

The foregoing instrument was acknowledged before me this 19th day of September, 2018, by Frank Bombeck, as Managing Member of Apopka Clear Lake Investments, LLC, a Florida limited liability company, who is known to me ✓ or who produced _____ as identification on behalf of the company.

Notary Public
State of Florida at Large

My Commission Expires: July 19, 2019

KAREN CHANCEY
MY COMMISSION # FF 211094
EXPIRES: July 17, 2019
Bonded Thru Notary Public Underwriters

[SIGNATURES CONTINUED ON FOLLOWING PAGE]

CITY OF APOPKA

By: Bryan Nelson
Mayor

ATTEST:

Linda Goff
_____, City Clerk

Approved as to Form:

Clifford B. Shepard
Clifford B. Shepard, City Attorney

STATE OF FLORIDA
COUNTY OF ORANGE

The foregoing instrument was acknowledged before me this 19th day of September, 2018, by Bryan Nelson, who is known to me ✓ or produced ___ as identification as Mayor of the City of Apopka, Florida, a municipal corporation of the State of Florida, on behalf of the City of Apopka, Florida.

Susa M Bone
Notary Public
State of Florida at Large

My Commission Expires:

Susan M. Bone
NOTARY PUBLIC
STATE OF FLORIDA
Comm# GG182400
Expires 4/25/2022

EXHIBIT LIST
Transportation Agreement

EXHIBIT A	Description of the Property
EXHIBIT B	Spine Road Phasing Plan

Exhibit "A": Transportation Agreement
Description of the Property

PARCEL I.D. NUMBERS: PARCEL I.D. NUMBERS: 07-21-28-0000-00-002, 07-21-28-0000-00-015; 07-21-28-0000-00-064

PARCEL A LEGAL DESCRIPTION: (PARCEL ID # 07-21-28-0000-00-015)
THE WEST 1/2 OF THE EAST 1/2 OF THE SOUTHEAST 1/4 OF THE NORTHWEST 1/4 OF SECTION 7, TOWNSHIP 21 SOUTH, RANGE 28 EAST; EAST 1/2 OF THE WEST 1/2 OF THE SOUTHEAST 1/4 OF THE NORTHWEST 1/4 OF SECTION 7, TOWNSHIP 21 SOUTH, RANGE 28 EAST; EAST 1/4 OF THE SOUTHEAST 1/4 OF THE NORTHWEST 1/4 OF SECTION 7, TOWNSHIP 21 SOUTH, RANGE 28 EAST, AND; BEGINNING AT THE SOUTHEAST CORNER OF THE NORTHEAST 1/4 OF THE NORTHWEST 1/4 OF SECTION 7, TOWNSHIP 21 SOUTH, RANGE 28 EAST, RUN THENCE WEST 160 FEET, THENCE NORTH 7° 18' EAST 277.24 FEET, THENCE EAST 124.78 FEET, THENCE SOUTH 275 FEET TO THE P.O.B., ALL IN ORANGE COUNTY, FLORIDA.

PARCEL B LEGAL DESCRIPTION: (PARCEL ID # 07-21-28-0000-00-002)
PARCEL 1:
COMMENCE AT THE NORTHWEST CORNER OF SECTION 7, TOWNSHIP 21 SOUTH, RANGE 28 EAST, ORANGE COUNTY, FLORIDA, THENCE RUN SOUTH 01 DEGREES 00 MINUTES 22 SECONDS WEST A DISTANCE OF 2632.98 FEET TO A FOUND 4X4 CONCRETE MONUMENT, SAID MONUMENT BEING THE POINT OF BEGINNING; THENCE RUN SOUTH 89 DEGREES 53 MINUTES 02 SECONDS EAST A DISTANCE OF 100 FEET; THENCE RUN NORTH 01 DEGREES 00 MINUTES 22 SECONDS WEST A DISTANCE OF 1316.28 FEET; THENCE RUN SOUTH 89 DEGREES 45 MINUTES 54 SECONDS EAST A DISTANCE OF 1551.76 FEET; THENCE RUN SOUTH 00 DEGREES 26 MINUTES 18 SECONDS WEST A DISTANCE OF 1312.93 FEET, THENCE RUN NORTH 89 DEGREES 53 MINUTES 02 SECONDS WEST A DISTANCE OF 332.97 FEET TO A FOUND AXLE AT THE NORTHWEST CORNER OF THE NORTHEAST 1/4 OF THE SOUTHWEST 1/4 OF SECTION 7, TOWNSHIP 21 SOUTH, RANGE 28 EAST; THENCE RUN SOUTH 00 DEGREES 09 MINUTES 28 SECONDS EAST A DISTANCE OF 1875.24 FEET; THENCE RUN NORTH 89 DEGREES 47 MINUTES 20 SECONDS WEST A DISTANCE OF 516.81 FEET TO A POINT OF CURVATURE OF A NON-TANGENT CURVE BEING CONCAVE SOUTHWESTERLY, HAVING A RADIUS OF 597.96 FEET, A CHORD BEARING OF NORTH 54 DEGREES 41 MINUTES 55 SECONDS WEST, A CENTRAL ANGLE OF 5 DEGREES 10 MINUTES 09 SECONDS, THENCE RUN ALONG ARE OF SAID CURVE A DISTANCE OF 53.95 FEET; THENCE RUN NORTH 57 DEGREES 14 MINUTES 32 SECONDS WEST A DISTANCE OF 501.39 FEET TO A POINT OF CURVATURE OF A CURVE CONCAVE NORTHEASTERLY, HAVING A RADIUS OF 547.96 FEET, A CHORD BEARING OF NORTH 39 DEGREES 16 MINUTES 28 SECONDS WEST, A CENTRAL ANGLE OF 35 DEGREES 56 MINUTES 07 SECONDS, THENCE RUN ALONG ARC OF SAID CURVE A DISTANCE OF 343.68 FEET; THENCE RUN NORTH 89 DEGREES 50 MINUTES 05 SECONDS WEST A DISTANCE OF 131.12 FEET; THENCE RUN NORTH 00 DEGREES 24 MINUTES 43 SECONDS WEST A DISTANCE OF 1311.51 FEET TO THE POINT OF BEGINNING.
AND:
PARCEL 2:
A TRACT OF LAND LYING IN SECTION 7, TOWNSHIP 21 SOUTH, RANGE 28 EAST, DESCRIBED AS FOLLOWS:
COMMENCE AT THE SOUTHWEST CORNER OF THE ABOVE-REFERENCED SECTION 7 FOR A POINT OF REFERENCE; THENCE RUN SOUTH 89°47'20" EAST, ALONG THE SOUTH LINE OF SAID SECTION, 1024.58 FEET TO A POINT OF BEGINNING; THENCE DEPARTING SAID SOUTH SECTION LINE, RUN NORTH 00°12'40" EAST, 274.53 FEET TO A POINT OF CURVATURE OF A CURVE CONCAVE SOUTHWESTERLY; THENCE RUN NORTHWESTERLY ALONG SAID CURVE, HAVING A RADIUS OF 305.00 FEET, A CENTRAL ANGLE OF 30°33'31", AN ARC LENGTH OF 162.67 FEET, A

CHORD LENGTH OF 160.75 FEET, AND A CHORD BEARING OF NORTH 15°04'06" WEST TO A POINT OF REVERSE CURVATURE OF A CURVE CONCAVE NORTHEASTERLY; THENCE RUN NORTHWESTERLY ALONG SAID CURVE, HAVING A RADIUS OF 245.00 FEET, A CENTRAL ANGLE OF 22°15'56", AN ARC LENGTH OF 95.21 FEET, A CHORD LENGTH OF 94.61 FEET, AND A CHORD BEARING OF NORTH 19°12'53" WEST TO A POINT OF REVERSE CURVATURE OF A CURVE CONCAVE SOUTHWESTERLY; THENCE RUN NORTHWESTERLY ALONG SAID CURVE, HAVING A RADIUS OF 305.00 FEET, A CENTRAL ANGLE OF 34°15'29", AN ARC LENGTH OF 182.36 FEET, A CHORD LENGTH OF 179.66 FEET AND A CHORD BEARING OF NORTH 25°12'40" WEST TO A POINT OF COMPOUND CURVATURE OF A CURVE CONCAVE SOUTHWESTERLY; THENCE RUN NORTHWESTERLY ALONG SAID CURVE, HAVING A RADIUS OF 597.96 FEET, A CENTRAL ANGLE OF 09°46'25", AN ARC LENGTH OF 102.00 FEET, A CHORD LENGTH OF 101.88 FEET, AND A CHORD BEARING OF NORTH 47°13'37" WEST; THENCE RUN SOUTH 89°47'20" EAST, NON-TANGENT TO SAID CURVE, 516.82 FEET TO THE EAST LINE OF THE SOUTHWEST 1/4 OF THE SOUTHWEST 1/4 OF SAID SECTION 7; THENCE RUN SOUTH 00°09'22" EAST, ALONG SAID EAST LINE, 750.02 FEET TO THE SOUTHEAST CORNER OF THE SOUTHWEST 1/4 OF THE SOUTHWEST 1/4 OF SAID SECTION 7; THENCE RUN NORTH 89°47'20" WEST, ALONG SAID SOUTH SECTION LINE, 295.64 FEET TO THE POINT OF BEGINNING.

LESS AND EXCEPT RIGHT OF WAY FOR LUST ROAD AS DESCRIBED IN RIGHT-OF-WAY AGREEMENT RECORDED IN O.R. BOOK 521, PAGE 280; AND RIGHT-OF-WAY AGREEMENT RECORDED IN O.R. BOOK 538, PAGE 604, AS RE-RECORDED IN O.R. BOOK 554, PAGE 510, PUBLIC RECORDS OF ORANGE COUNTY, FLORIDA.

ALSO LESS AND EXCEPT THOSE PORTIONS DESCRIBED IN STIPULATED ORDER OF TAKING RECORDED IN O.R. BOOK 10106, PAGE 2611, PUBLIC RECORDS OF ORANGE COUNTY, FLORIDA.

AND TOGETHER WITH:

A PARCEL OF LAND SITUATED IN SECTION 7, TOWNSHIP 21 SOUTH, RANGE 28 EAST, ORANGE COUNTY, FLORIDA, BEING MORE PARTICULARLY DESCRIBED AS FOLLOWS: COMMENCE AT THE SOUTHWEST CORNER OF SECTION 7, TOWNSHIP 21 SOUTH, RANGE 28 EAST, ORANGE COUNTY, FLORIDA; THENCE RUN NORTH 00°23'17" EAST, ALONG THE WEST LINE OF THE SOUTHWEST 1/4 OF SAID SECTION 7, FOR A DISTANCE OF 30.00 FEET TO A POINT ON THE NORTH RIGHT OF WAY LINE OF LUST ROAD, AS RECORDED IN DEED BOOK 521, PAGE 280 OF THE PUBLIC RECORDS OF ORANGE COUNTY, FLORIDA; THENCE DEPARTING SAID WEST LINE, RUN NORTH 89°39'36" EAST, ALONG THE SAID NORTH RIGHT OF WAY LINE, FOR A DISTANCE OF 1155.54 FEET TO A POINT ON THE EASTERLY LIMITED ACCESS RIGHT OF WAY LINE OF STATE ROAD 429 PER ORLANDO/ORANGE COUNTY EXPRESSWAY AUTHORITY RIGHT OF WAY MAP PROJECT NUMBER 429-201, SAID POINT LYING ON A CURVE, CONCAVE SOUTHWESTERLY, HAVING A RADIUS OF 8150.00 FEET, A CHORD BEARING OF NORTH 26°36'44" WEST AND A CHORD DISTANCE OF 720.85 FEET; THENCE DEPARTING SAID NORTH RIGHT OF WAY LINE, RUN NORTHWESTERLY ALONG THE ARC OF SAID CURVE, AND SAID LIMITED ACCESS RIGHT OF WAY LINE, THROUGH A CENTRAL ANGLE OF 05°04'10" FOR AN ARC DISTANCE OF 721.09 FEET TO A POINT OF TANGENCY; THENCE RUN NORTH 29°08'49" WEST, ALONG SAID LIMITED ACCESS RIGHT OF WAY LINE, FOR A DISTANCE OF 75.30 FEET TO THE POINT OF BEGINNING; THENCE CONTINUE NORTH 29°08'49" WEST, ALONG SAID LIMITED ACCESS RIGHT OF WAY LINE, FOR A DISTANCE OF 34.79 FEET TO A POINT ON A NON-TANGENT CURVE, CONCAVE SOUTHWESTERLY, HAVING A RADIUS OF 597.96 FEET, A CHORD BEARING OF SOUTH 52°05'17" EAST AND A CHORD DISTANCE OF 49.59 FEET; THENCE DEPARTING SAID LIMITED ACCESS RIGHT OF WAY LINE, RUN SOUTHEASTERLY ALONG THE ARC OF SAID CURVE THROUGH A CENTRAL ANGLE OF 04°45'11" FOR AN ARC DISTANCE OF 49.60 FEET TO A POINT; THENCE DEPARTING SAID CURVE, RUN NORTH 89°47'20" WEST FOR A DISTANCE OF 22.18 FEET TO THE POINT OF BEGINNING.

AND TOGETHER WITH:

A PARCEL OF LAND SITUATED IN SECTION 7, TOWNSHIP 21 SOUTH, RANGE 28 EAST, ORANGE COUNTY, FLORIDA, BEING MORE PARTICULARLY DESCRIBED AS FOLLOWS:

COMMENCE AT THE SOUTHWEST CORNER OF SECTION 7, TOWNSHIP 21 SOUTH, RANGE 28 EAST, ORANGE COUNTY, FLORIDA; THENCE RUN NORTH 00°23'17" EAST, ALONG THE WEST LINE OF THE SOUTHWEST 1/4 OF SAID SECTION 7, FOR A DISTANCE OF 30.00 FEET TO A POINT ON

THE NORTH RIGHT OF WAY LINE OF LUST ROAD, AS RECORDED IN DEED BOOK 521, PAGE 280 OF THE PUBLIC RECORDS OF ORANGE COUNTY, FLORIDA; THENCE DEPARTING SAID WEST LINE, RUN NORTH 89°39'36" EAST, ALONG THE SAID NORTH RIGHT OF WAY LINE, FOR A DISTANCE OF 1155.54 FEET TO A POINT ON THE EASTERLY LIMITED ACCESS RIGHT OF WAY LINE OF STATE ROAD 429 PER ORLANDO/ORANGE COUNTY EXPRESSWAY AUTHORITY RIGHT OF WAY MAP PROJECT NUMBER 429-201, SAID POINT LYING ON A CURVE, CONCAVE SOUTHWESTERLY, HAVING A RADIUS OF 8150.00 FEET, A CHORD BEARING OF NORTH 25°11'52" WEST AND A CHORD DISTANCE OF 318.73 FEET; THENCE DEPARTING SAID NORTH RIGHT OF WAY LINE, RUN NORTHWESTERLY ALONG THE ARC OF SAID CURVE, AND SAID LIMITED ACCESS RIGHT OF WAY LINE, THROUGH A CENTRAL ANGLE OF 02°14'27" FOR AN ARC DISTANCE OF 318.73 FEET TO THE POINT OF BEGINNING, SAID POINT BEING ON A CURVE, CONCAVE SOUTHWESTERLY, HAVING A RADIUS OF 8150.00 FEET, A CHORD BEARING OF NORTH 27°43'57" WEST AND A CHORD DISTANCE OF 402.39 FEET; THENCE CONTINUE ALONG THE ARC OF SAID CURVE, AND SAID LIMITED ACCESS RIGHT OF WAY LINE, THROUGH A CENTRAL ANGLE OF 02°49'42" FOR AN ARC DISTANCE OF 402.33 FEET TO A POINT OF TANGENCY; THENCE RUN NORTH 29°08'49" WEST, ALONG SAID LIMITED ACCESS RIGHT OF WAY LINE, FOR A DISTANCE OF 75.30 FEET; THENCE DEPARTING SAID LIMITED ACCESS RIGHT OF WAY LINE, RUN SOUTH 89°47'20" EAST FOR A DISTANCE OF 22.18 FEET TO THE POINT OF CURVATURE OF A CURVE, CONCAVE SOUTHWESTERLY HAVING A RADIUS OF 597.96 FEET, A CHORD BEARING OF SOUTH 45°41'26" EAST AND A CHORD DISTANCE OF 83.86 FEET; THENCE RUN SOUTHEASTERLY ALONG THE ARC OF SAID CURVE THROUGH A CENTRAL ANGLE OF 08°02'31" FOR AN ARC DISTANCE OF 83.93 FEET TO THE POINT OF COMPOUND CURVATURE OF A CURVE, CONCAVE SOUTHWESTERLY, HAVING A RADIUS OF 245.00 FEET, A CHORD BEARING OF SOUTH 24°32'26" EAST AND A CHORD DISTANCE OF 179.66 FEET; THENCE RUN SOUTHEASTERLY ALONG THE ARC OF SAID CURVE THROUGH A CENTRAL ANGLE OF 43°01'07" FOR AN ARC DISTANCE OF 183.95 FEET TO THE POINT OF REVERSE CURVATURE OF A CURVE, CONCAVE NORTHEASTERLY, HAVING A RADIUS OF 245.00 FEET, A CHORD BEARING OF SOUTH 18°32'40" EAST AND A CHORD DISTANCE OF 94.61 FEET; THENCE RUN SOUTHEASTERLY ALONG THE ARC OF SAID CURVE THROUGH A CENTRAL ANGLE OF 22°15'55" FOR AN ARC DISTANCE OF 95.21 FEET TO THE POINT OF REVERSE CURVATURE OF A CURVE, CONCAVE SOUTHWESTERLY, HAVING A RADIUS OF 305.00 FEET, A CHORD BEARING OF SOUTH 18°34'31" EAST AND A CHORD DISTANCE OF 116.11 FEET; THENCE RUN SOUTHEASTERLY ALONG THE ARC OF SAID CURVE THROUGH A CENTRAL ANGLE OF 21°56'42" FOR AN ARC DISTANCE OF 116.82 FEET TO THE POINT OF BEGINNING

PARCEL NORTH LEGAL DESCRIPTION: (PARCEL ID # 07-21-28-0000-00-064)

THE WEST 50.00 FEET OF THE EAST 1/2 OF THE WEST 1/2 OF THE NORTHEAST 1/4 OF THE NORTHWEST 1/4 OF SECTION 7, TOWNSHIP 21 SOUTH, RANGE 28 EAST, ORANGE COUNTY, FLORIDA, LESS THE NORTH 30.00 FEET FOR RIGHT OF WAY.

Exhibit "B": Transportation Agreement
Spine Road Phasing Plan

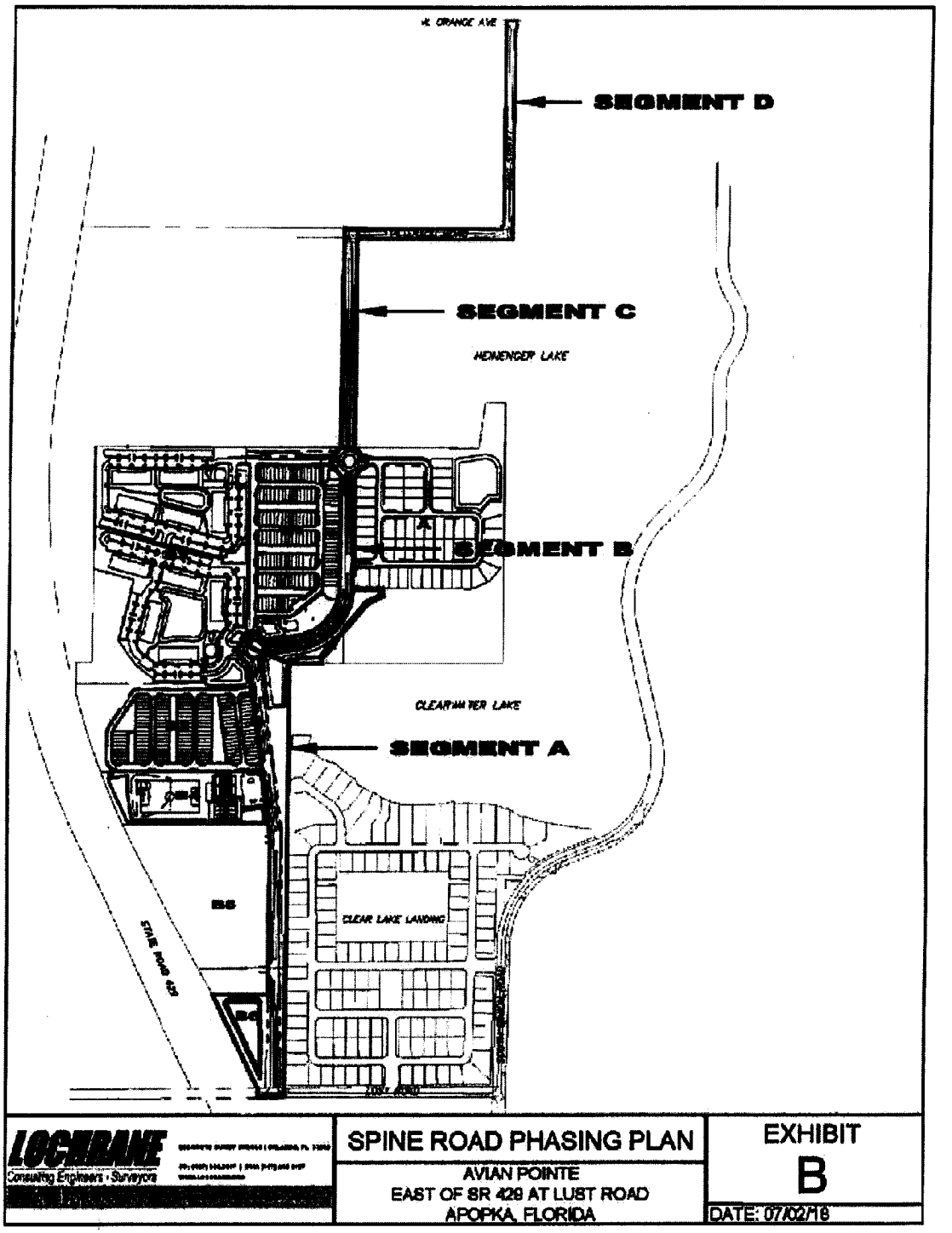

Exhibit "D"

Road Delineation Plan (Internal Streets)

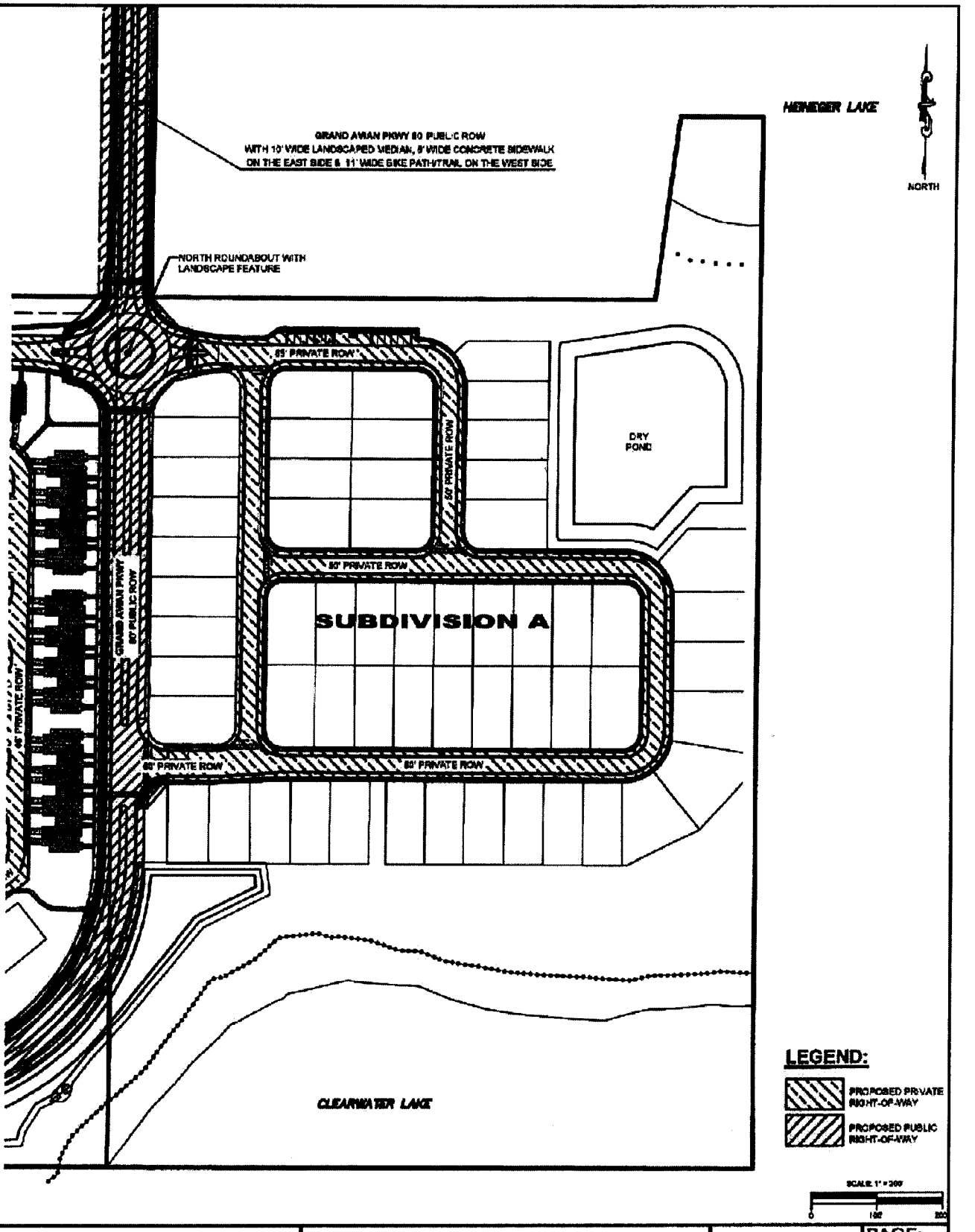

N V 5	201 S. BUMBY AVE. ORLANDO, FL (407) 896-3317 WWW.NV5.COM CERTIFICATE OF AUTHORIZATION # 23065	ROAD DELINIATION PLAN AVIAN POINTE EAST OF SR 429 AT LUST ROAD APOPKA, FLORIDA	EXHIBIT D DATE: 08/22/18

PAGE: 1 OF 5

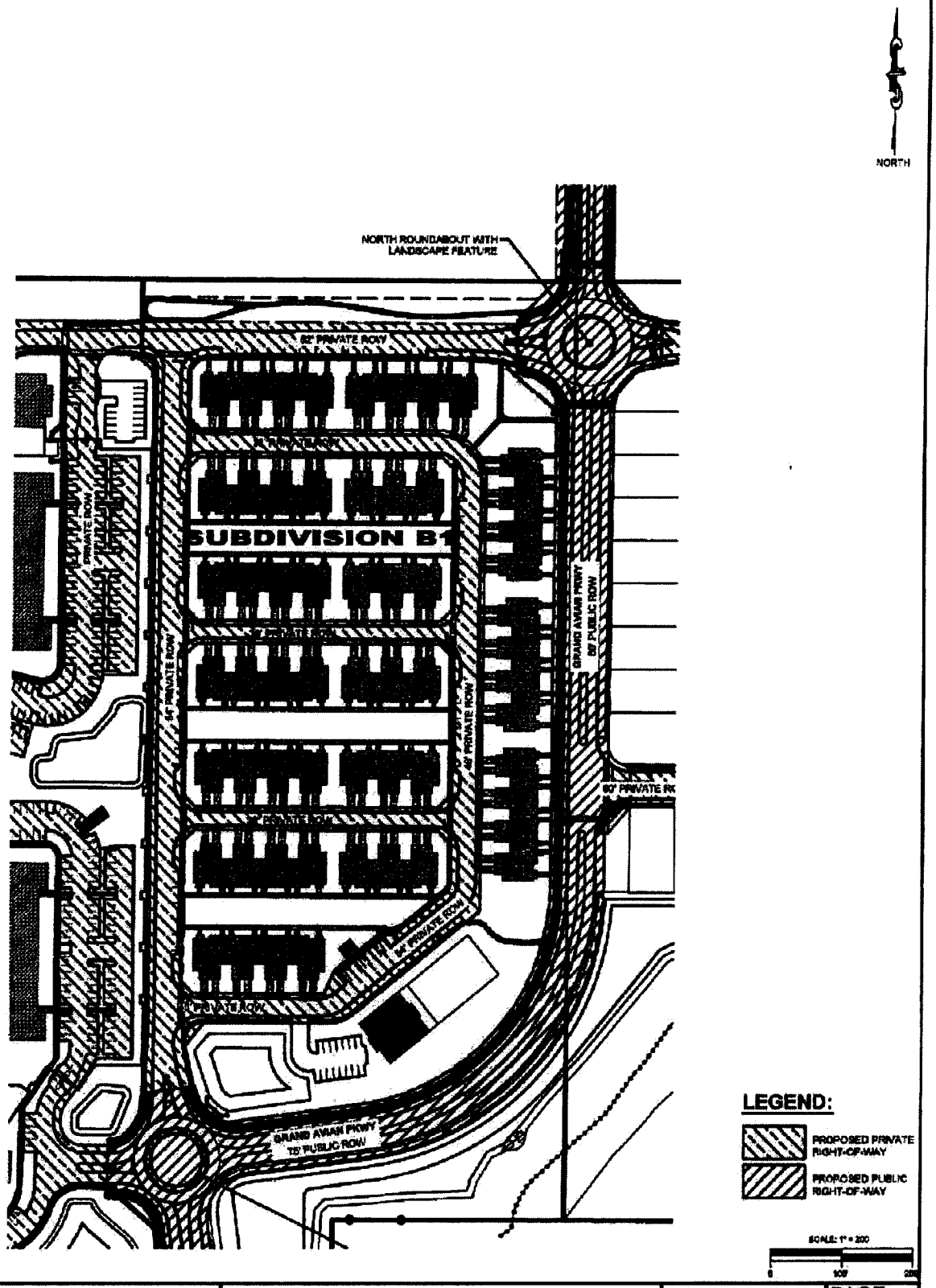

N V 5

201 S. BUMBY AVE.
ORLANDO, FL
(407) 896-5317
WWW.NV5.COM

CERTIFICATE OF AUTHORIZATION # 29095

ROAD DELINIATION PLAN

AVIAN POINTE
EAST OF SR 429 AT LUST ROAD
APOPKA, FLORIDA

EXHIBIT D

PAGE: 2 OF 5

DATE: 08/22/18

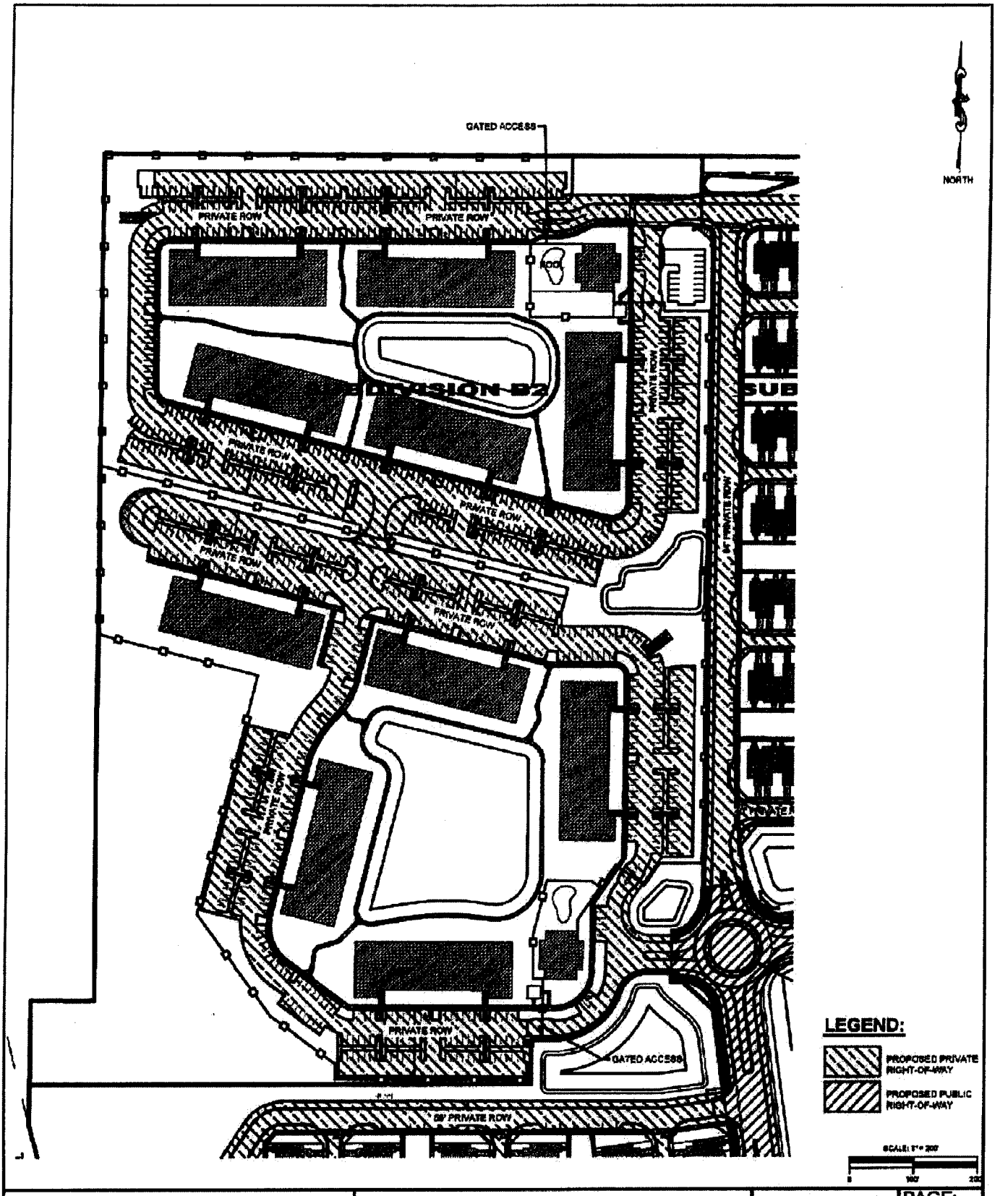

N V 5	201 S. BUMBY AVE. ORLANDO, FL (407) 896-3317 WWW.NV5.COM CERTIFICATE OF AUTHORIZATION # 28005	ROAD DELINIATION PLAN AVIAN POINTE EAST OF SR 429 AT LUST ROAD APOPKA, FLORIDA	EXHIBIT D PAGE: 3 OF 5 DATE: 08/22/18

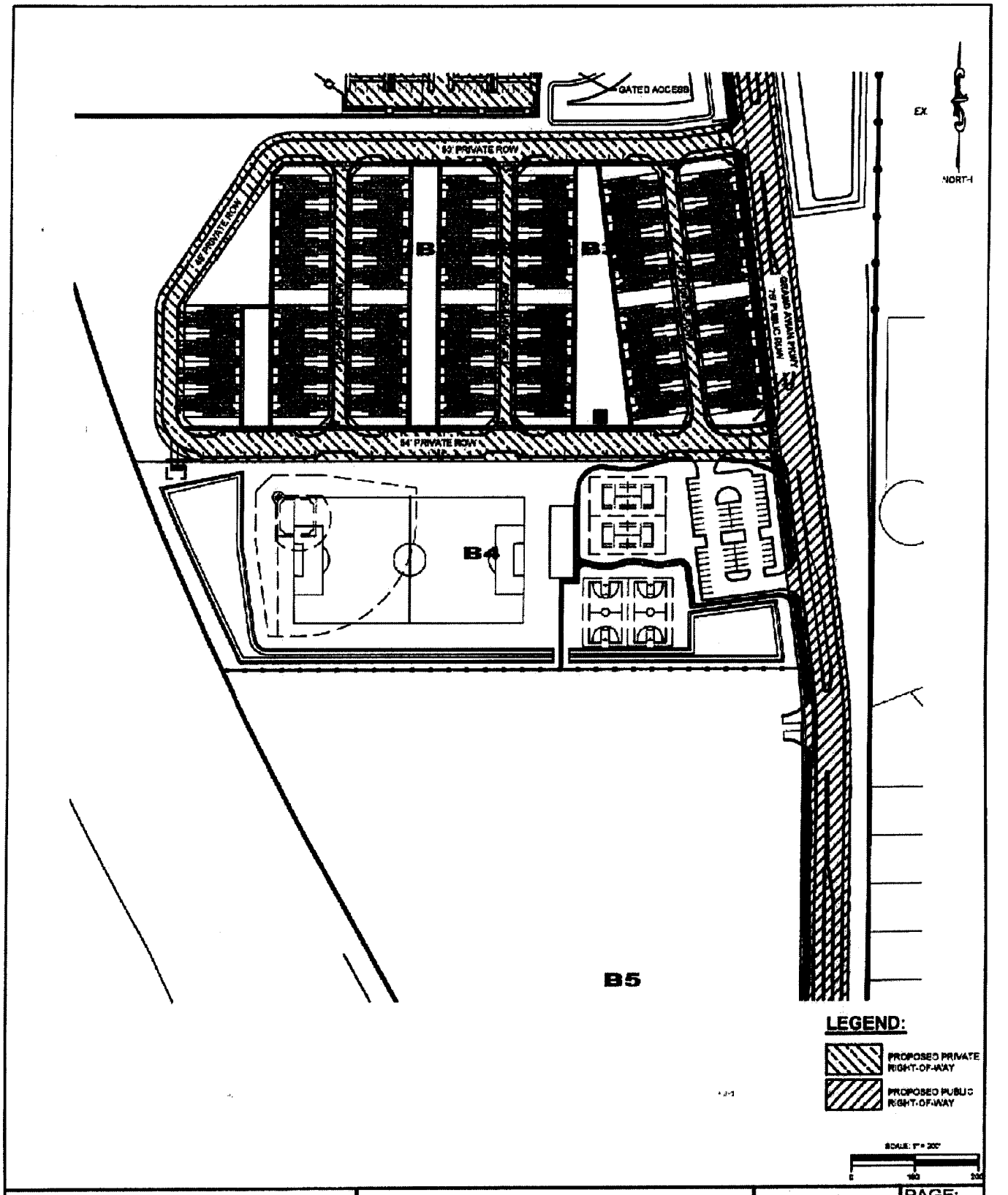

N V 5

201 S. BUMBY AVE.
ORLANDO, FL
(407) 896-3317
WWW.NV5.COM

CERTIFICATE OF AUTHORIZATION # 26895

ROAD DELINIATION PLAN

AVIAN POINTE
EAST OF SR 429 AT LUST ROAD
APOPKA, FLORIDA

EXHIBIT D

PAGE: 4 OF 5

DATE: 08/22/18

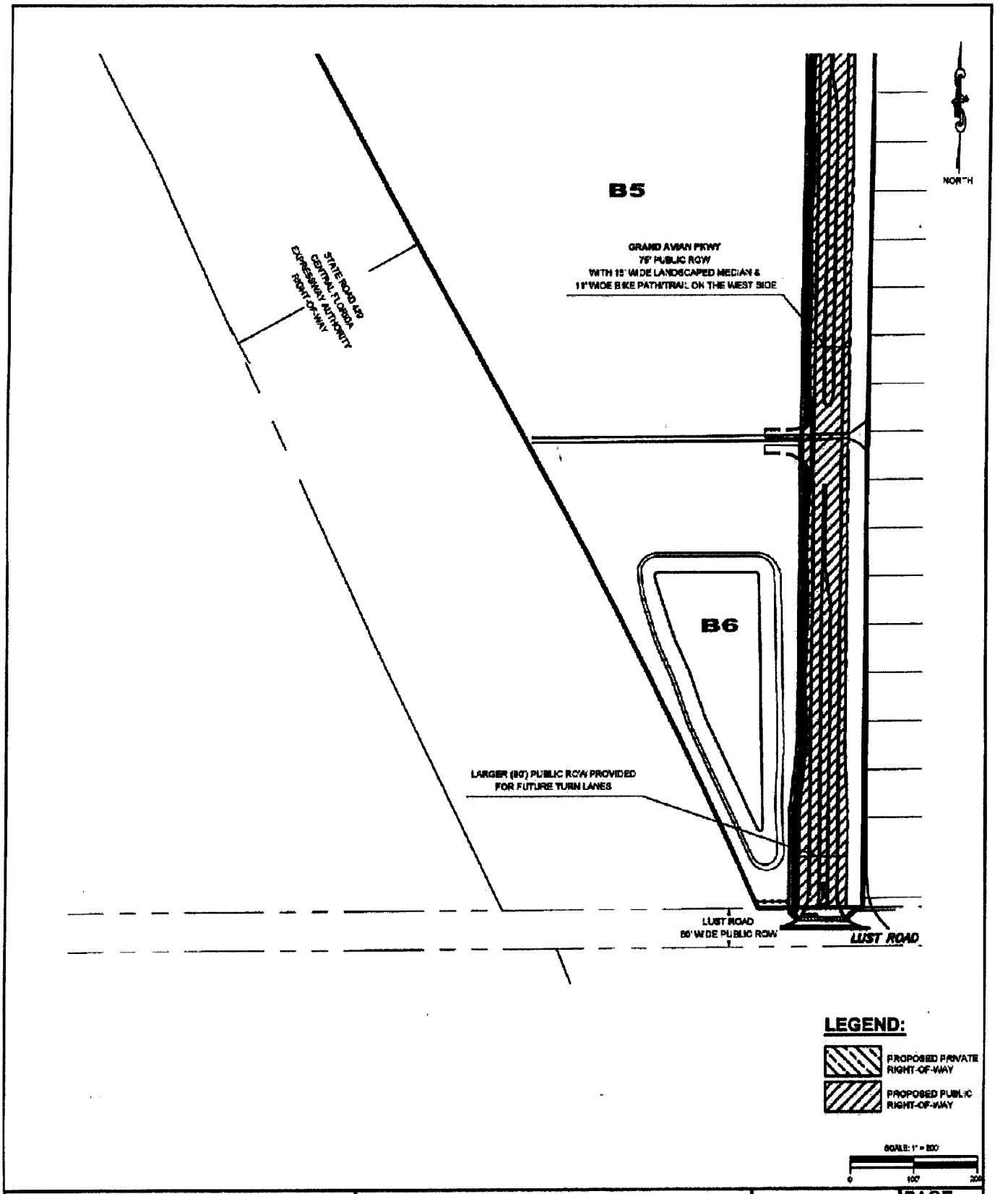

N V 5 — 201 S. BUMBY AVE. ORLANDO, FL (407) 896-5317 WWW.NV5.COM CERTIFICATE OF AUTHORIZATION # 29695	ROAD DELINIATION PLAN AVIAN POINTE EAST OF SR 429 AT LUST ROAD APOPKA, FLORIDA	EXHIBIT D	PAGE: 5 OF 5
		DATE: 08/22/18	

Exhibit "E"
Additional Luxury Apartment Amenity Features

Wireless High Speed Internet Access
Balcony/Porch
Fitness Center
Resort-style swimming pool
Dog Park
Walk-in showers
Energy-efficient appliances
Full-size washer and dryer available in two (2) and three (3) bedroom apartments
Full or stacked washer and dryer available in one-bedroom apartments
Walk-in closets
On-site security
Basketball court, tennis court and/or racquetball court
Bicycle trailers/bicycle racks
Bicycle and storage areas
Solid surface countertops
Corporate units
9-foot high ceilings
Business center in club house
Enclosed garage or covered parking spaces

DEVELOPMENT SUMMARY

PARKING SUMMARY

SUB-DIVISION	USE	TOTAL # OF UNITS	PARKING SPACE			
			REQUIRED PER UNIT	PROVIDED PER UNIT	ENCLOSED PER UNIT	OVERFLOW/ GUEST
A	SINGLE FAMILY	56	2	4	2	12
B1	TOWNHOMES	118	2	2	1	60
B2	APARTMENTS	480	SEE APARTMENT UNIT SUMMARY BELOW			
B3	TOWNHOMES	104	2	2	1	56
B4	COMMUNITY PARK	N/A	N/A	N/A	N/A	
B5	FLEX ZONE	N/A	PER LDC STANDARDS BY USE			

SUBDIVISION B2 APARTMENT UNIT SUMMARY

UNIT TYPE	LIVIBLE SF/UNIT	TOTAL # OF UNITS	% OF UNITS	PARKING SPACE	
				REQUIRED PER UNIT	TOTAL REQUIRED
1 BR OR STUDIO	750 SF (MIN)	180	38%	1.5 *	270
2 BR	900 SF (MIN)	260	54%	2	520
3 BR	1,050 SF (MIN)	40	8%	2	80

REQUIRED	870
PROVIDE **	870

* VARIANCE REQUIRED

** ADDITIONAL SPACES PENDING PRELIMINARY SITE PLAN DESIGN

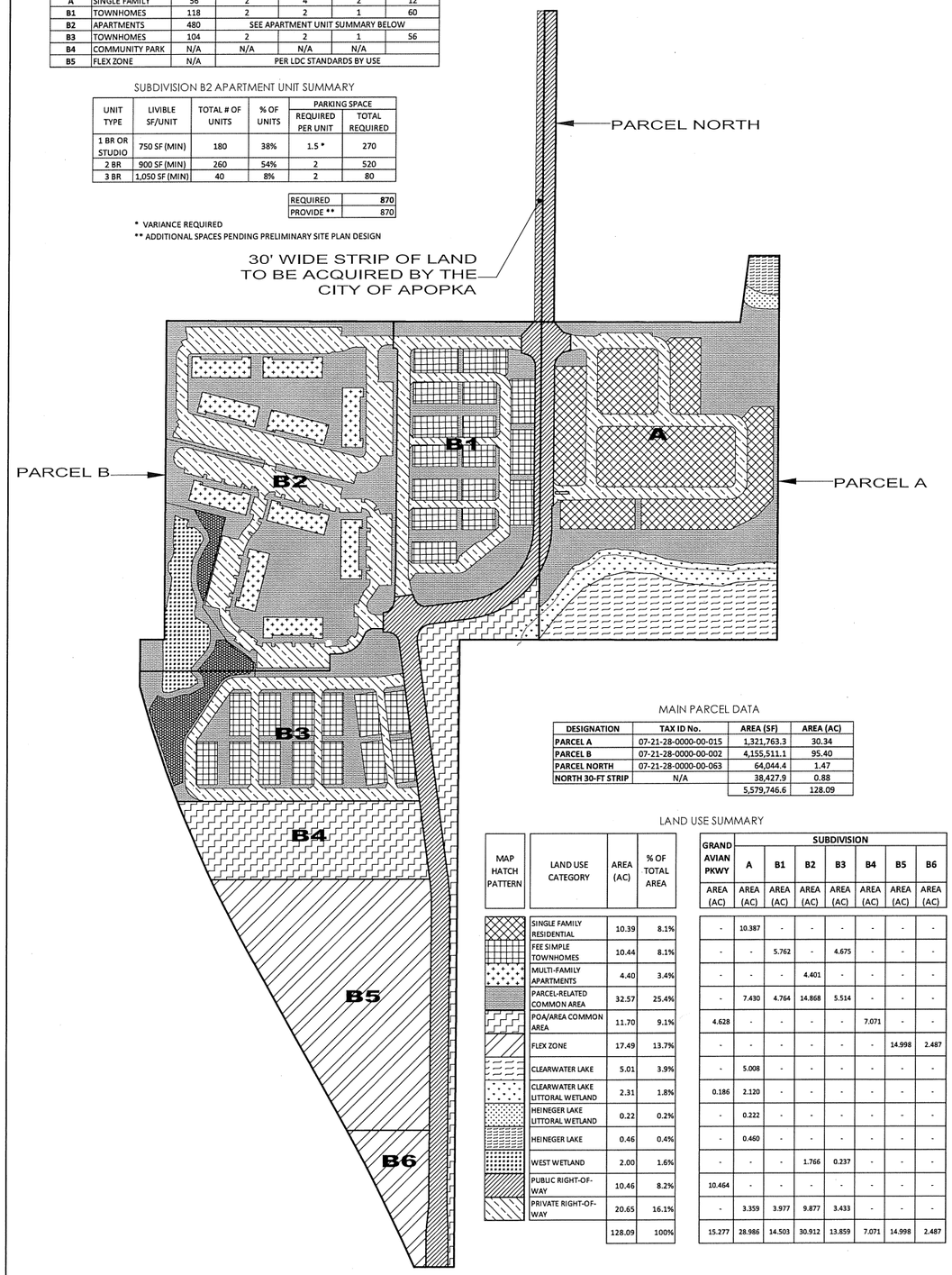

MAIN PARCEL DATA

DESIGNATION	TAX ID No.	AREA (SF)	AREA (AC)
PARCEL A	07-21-28-0000-00-015	1,321,763.3	30.34
PARCEL B	07-21-28-0000-00-002	4,155,511.1	95.40
PARCEL NORTH	07-21-28-0000-00-063	64,044.4	1.47
NORTH 30-FT STRIP	N/A	38,427.9	0.88
		5,579,746.6	128.09

LAND USE SUMMARY

MAP HATCH PATTERN	LAND USE CATEGORY	AREA (AC)	% OF TOTAL AREA	GRAND AVIAN PKWY	SUBDIVISION						
					A	B1	B2	B3	B4	B5	B6
				AREA (AC)	AREA (AC)	AREA (AC)	AREA (AC)	AREA (AC)	AREA (AC)	AREA (AC)	AREA (AC)
	SINGLE FAMILY RESIDENTIAL	10.39	8.1%	-	10.387	-	-	-	-	-	-
	FEE SIMPLE TOWNHOMES	10.44	8.1%	-	-	5.762	-	4.675	-	-	-
	MULTI-FAMILY APARTMENTS	4.40	3.4%	-	-	-	4.401	-	-	-	-
	PARCEL-RELATED COMMON AREA	32.57	25.4%	-	7.430	4.764	14.868	5.514	-	-	-
	POA/AREA COMMON AREA	11.70	9.1%	4.628	-	-	-	-	7.071	-	-
	FLEX ZONE	17.49	13.7%	-	-	-	-	-	-	14.998	2.487
	CLEARWATER LAKE	5.01	3.9%	-	5.008	-	-	-	-	-	-
	CLEARWATER LAKE LITTORAL WETLAND	2.31	1.8%	0.186	2.120	-	-	-	-	-	-
	HEINEGER LAKE LITTORAL WETLAND	0.22	0.2%	-	0.222	-	-	-	-	-	-
	HEINEGER LAKE	0.46	0.4%	-	0.460	-	-	-	-	-	-
	WEST WETLAND	2.00	1.6%	-	-	-	1.766	0.237	-	-	-
	PUBLIC RIGHT-OF-WAY	10.46	8.2%	10.464	-	-	-	-	-	-	-
	PRIVATE RIGHT-OF-WAY	20.65	16.1%	-	3.359	3.977	9.877	3.433	-	-	-
		128.09	100%	15.277	28.986	14.503	30.912	13.859	7.071	14.998	2.487

MASTER PLAN IS SUBJECT TO PRELIMINARY OR FINAL DEVELOPMENT PLAN APPROVAL

OVERALL MASTER PLAN

FLOODPLAIN NOTES:

1. PER FEMA FIRM MAP NO. 12095C0120F PARTS OF PARCEL A AND B ARE WITHIN FLOOD ZONES "A" AND "AE". FLOOD COMPENSATING VOLUME WILL BE PROVIDED FOR ALL FILL ENCROACHMENTS MADE TO THE EXISTING FLOODPLAIN.

WETLAND NOTES:

1. CLEAR WATER LAKE & LAKE HEINIGER; NO IMPACTS TO THESE WATER BODIES AND ASSOCIATED WETLANDS SHALL OCCUR. THEREFORE, NO MITIGATION SHOULD BE REQUIRED AS LONG AS AN UPLAND BUFFER OF 25-FT AVERAGE WIDTH AND 15-FT MINIMUM WIDTH IS PROVIDED BETWEEN THE WETLANDS AND PROPOSED DEVELOPMENT.
2. THE CLEAR WATER LAKE LITTORAL WETLAND LIMIT HAS BEEN DETERMINED AND ESTABLISHED AT ELEVATION 65-FT (NAVD88) CONTOUR LINE, PER SJRWMD.
3. WETLAND LOCATED AT THE WEST PROPERTY LINE, SOUTHWEST CORNER OF SUBDIVISION B2, IS OF LOW QUALITY, AND WILL REQUIRE COMPENSATORY MITIGATION FOR PROPOSED IMPACTS.

ROADWAY NOTES:

1. CURB RADIUS AT INTERSECTIONS AND APARTMENT BLOCK PERIMETERS SHALL BE 35' MINIMUM.
2. CURB RADIUS AT APARTMENT PARKING AISLE MEDIANS SHALL BE 25' MINIMUM.
3. ALL PAVING SHALL COMPLY WITH CITY OF APOPKA & FDOT DESIGN STANDARDS
4. PUBLIC RIGHTS OF WAY ALONG PROPOSED GRAND AVIAN PARKWAY AS FOLLOWS:

SEGMENT A (FROM LUST ROAD TO SOUTH ROUNDABOUT)	-	VARIES FROM 90' TO 75'
SEGMENT B (FROM SOUTH ROUNDABOUT TO NORTH ROUNDABOUT)	-	VARIES FROM 75' TO 80'
SEGMENT C (FROM NORTH ROUNDABOUT TO PETERSON ROAD)	-	80'

UTILITIES NOTES:

1. WATER & ELECTRIC SERVICES SHALL CONNECT TO EXISTING SERVICE POINTS LOCATED IN THE LUST ROAD RIGHT OF WAY SUBJECT TO CITY REVIEW & APPROVAL.

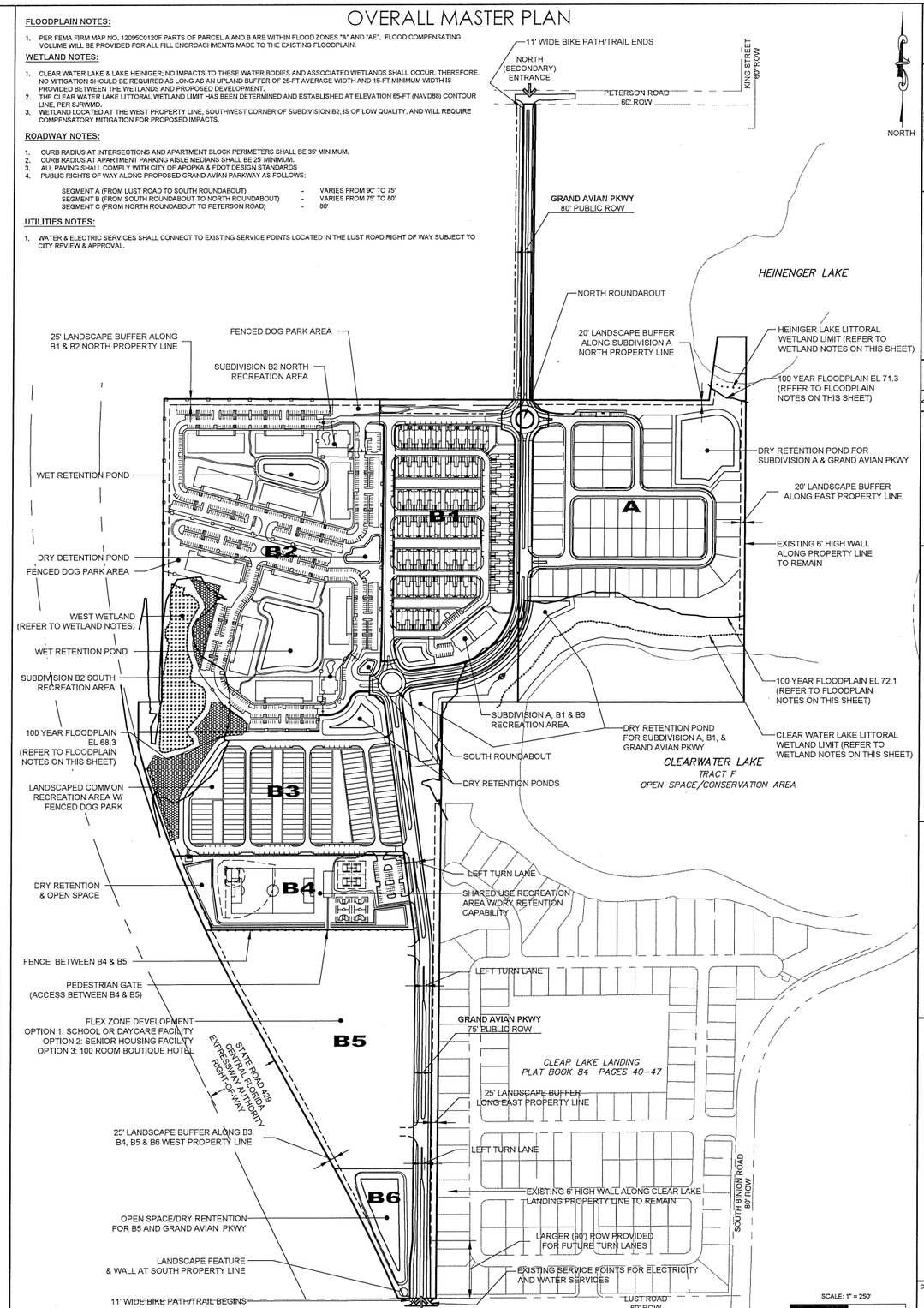

MASTER PLAN IS SUBJECT TO PRELIMINARY OR FINAL DEVELOPMENT PLAN APPROVAL

JOB #: 16058.20
PRJ. MGR: EGL
DESIGNER: EGL
CHECKED: JM

ENGINEER
EDUARDO GARCIA-LUNA, P.E.
FL LIC. #76002

DATE: Jul. 25, 2018

NO.	DATE	REVISIONS
1	07/25/18	CITY OF APOPKA PUD MASTER REVIEW #3
2	07/05/18	CITY OF APOPKA PUD MASTER REVIEW #2
3	06/05/18	CITY OF APOPKA PUD MASTER REVIEW #1

RECORD DRAWING

THIS PLAN WAS PREPARED BASED ON THE CLIENT'S OR LIMITED PERMISSIONED BASIS ON THE CLIENT'S PROPERTY AND ANY INFORMATION PROVIDED OR FURNISHED REGARDED AND RESULTING CHANGES MADE DURING CONSTRUCTION AS REPORTED BY WITNESSED UTILITY TESTING OF REPAIRS WERE INCORPORATED INTO THIS PLAN. HOWEVER, THE ACCURACY CAN NOT BE GUARANTEED. THE INFORMATION HERE IS BELIEVED TO BE CORRECT TO THE BEST OF INSHIER KNOWLEDGE.

ENGINEER:
FL LIC. #

AVIAN POINTE

PUD MASTER PLAN AMENDMENT
(MIXED USE MASTER PLAN)

2771 LUST ROAD
APOPKA, FLORIDA

APOPKA CLEAR LAKE INVESTMENTS, LLC

DEVELOPMENT SUMMARY & OVERALL MASTER PLAN

LOCHRANE
861 SOUTH ROBERT AVENUE | DELAND, FL 32803
PH: (407) 585-1117 | FAX: (407) 584-0107
WWW.LOCHRANE.COM
CERTIFICATE OF AUTHORIZATION # 6988
Consulting Engineers - Surveyors
An NV5 Company

DRAWING NO. ZA.02

SHEET 3 OF 15

O:\16058.20\CONST\PUD - MASTER PLAN\03 - AVIAN POINTE PUD - ZA.02.dwg - Jul 25, 2018 - 2:48pm

CITY OF APOPKA
PLANNING COMMISSION

X	PUBLIC HEARING	MEETING OF:	April 9, 2019
	SITE PLAN	FROM:	Community Development
	SPECIAL REPORTS	EXHIBITS:	Vicinity Map
X	OTHER: Plat		Aerial Map
			Centerpoint Retail Apopka Plat

SUBJECT: **CENTERPOINT RETAIL APOPKA - PLAT**

REQUEST: **RECOMMEND APPROVAL OF THE PLAT FOR THE CENTERPOINT RETAIL APOPKA**

SUMMARY:

OWNER:	RDP 9, LLC c/o Robert T. Gierke, Manager
APPLICANT:	Rogers Engineering, LLC c/o Rodney K Rogers, PSM
LOCATION:	1120 West Orange Blossom Trail
PARCEL ID NUMBER:	05-21-28-0000-00-025
EXISTING USE:	Vacant
FLUM DESIGNATION:	Commercial
ZONING:	C-R (Regional Commercial)
PROPOSED DEVELOPMENTS:	2 lot plat with cross access easements 6,815 square feet of retail store and 4,500 square feet of restaurant
TRACT SIZE:	3.32 +/- acres
LAND DEVELOPMENT CODE:	1993 Land Development Code

DISTRIBUTION

Mayor Nelson	Finance Director	Public Services Director
Commissioners	HR Director	Recreation Director
City Administrator	IT Director	City Clerk
Community Development Director	Police Chief	Fire Chief

RELATIONSHIP TO ADJACENT PROPERTIES:

Direction	***Future Land Use***	***Zoning***	***Present Use***
North (City)	Commercial	PUD (Commercial)	Automobile Service Station and Multi-tenant Center
East (City)	Commercial	C-1 (Retail Commercial)	Retention Pond
South (County and City)	Residential	County Ind-4 (Heavy Industrial District) and City R-1 (Residential Single-Family District)	Railroad and Single Family Residential Subdivision
West (City)	Commercial	C-2 (General Commercial District)	Retail Sales

PROJECT SUMMARY: This is a request to approve the Centerpoint Retail Apopka Plat, which proposes the division of one parcel into two separate lots, one lot for the IHOP Restaurant and one lot for the AutoZone Store. The final development plans for the IHOP Restaurant and AutoZone Store were approved on September 5, 2018. These site plans were prepared with consideration to a future creation of lots for each building.

ACCESS/TRANSPORTATION: Each lot will have access to U.S. 441 via a cross-access easement through the Verizon Store to Lake Doe Boulevard. Two other access points will be available through cross-access easement across the IHOP property.

AutoZone and IHOP will share all access lanes, and cross assess easements are provided within the plat. At the time of final development plan submittals, one transportation impact analysis (TIA) was submitted to evaluate the combined impacts of AutoZone and IHOP on the surrounding roadway segments and intersections. Included in the analysis were segments of U.S 441/W Orange Blossom Trail, Errol Parkway, Lake Doe Boulevard, and Old Dixie Highway. Intersections analyzed were U.S. 441/W Orange Blossom Trail and Vick Road; U.S. 441/W Orange Blossom Trail and Errol Parkway; Old Dixie Highway and Errol Parkway; Old Dixie Highway and Vick Road; Lake Doe Boulevard site entrance; and U.S. 441/W Orange Blossom Trail site entrances.

The projects will generate 503 daily and 44 P.M. Peak Hour Net New trips. The addition of these project trips to the study roadways and intersections will not cause the Level of Service (LOS) to fall below the City's adopted LOS standard.

Right and left turn warrant analyses were conducted for the site entrances on U.S. 441 and concluded that turn lanes are not needed to safely accommodate project traffic. Both access driveways on U.S. 441/W Orange Blossom Trail are required for the site at the time of development of either project if they are not developed simultaneously.

STORMWATER: The stormwater management system includes on-site retention areas, on the southern portion of the AutoZone Store and eastern area of the IHOP Restaurant project sites. The stormwater pond designs meet the City's Land Development Code requirements.

CONDITION OF APPROVAL: All access driveways must be constructed and all associated cross access easements must be recorded across both the IHOP and AutoZone sites prior to issuance of a

certificate of occupancy on either site.

PUBLIC HEARING SCHEDULE:

April 9, 2019 - Planning Commission (5:30 pm)
April 17, 2019 - City Council (7:00 pm)

RECOMMENDATION ACTION:

The **Development Review Committee** recommends approval of the Centerpoint Retail Apopka Plat, finding it consistent with the approved IHOP Restaurant and AutoZone Store Final Development Plans.

Recommended Motion: Find the Centerpoint Retail Apopka – Plat consistent with the Land Development Code and approved final development plans, and recommend approval of the Plat, subject to the IHOP Restaurant and AutoZone Store Final Development Plans and findings of this staff report.

Planning Commission role: The role of the Planning Commission for this development application is to advise the City Council to approve or deny the Plat based on consistency with the Comprehensive Plan and Land Development Code, and the approved IHOP Restaurant and AutoZone Store Final Development Plans.

Project Name:	**Centerpoint Retail Apopka Plat**
Owner:	**RDP 9, LLC c/o Robert T. Gierke, Manager**
Engineer:	**Rogers Engineering, LLC c/o Rodney K. Rogers, PSM**
Parcel I.D. No(s):	**05-21-28-0000-00-025**
Address():	**1120 West Orange Blossom Trail**
Total Acres:	**3.32 +/- Acre(s)**

VICINITY MAP

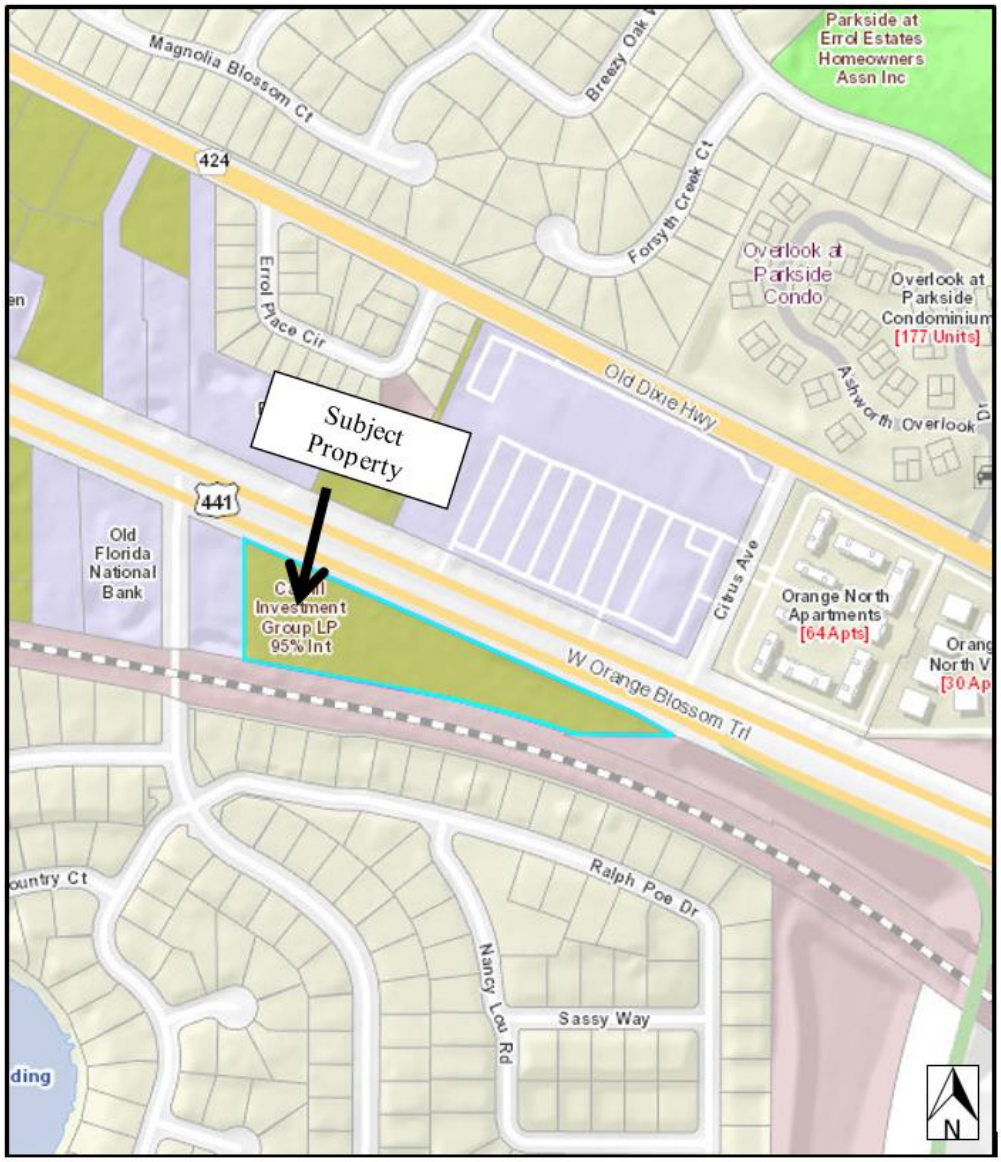

AERIAL MAP

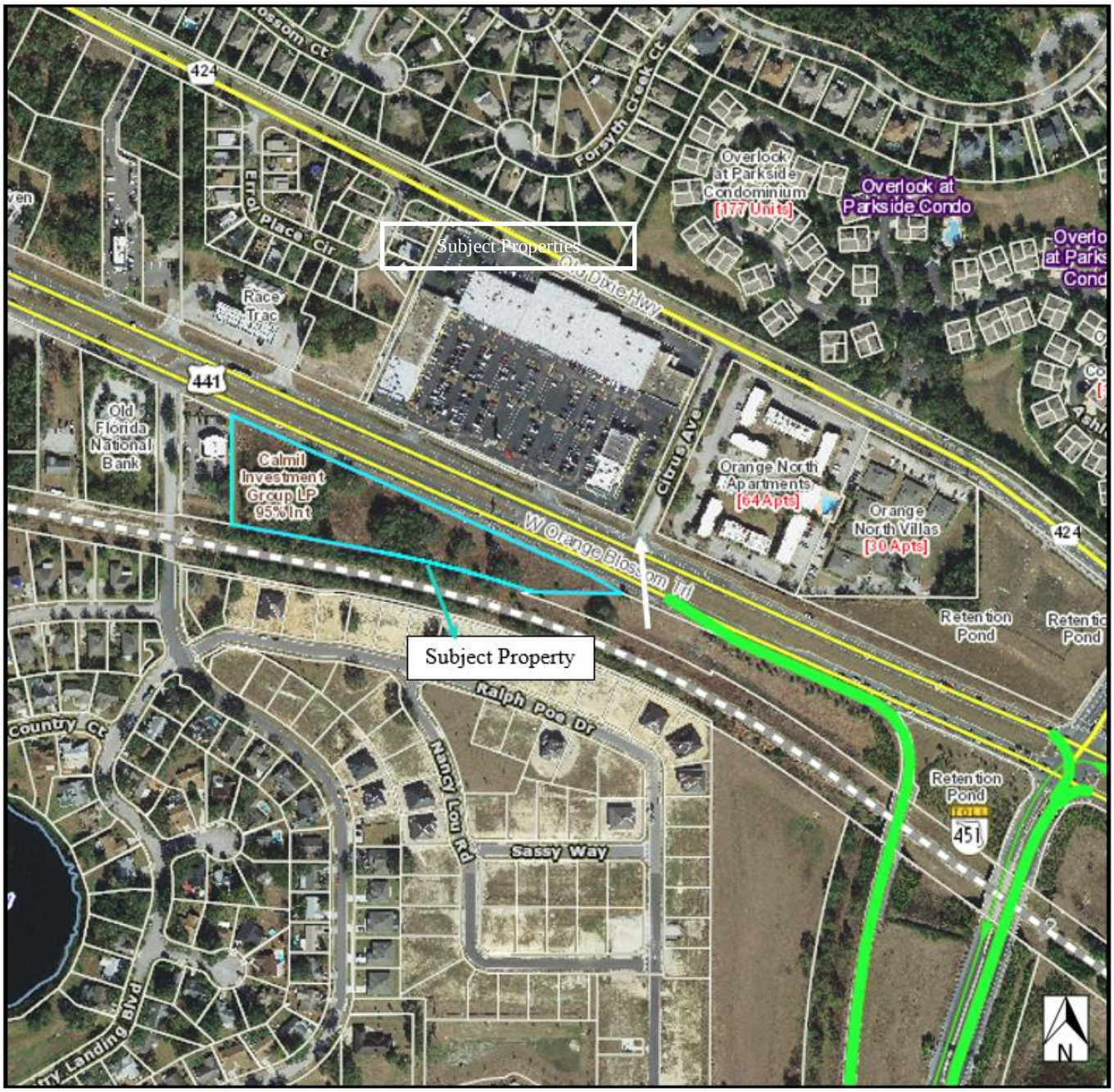
424
Forsyth Creek Ct
Errol Place Cir
Subject Properties
Overlook at Parkside Condominium [177 Units]
Overlook at Parkside Condo
Race Trac
441
Old Florida National Bank
Calmil Investment Group LP 95% Int
Citrus Ave
Orange North Apartments [64 Apts]
Orange North Villas [30 Apts]
W Orange Blossom Trl
Retention Pond
Subject Property
Ralph Poe Dr
Nancy Lou Rd
Sassy Way
Retention Pond
451
N

CENTERPOINT RETAIL APOPKA

SECTION 5, TOWNSHIP 21 SOUTH, RANGE 28 EAST
CITY OF APOPKA ORANGE COUNTY, FLORIDA

LEGAL DESCRIPTION

THE S.W. 1/4 OF THE S.E. 1/4 OF SECTION 5, TOWNSHIP 21 SOUTH, RANGE 28 EAST, CITY OF APOPKA, ORANGE COUNTY, FLORIDA, LYING SOUTH OF U.S. HIGHWAY NO. 441 AND NORTH OF THE SEABOARD COASTLINE RAILROAD RIGHT-OF-WAY, LESS AND EXCEPT THE WEST 127.94 FEET THEREOF, AND BEING MORE PARTICULARLY DESCRIBED AS FOLLOWS:

BEGIN AT THE INTERSECTION OF THE SOUTH RIGHT-OF-WAY LINE OF U.S. HIGHWAY 441 (163 FEET WIDE) WITH THE SOUTH BOUNDARY OF THE S.E. 1/4 OF SAID SECTION 5; THENCE DEPARTING SAID SOUTH BOUNDARY OF THE S.E. 1/4, PROCEED N65°08'03"W ALONG SAID SOUTH RIGHT-OF-WAY LINE, 1080.70 FEET; THENCE DEPARTING SAID RIGHT-OF-WAY LINE, PROCEED S00°54'42"W, 267.56 FEET TO A POINT ON THE NORTHERLY RIGHT-OF-WAY LINE OF THE SEABOARD COASTLINE RAILROAD (120 FEET WIDE); THENCE S78°27'33"E ALONG SAID RIGHT-OF-WAY LINE, 340.25 FEET TO THE POINT OF CURVATURE OF A CURVE CONCAVE SOUTHWESTERLY, HAVING A RADIUS OF 3286.85 FEET AND A CENTRAL ANGLE OF 07°25'08"; THENCE SOUTHEASTERLY ALONG THE ARC OF SAID CURVE AND ALONG SAID RIGHT-OF-WAY LINE, A DISTANCE OF 425.60 FEET (CHORD BEARING & DISTANCE OF S74°44'58"E, 425.30 FEET) TO THE INTERSECTION WITH THE AFOREMENTIONED SOUTH BOUNDARY OF THE S.E. 1/4 OF SECTION 5; THENCE DEPARTING SAID RIGHT-OF-WAY LINE, PROCEED S88°20'46"E ALONG SAID SOUTH BOUNDARY, A DISTANCE OF 241.18 FEET TO THE POINT OF BEGINNING.

DEVELOPER'S ACKNOWLEDGMENT AND DEDICATION

KNOW ALL MEN BY THESE PRESENTS, THAT RDP 9, LLC, BEING THE OWNER IN FEE SIMPLE OF THE LANDS SHOWN AND DESCRIBED HEREON, HAS CAUSED TO BE MADE THIS PLAT OF CENTERPOINT RETAIL APOPKA FOR THE USES AND PURPOSES THEREIN EXPRESSED; AND THAT UTILITY EASEMENT 'A' IS HEREBY GRANTED TO THE CITY OF APOPKA FOR THE OWNERSHIP, OPERATION AND MAINTENANCE OF A POTABLE WATER MAIN AND A REUSE WATER MAIN; AND THAT ACCESS EASEMENT 'E' IS HEREBY GRANTED TO THE OWNERS OF LOTS 1 AND 2 OF THIS PLAT AND THE OWNER OF THE LANDS ADJOINING LOT 1 ON ITS WEST SIDE, FOR INGRESS & EGRESS BY PEDESTRIANS AND VEHICLES.

IN WITNESS WHEREOF HAS CAUSED THESE PRESENTS TO BE SIGNED BY THE OFFICER NAMED BELOW ON THIS _____ DAY OF _____, 2019.

WITNESSES:

SIGNATURE:_____
PRINT NAME:_____
SIGNATURE:_____
PRINT NAME:_____

LANDLORD

RDP 9, LLC, a Florida limited liability company

BY: RDP Investment Holdings, LLC, a Florida limited liability company, Managing Member

BY: Retail Development Properties, LLC, a Florida limited liability company, Managing Member

BY: _____
ROBERT T. GIERKE
Its: MANAGER

NOTARY ACKNOWLEDGMENT:

STATE OF FLORIDA
COUNTY OF ORANGE

THE FOREGOING INSTRUMENT WAS ACKNOWLEDGED BEFORE ME THIS _____ DAY OF _____, 2019 BY ROBERT T. GIERKE AS MANAGER OF RETAIL DEVELOPMENT PROPERTIES, LLC, A FLORIDA LIMITED LIABILITY COMPANY, THE MANAGING MEMBER OF RDP INVESTMENT HOLDINGS, LLC, A FLORIDA LIMITED LIABILITY COMPANY, AS MANAGING MEMBER OF RDP 9, LLC, A FLORIDA LIMITED LIABILITY COMPANY ON BEHALF OF THE COMPANIES. HE IS PERSONALLY KNOWN TO ME OR HAS PRODUCED _____(TYPE OF IDENTIFICATION) AS IDENTIFICATION.

(SEAL BELOW)

_____
NOTARY PUBLIC, STATE OF FLORIDA

PRINTED NAME:_____
COMMISSION EXPIRES:_____

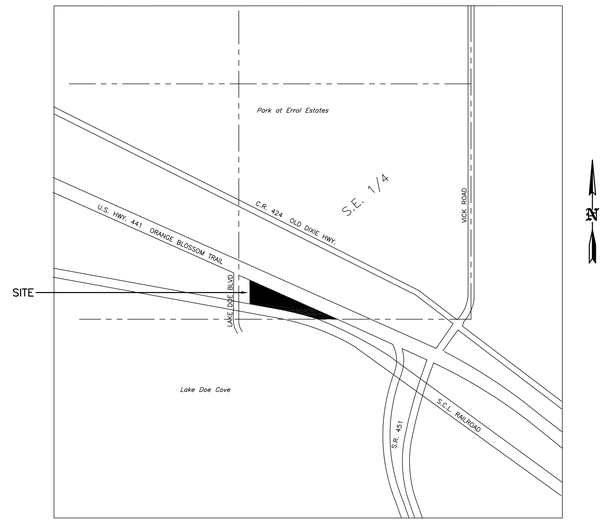

VICINITY MAP
NOT TO SCALE

GENERAL NOTES:

1. THIS 3.32 ACRES SUBDIVISION CONTAINS 2 COMMERCIAL LOTS AND NO PROPOSED ROADWAYS.

2. THIS PLAT IS BASED ON AN ALTA/NSPS LAND TITLE SURVEY OF THESE SAME LANDS FOR RDP 9, LLC., PREPARED BY ROGERS ENGINEERING, LLC, DATED 9-20-2018.

3. BEARINGS ARE BASED ON ASSUMED DATUM: MORE PARTICULARLY THE SOUTH BOUNDARY OF THE S.E. 1/4 OF SECTION 5 AS BEING S88°20'46"E.

4. THE LEGAL DESCRIPTION SHOWN HEREON AND MATTERS OF TITLE AFFECTING THIS PLAT WERE FURNISHED BY THE PLAT PROPERTY INFORMATION REPORT PREPARED BY FIDELITY NATIONAL TITLE INSURANCE COMPANY, DATED FEB. 26, 2019.

5. LOTS 1 AND 2 ARE SUBJECT TO AND THE BENEFICIARY OF THE ACCESS & UTILITY EASEMENT AGREEMENT RECORDED IN O.R. BOOK 10801, PAGE 4104, PUBLIC RECORDS OF ORANGE COUNTY, FLORIDA.

6. LOTS 1 AND 2 ARE SUBJECT TO BLANKET TYPE OIL AND GAS RESERVATIONS AS SET FORTH IN DEED BOOK 821, PAGE 213, O.R. BOOK 239, PAGE 160 AND O.R. BOOK 1600, PAGE 958, PUBLIC RECORDS OF ORANGE COUNTY, FLORIDA.

7. LOTS 1 AND 2 ARE SUBJECT TO THE PROVISIONS CONTAINED IN THE DECLARATION OF COVENANTS, CONDITIONS, RESTRICTIONS AND EASEMENTS AS DECLARED BY RDP 9, LLC IN O.R. BOOK _____, PAGE _____, PUBLIC RECORDS OF ORANGE COUNTY, FLORIDA, THESE PROVISIONS INCLUDE EASEMENT 'B', EASEMENT 'C' AND EASEMENT 'D' AS SHOWN ON THIS PLAT.

8. THIS PROPERTY IS LOCATED IN A ZONE "X" (AREA OUTSIDE THE 1-PERCENT ANNUAL CHANCE FLOODPLAIN) ACCORDING TO THE FEMA FLOOD INSURANCE RATE MAP COMMUNITY NUMBER 120180, PANEL 0120, SUFFIX F, EFFECTIVE DATE: SEPTEMBER 25, 2009.

9. BUILDING SETBACK RESTRICTIONS SHALL BE IN COMPLIANCE WITH THE CITY OF APOPKA REGULATIONS FOR C-2 ZONING CLASSIFICATION AND THE SETBACK RESTRICTION ALONG U.S. HIGHWAY NO. 441 ESTABLISHED BY THIS PLAT.

NOTICE

THIS PLAT, AS RECORDED IN ITS GRAPHIC FORM, IS THE OFFICIAL DEPICTION OF THE SUBDIVIDED LANDS DESCRIBED HEREIN AND WILL IN NO CIRCUMSTANCES BE SUPPLANTED IN AUTHORITY BY ANY OTHER GRAPHIC OR DIGITAL FORM OF THE PLAT. THERE MAY BE ADDITIONAL RESTRICTIONS THAT ARE NOT RECORDED ON THIS PLAT THAT MAY BE FOUND IN THE PUBLIC RECORDS OF THIS COUNTY.

CERTIFICATE OF SURVEYOR:

KNOW ALL MEN BY THESE PRESENTS, THAT THE UNDERSIGNED, BEING A LICENSED PROFESSIONAL SURVEYOR AND MAPPER IN THE STATE OF FLORIDA, DOES HEREBY CERTIFY THAT ON SEPTEMBER 20, 2018, HE COMPLETED THE SURVEY OF SAID LANDS SHOWN ON THE FOREGOING PLAT AND SAID SURVEY WAS MADE UNDER HIS RESPONSIBLE DIRECTION AND THAT THE PERMANENT REFERENCE MONUMENTS WERE IN PLACE ON THE 28th DAY OF FEBRUARY, 2019; AND THAT THIS PLAT COMPLIES WITH THE REQUIREMENTS OF FLORIDA STATUTES CHAPTER 177 AND CHAPTER 12.02.06 OF THE CODE OF ORDINANCES OF THE CITY OF APOPKA, FLORIDA, AND THAT SAID LANDS ARE LOCATED IN THE CITY OF APOPKA, FLORIDA..

DATE:_____

_____
RODNEY K. ROGERS
PROFESSIONAL SURVEYOR AND MAPPER
FLORIDA REGISTRATION NO. 5274

CERTIFICATE OF APPROVAL BY MUNICIPALITY:

THIS IS TO CERTIFY THAT ON THE ____ DAY OF _____, 2019 THE CITY COUNCIL OF APOPKA APPROVED THE FOREGOING PLAT.

BY:_____
BRYAN NELSON
MAYOR

DATE:_____

CERTIFICATE OF APPROVAL BY CITY ENGINEER:

EXAMINED AND APPROVED ON THE ___ DAY OF _____, 2019.

BY:_____
RICHARD W. EARP, P.E.
CITY ENGINEER

CERTIFICATE OF APPROVAL BY THE DEVELOPMENT REVIEW BOARD:

THIS IS TO CERTIFY THAT ON THE ___ DAY OF _____, 2019 THE FOREGOING PLAT WAS APPROVED BY THE APOPKA LAND DEVELOPMENT REVIEW COMMITTEE.

BY:_____
JAMES GREEN
CHAIRMAN

CERTIFICATE OF REVIEW CITY SURVEYOR:

PURSUANT TO SECTION 177.081, FLORIDA STATUTES, I HAVE REVIEWED THIS PLAT FOR CONFORMITY TO CHAPTER 177, PART 1, FLORIDA STATUTES, AND THAT SAID PLAT COMPLIES WITH THE TECHNICAL REQUIREMENTS OF THAT CHAPTER, PROVIDED HOWEVER THAT MY REVIEW DOES NOT INCLUDE FIELD VERIFICATION OF ANY OF THE COORDINATES, POINTS OR MEASUREMENTS SHOWN ON THE PLAT.

SIGNATURE:_____ DATE:_____
NAME:_____
REG. NO.:_____

CERTIFICATE OF COUNTY COMPTROLLER:

I HEREBY CERTIFY THE FOREGOING PLAT WAS RECORDED IN THE ORANGE COUNTY OFFICIAL RECORDS ON THE _____ DAY OF _____, 2019 AS FILE NO:_____.

PHIL DIAMOND, COUNTY COMPTROLLER IN AND FOR ORANGE COUNTY, FLORIDA
BY:_____

PREPARED BY:
ROGERS ENGINEERING, LLC
Civil Engineering & Land Surveying
1105 S.E. 3rd Avenue • Ocala, Florida 34471 • Ph. (352) 622-9214 • Lic. Bus. #4074

CENTERPOINT RETAIL APOPKA

SECTION 5, TOWNSHIP 21 SOUTH, RANGE 28 EAST
CITY OF APOPKA ORANGE COUNTY, FLORIDA

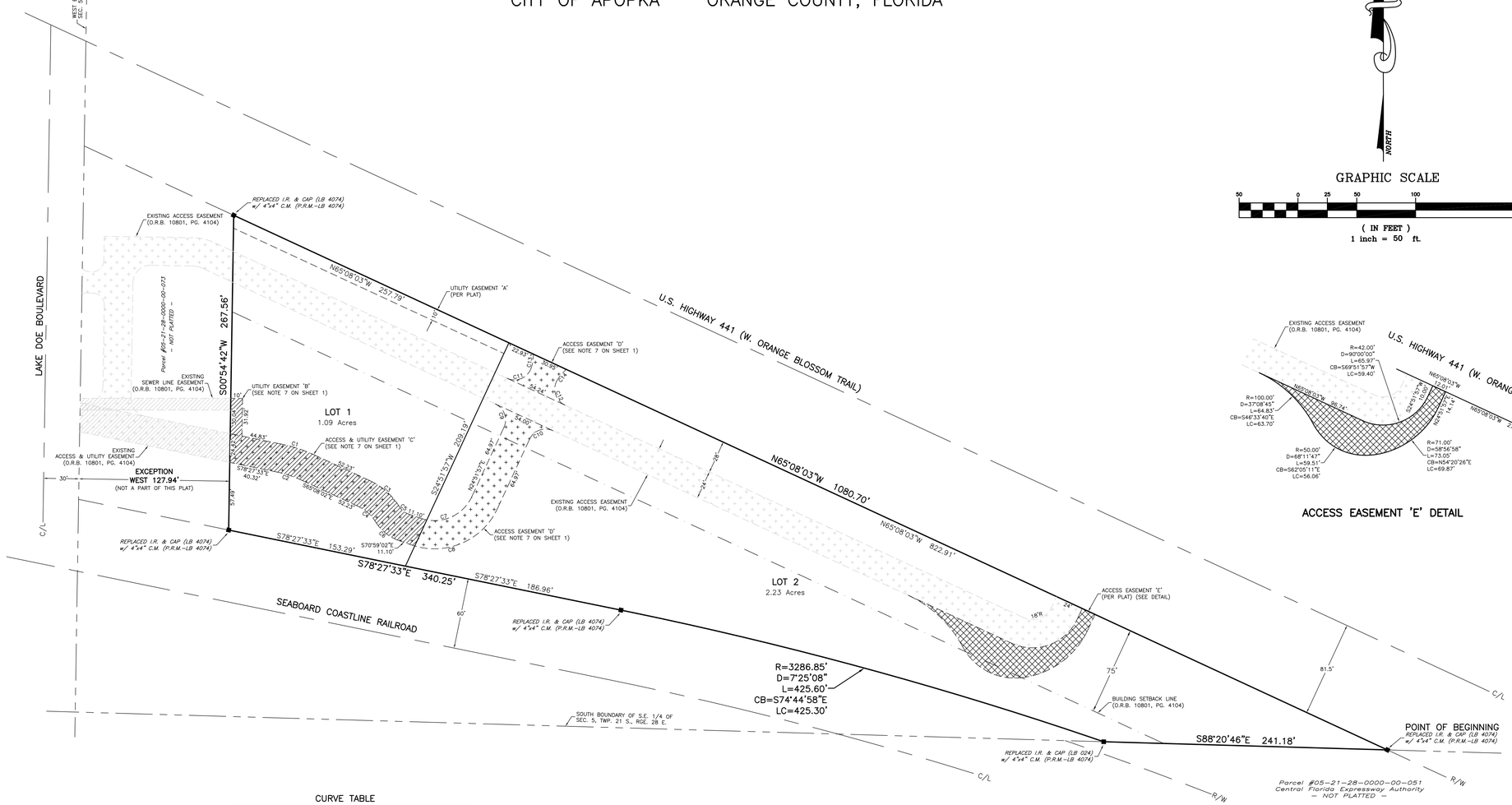

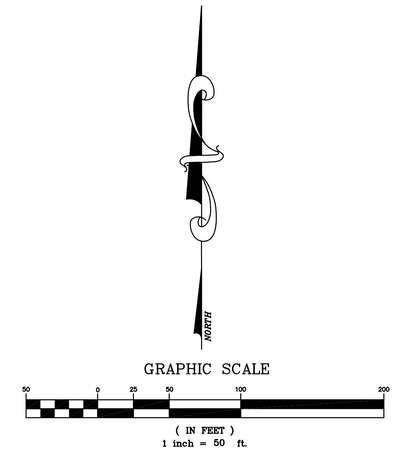

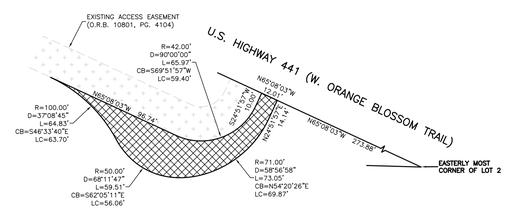

ACCESS EASEMENT 'E' DETAIL

CURVE TABLE

CURVE NUMBER	CENTRAL ANGLE	RADIUS	ARC LENGTH	CHORD BEARING	CHORD DISTANCE
1	13°19'30"	124.00'	28.84'	S71°47'47"E	28.77'
2	13°19'30"	100.00'	23.26'	S71°47'47"E	23.20'
3	33°05'15"	59.00'	34.07'	S48°35'25"E	33.60'
4	33°05'15"	35.00'	20.21'	S48°35'25"E	19.93'
5	38°56'38"	15.00'	10.20'	S51°31'06"E	10.00'
6	38°56'38"	39.00'	26.51'	S51°31'06"E	26.00'
7	84°08'37"	35.00'	51.40'	N66°56'16"E	46.90'
8	84°08'37"	59.00'	86.65'	N66°56'16"E	79.07'
9	90°00'00"	15.00'	23.56'	N20°08'02"W	21.21'
10	90°00'00"	15.00'	23.56'	N69°51'58"W	21.21'
11	96°16'42"	15.00'	25.21'	N66°43'26"E	22.34'
12	96°22'25"	15.00'	25.23'	N16°56'50"W	22.36'
13	19°26'14"	35.00'	11.87'	N08°51'58"E	11.82'
14	19°24'11"	35.00'	11.85'	N40°56'28"E	11.80'

LEGEND

C.M.	CONCRETE MONUMENT
I.R.	IRON ROD
R/W	RIGHT OF WAY
E/P	EDGE OF PAVEMENT
C/L	CENTERLINE
D or Δ	CENTRAL ANGLE
R	RADIUS
L	ARC LENGTH
LC	LENGTH OF CHORD
CB	CHORD BEARING
SEC.	SECTION
TWP.	TOWNSHIP
RGE.	RANGE
O.R.B.	OFFICIAL RECORDS BOOK
PG.	PAGE
C2	CURVE NUMBER (SEE TABLE)

PREPARED BY:

ROGERS ENGINEERING, LLC
Civil Engineering & Land Surveying
1105 S.E. 3rd Avenue • Ocala, Florida 34471 • Ph. (352) 622-9214 • Lic. Bus. #4074