# APOPKA PLANNING COMMISSION AGENDA
**OCTOBER 08, 2019 5:30 PM**
**APOPKA CITY HALL COUNCIL CHAMBERS**

**CALL TO ORDER**

**OPENING AND INVOCATION**

**APPROVAL OF MINUTES**

1. Approve minutes of the Planning Commission meeting held September 10, 2019

**PUBLIC COMMENT PERIOD**

The Public Comment Period is for City-related issues that may or may not be on today's Agenda. If you are here for a matter that requires a public hearing, please wait for that item to come up on the agenda. If you wish to address the Council, you must fill out an Intent to Speak form and provide it to the City Clerk prior to the start of the meeting. If you wish to speak during the Public Comment Period, please fill out a green-colored Intent-to-Speak form. If you wish to speak on a matter that requires a public hearing, please fill out a white-colored Intent-to-Speak form. Speaker forms may be completed up to 48 hours in advance of the Council meeting. Each speaker will have four minutes to give remarks, regardless of the number of items addressed. Please refer to Resolution No. 2016-16 for further information regarding our Public Participation Policy & Procedures for addressing the City Council.

**LEGISLATIVE**

**Public Hearing**

**Site Plans**

1. Final Development Plan – Auto Base Holdings (Lake Gem Lot 3)
   Project: Property Industrial Enterprises, LLC c/o Michael R. Cooper
   Location: 601 Marshall Lake Road
   Project Manager: Jean Sanchez

2. Final Development Plan – Central Florida Preparatory School
   Project: Emerson Point Association, LLLP, c/o Michael Wright
   Location: 1800 Marden Road
   Project Manager: Jean Sanchez

3. Major Development Plan – Hamrick Estates
   Project: Wekiva Pointe, LLC, c/o Annette L. Peck Trust
   Location: 3220 Pittman Road
   Project Manager: Bobby Howell

**QUASI-JUDICIAL: None**

**OLD BUSINESS**

**NEW BUSINESS**

**ADJOURNMENT**

Individuals with disabilities needing assistance to participate in any of these proceedings should contact the City Clerk at least two (2) working days in advance of the meeting date and time at (407) 703-1704. F.S. 286.0105 If a person decides to appeal any decision or recommendation made by Planning Commission with respect to any matter considered at this meeting, he will need record of the proceedings, and that for such purposes he may need to ensure that a verbatim record of the proceedings is made, which record includes the testimony and evidence upon which the appeal is to be based.

Any opening invocation that is offered before the official start of the Planning Commission meeting shall be the voluntary offering of a private person, to and for the benefit of the Planning Commission. The views or beliefs expressed by the invocation speaker have not been previously reviewed or approved by the Planning Commission or the city staff, and the City is not allowed by law to endorse the religious or non-religious beliefs or views of such speaker. Persons in attendance at the Planning Commission meeting are invited to stand during the opening ceremony. However, such invitation shall not be construed as a demand, order, or any other type of command. No person in attendance at the meeting shall be required to participate in any opening invocation that is offered or to participate in the Pledge of Allegiance. You may remain seated within the City Council Chambers or exit the City Council Chambers and return upon completion of the opening invocation and/or Pledge of Allegiance if you do not wish to participate in or witness the opening invocation and/or the recitation of the Pledge of Allegiance.

**MINUTES OF THE PLANNING COMMISSION REGULAR MEETING HELD ON AUGUST 13, 2019, AT 5:30 P.M. IN THE CITY COUNCIL CHAMBERS, APOPKA, FLORIDA.**

**MEMBERS PRESENT:** Linda Laurendeau, William Gusler, Mary Norwood, Robert Ryan, and Butch Stanley

**ABSENT:** James Greene; Orange County Public Schools (Non-voting)

**STAFF PRESENT:** Joseph Byrd – City Attorney, James Hitt, FRA-RA – Community Development Director, Bobby Howell, AICP – Senior Planner, Jean Sanchez – Planner II, and Jeanne Green – Recording Secretary.

**OTHERS PRESENT:** Howard Washington, Bibi Singl, Michael Cooper, Ramtit Robin, and Teresa Sargeant

**OPENING AND INVOCATION:** Vice-Chairperson Laurendeau called the meeting to order and asked for a moment of silent prayer. The Pledge of Allegiance followed.

**APPROVAL OF MINUTES:** Vice-Chairperson Laurendeau asked if there were any corrections or additions to the regular meeting minutes of August 13, 2019, at 5:30 p.m.

**Motion:** **William Gusler made a motion to approve the Planning Commission minutes from the regular meeting held on August 13, 2019, at 5:30 p.m. and seconded by Butch Stanley. Aye votes were cast by Linda Laurendeau, William Gusler, Mary Norwood, Robert Ryan, and Butch Stanley (5-0)**

**PUBLIC COMMENT**: Vice-Chairperson Laurendeau opened the meeting to Public Comment. No one spoke.

**LEGISLATIVE - COMPREHENSIVE PLAN – SMALL SCALE – FUTURE LAND USE AMENDMENT – RAMJIT BHOODRAM LIFE ESTATE; RAMJIT ETHEL R LIFE ESTATE; REM: RAMJIT FAMILY TRUST** - Vice-Chairperson Laurendeau stated this is a request to find the proposed Small-Scale Future Land Use Amendment consistent with the Comprehensive Plan and compatible with the character of the surrounding areas, and recommend approval of the change of Future Land Use Designation from "County" Rural to "City" Low Density Residential, subject to the findings of the staff report for the property owned by the Ramjit Bhoodram Life Estate; Ramjit Ethel R Life Estate; Rem: Ramjit Family Trust and located at 2378 Marden Road.

Staff Presentation: Bobby Howell, AICP, Senior Planner, stated this is a request to find the proposed Small-Scale Future Land Use Amendment consistent with the Comprehensive Plan and compatible with the character of the surrounding areas, and recommend approval of the change of Future Land Use Designation from "County" Rural to "City" Low Density Residential, subject to the findings of the staff report for the property owned by the Ramjit Bhoodram Life Estate; Ramjit Ethel R Life Estate; Rem: Ramjit Family Trust and located at 2378 Marden Road. The existing use is a single-family home and the proposed use is to subdivide the property into three lots for three single family homes. The current zoning is Transitional (T) and the proposed change of zoning is "City" RSF-1B (Residential Single-Family District). The maximum allowable development is five (5) dwelling units per acre for a total of 25 dwelling units. The tract size is 5.0 +/- acres.

The subject parcel was annexed in the City on January 16, 2019 via Ordinance No. 2707. Presently, the subject parcel does not have a City future land use designation or a City zoning classification assigned. The applicant is requesting a Small-Scale Future Land Use Amendment to change the future land use designation from "County" Rural to "City" Low Density Residential to facilitate the development of a three (3) lot residential development on the property. A rezoning request to RSF-1B (Residential Single-Family District) is currently being processed and will be presented for City Council consideration.

Site development cannot exceed the intensity allowed by the Future Land Use policies. Planning & Zoning staff has determined that the following policies support a Low Density Residential future land use designation at the subject site:

*Future Land Use Element* - Policy 3.1.e, Low Density Residential - "The primary use shall be residential dwelling units up to 5 dwelling units per acre, elementary schools; middle schools, high schools; supporting infrastructure of less than two acres, neighborhood parks."

The proposed future land use change will result in an insignificant increase (less than 9) in the number of residential units which could be developed at the subject property, particularly as the property owner proposes a three-lot residential subdivision. If more than nine residential homes should be proposed in the future, a school capacity enhancement agreement from OCPS will be necessary prior to approval of a development application. Therefore, based on proposed development of nine or fewer homes, the property is exempt from school capacity enhancement per the School Interlocal Planning Agreement. School concurrency may apply at the time of the final development plan/plat application.

The JPA requires the City to notify the County 30 days before any public hearing or advisory board. The City properly notified Orange County on July 10, 2019.

The Development Review Committee found the proposed Small-Scale Future Land Use Amendment from "County" Rural to "City" Low Density Residential consistent with the Comprehensive Plan and compatible with the character of the surrounding area, and recommends approval of the proposed Future Land Use Designation of Low Density Residential for the property owned by Ramjit Bhoodram Life Estate; Ramjit Ethel R Life Estate, located at 2378 Marden Road.

Staff recommended the Planning Commission find the proposed Small-Scale Future Land Use Amendment consistent with the Comprehensive Plan and compatible with the character of the surrounding areas, and recommend approval of the change of Future Land Use Designation from "County" Rural to "City" Low Density Residential, subject to the findings of the Staff Report.

This item is considered legislative and establishes general policy. The staff report and its findings are to be incorporated into and made a part of the minutes of this meeting.

Vice-Chairperson Laurendeau opened the meeting for public hearing. With no one wishing to speak, Vice-Chairperson Laurendeau closed the public hearing.

**Motion:** **Mary Norwood made a motion to find the proposed Small-Scale Future Land Use Amendment consistent with the Comprehensive Plan and compatible with the character of the surrounding areas, and recommend approval of the change of Future Land Use Designation from "County" Rural to "City" Low Density Residential, subject to the findings of the staff report for the property owned by the Ramjit Bhoodram Life Estate; Ramjit Ethel R Life Estate; Rem: Ramjit Family Trust and located at 2378 Marden Road. Motion seconded by Butch Stanley. Aye votes were cast by Linda Laurendeau, William Gusler, Mary Norwood, Robert Ryan and Butch Stanley (5-0).**

**LEGISLATIVE – CHANGE OF ZONING – RAMJIT BHOODRAM LIFE ESTATE; RAMJIT ETHEL R LIFE ESTATE; REM: RAMJIT FAMILY TRUST** - Vice-Chairperson Laurendeau stated this is a request to find the proposed amendment consistent and compatible with the character of the surrounding areas; and recommend approval of the proposed Change of Zoning from Transitional (T) to RSF-1B subject to the findings in the staff report for the property owned by Ramjit Bhoodram Life Estate; Ramjit Ethel R Life Estate; Rem: Ramjit Family Trust and located at 2378 Marden Road.

Staff Presentation: Mr. Howell stated this is a request to find the proposed amendment consistent and compatible with the character of the surrounding areas; and recommend approval of the proposed Change of Zoning from Transitional (T) to RSF-1B subject to the findings in the staff report for the property owned by Ramjit Bhoodram Life Estate; Ramjit Ethel R Life Estate; Rem: Ramjit Family Trust and located at 2378 Marden Road. The existing use is a single-family home and the proposed use is to subdivide the property into three lots for three single family homes. The current zoning is Transitional (T) and the proposed change of zoning is "City" RSF-1B (Residential Single-Family District). The maximum allowable development is five (5) dwelling units per acre for a total of 25 dwelling units. The tract size is 5.0 +/- acres.

The subject parcel was annexed into the City on January 16, 2019 via Ordinance No. 2707. The applicant is requesting "Low Density Residential" Future Land Use and RSF-1B zoning. The purpose of the RSF-1B: Residential Single-Family-Large Lot district is to provide lands that accommodate primarily single-family detached dwellings on lots with a minimum area of 8,000 square feet per dwelling unit. The applicant has indicated they intend to construct a three (3) lot residential development on the property at some time in the future. Development of the property will be required to adhere to the RSF-1B standards as noted in the Land Development Code.

The applicant is requesting a Low Density Residential future land use designation which allows five (5) dwelling units per acre. The Low Density Residential future land use designation is consistent with the proposed RSF-1B zoning designation. Site development cannot exceed the intensity allowed by the Future Land Use policies.

The subject parcel was annexed into the City on January 16, 2019 via Ordinance No. 2707. The applicant is requesting "Low Density Residential" Future Land Use and RSF-1B zoning. The purpose of the RSF-1B: Residential Single-Family-Large Lot district is to provide lands that accommodate primarily single-family detached dwellings on lots with a minimum area of 8,000 square feet per dwelling unit. The applicant has indicated they intend to construct a three (3) lot residential development on the property at some time in the future. Development of the property will be required to adhere to the RSF-1B standards as noted in the Land Development Code.

The applicant is requesting a Low Density Residential future land use designation which allows five (5) dwelling units per acre. The Low Density Residential future land use designation is consistent with the proposed RSF-1B zoning designation. Site development cannot exceed the intensity allowed by the Future Land Use policies.

The proposed future land use change will result in an insignificant increase (less than 9) in the number of residential units which could be developed at the subject property. The applicant proposes to subdivide the subject property into three lots. If more than nine lots are proposed in the future, the developer will be subject to school capacity enhancement. Therefore, the property is exempt from school capacity enhancement per the School Interlocal Planning Agreement. School concurrency may apply at the time of the final development plan/plat application.

The JPA requires the City to notify the County 30 days before any public hearing or advisory board. The City properly notified Orange County on July 10, 2019.

The proposed future land use change will result in an insignificant increase (less than 9) in the number of residential units which could be developed at the subject property. The applicant proposes to subdivide the subject property into three lots. If more than nine lots are proposed in the future, the developer will be subject to school capacity enhancement. Therefore, the property is exempt from school capacity enhancement per the School Interlocal Planning Agreement. School concurrency may apply at the time of the final development plan/plat application.

The JPA requires the City to notify the County 30 days before any public hearing or advisory board. The City properly notified Orange County on July 10, 2019.

The Development Review Committee finds the proposed amendment consistent and compatible with the character of the surrounding areas, and recommends approval of the proposed Change of Zoning from Transitional (T) to RSF-1B (Residential Single-Family) for the property located at 2378 Marden Road.

Staff recommended the Planning Commission find the proposed amendment consistent and compatible with the character of the surrounding areas; and recommend approval of the proposed Change of Zoning from Transitional (T) to RSF-1B for the property located at 2378 Marden Road.

This item is considered Legislative. The staff report and its findings are to be incorporated into and made a part of the minutes of this meeting.

Vice-Chairperson Laurendeau opened the meeting for public hearing. With no one wishing to speak, Vice-Chairperson Laurendeau closed the public hearing.

**Motion:** **William Gusler made a motion to find the proposed amendment consistent and compatible with the character of the surrounding areas; and recommend approval of the proposed Change of Zoning from Transitional (T) to RSF-1B subject to the findings in the staff report for the property owned by Ramjit Bhoodram Life Estate; Ramjit Ethel R Life Estate; Rem: Ramjit Family Trust and located at 2378 Marden Road. Motion seconded by Butch Stanley. Aye votes were cast by Linda Laurendeau, William Gusler, Mary Norwood, Robert Ryan, and Butch Stanley (5-0).**

**LEGISLATIVE – FINAL DEVELOPMENT PLAN – SIGLE HOLDINGS (LAKE GEM LOT 2)** - Vice-Chairperson Laurendeau stated this is a request to find the Sigle Holdings (Lake Gem Lot 2) Final Development Plan consistent with the Comprehensive Plan and Land Development Code; and recommend approval of the Sigle Holdings (Lake Gem Lot 2) Final Development Plan, subject to the findings of the staff report for the property owned by Property Industrial Enterprises, LLC, c/o Michael Cooper, and located at 651 Marshall Lake Road.

Staff Presentation: Jean Sanchez, Planner II, stated this is a request to find the Sigle Holdings (Lake Gem Lot 2) Final Development Plan consistent with the Comprehensive Plan and Land Development Code; and recommend approval of the Sigle Holdings (Lake Gem Lot 2) Final Development Plan, subject to the findings of the staff report for the property owned by Property Industrial Enterprises, LLC, c/o Michael Cooper, and located at 651 Marshall Lake Road. The future land use is Industrial and the zoning is PUD (Planned Unit Development)/I-1. The existing use is vacant land and the proposed use is industrial with a 6,400 square foot office and a 10,800 square foot warehouse for a total of 17,200 square feet (SF). The proposed floor area ration is 0.21 with an allowed maximum of 0.60 FAR. The applicable code for this project is the 1993 Land Development Code. The tract size is 1.55 +/- acres or 67,518 square feet.

The Sigle Holdings (Lake Gem Commerce Center Lot 2) Final Development Plan is a site plan proposing a 17,200 square feet, two-story building for warehousing and office uses for an electrical contractor company. Located within the PUD/I-1 zoning district, Lot 2 contains 1.55 acres. Lake Gem Commerce complies with the development standards for I-1 zoning district but allowed for a building height of up 50 feet, as is proposed in this site plan, and subject to the all other standards within PUD Ordinance No. 2447.

The minimum setbacks applicable to this project are:

| Setback | Min. Standard |
|---|---|
| Front* | 25’ |
| Side | 10’ |
| Rear | 10’* |
| Corner | 25’ |

*30 feet setback from residential uses or zoning districts.

Ingress/egress access points for the development will be via Marshall Lake Road. Forty-nine parking spaces, including three accessible parking spaces, are provided as required by Code.

A transportation impact analysis (TIA) was conducted for the Lake Gem Commercial Center Industrial Park to assess the impacts of the total project on the surrounding roadway segments and intersections within a one-mile radius of the project per the City’s adopted TIA methodology. Marshall Lake Building Lot 10 is one of 12 lots located in the 90,000 square feet Lake Gem Industrial Park project, representing about 8% of the total project. Included in the analysis were segments of Bradshaw Road, Marshall Lake Road, and W 1st Street. The intersection of Bradshaw Road and Lake Marshall Road along with the site entrance were also analyzed.

The Lake Gem Industrial Park project will generate 627 daily trips and 87 P.M. Peak Hour trips. Marshall Lake Building Lot 10 will generate 52 daily trips and 7 P.M. Peak Hour Trips. The addition of the project trips for the entire Lake Gem Industrial Park to the study roadways will not cause the Level of Service (LOS) to fall below the City’s adopted LOS. The intersection of Bradshaw Road and Marshall Lake Road and the site entrance will operate at acceptable Levels of Service with the addition of project generated traffic.

The stormwater management system includes an on-site retention area on the western portion of the Lake Gem Commerce Park. The stormwater pond design has been previously reviewed under the Lake Gem Commerce Park and meets the City’s Land Development Code requirements.

A mixture of Live Oaks and Cabbage Palms will be planted within the 25-foot wide landscaped buffer provided along Marshall Lake Road. Loblolly Pines and Japanese Blueberry trees are provided on the northern buffer area. One Japanese Blueberry tree or Live Oak is provided for each parking island, which is a minimum of 8-feet in width and matches the length of the adjacent parking spaces.

The County was notified at the time of the subdivision plan and plat for this property through the DRC agenda distribution.

The Development Review Committee recommended approval of the Sigle Holdings (Lake Gem Lot 2) Final Development Plan subject to the findings of this staff report.

The role of the Planning Commission is to advise the City Council to approve, deny, or approve with conditions based on consistency with the Comprehensive Plan and Land Development Code.

Staff recommended the Planning Commission find the Sigle Holdings (Lake Gem Lot 2) Final Development Plan consistent with the Comprehensive Plan and Land Development Code, and recommend approval of the Sigle Holdings (Lake Gem Lot 2) Final Development Plan, subject to the findings of this staff report.

This item is considered Legislative. The staff report and its findings are to be incorporated into and made a part of the minutes of this meeting.

Vice-Chairperson Laurendeau opened the meeting for public hearing. With no one wishing to speak, Vice-Chairperson Laurendeau closed the public hearing.

**Motion:** **Butch Stanley made a motion to find the Sigle Holdings (Lake Gem Lot 2) Final Development Plan consistent with the Comprehensive Plan and Land Development Code; and recommend approval of the Sigle Holdings (Lake Gem Lot 2) Final Development Plan, subject to the findings of the staff report for the property owned by Property Industrial Enterprises, LLC, c/o Michael Cooper, and located at 651 Marshall Lake Road. Motion seconded by William Gusler. Aye votes were cast by Linda Laurendeau, William Gusler, Mary Norwood, Robert Ryan, and Butch Stanley (5-0).**

**OLD BUSINESS:** None

**NEW BUSINESS:**

**Ramjit Future Land Use and Zoning Amendments -** Mr. Gusler requested clarification of the address for the Ramjit Bhoodram Life Estate; Ramjit Ethel R Life Estate; Rem: Ramjit Family Trust future land use and zoning changes. The agenda listed the address as 2375 Marden Road but the staff reports listed the address as 2378 Marden Road.

Mr. Hitt stated the address is 2378 Marden Road.

Mr. Byrd stated this would be considered a scrivener's error and corrections will be made before the items are presented to City Council.

**City Population:** Mr. Hitt announced the new population numbers have been received for the City. The new population is 52,404 residents.

**ADJOURNMENT:** The meeting was adjourned at 5:43 p.m.

_____
Linda Laurendeau, Vice-Chairperson

_____
James K. Hitt, FRA-RA
Community Development Director

# CITY OF APOPKA
# PLANNING COMMISSION

| | | | |
|---|---|---|---|
| X | PUBLIC HEARING | MEETING OF: | October 8, 2019 |
| | SITE PLAN | FROM: | Community Development |
| | SPECIAL REPORTS | EXHIBITS: | Vicinity Map |
| X | OTHER: Final Development Plan | | Site Location Map |
| | | | Aerial Map |
| | | | Final Development Plan |

**SUBJECT:** **AUTO BASE HOLDINGS (Lake Gem Lot 3) Final Development Plan**

**REQUEST:** **RECOMMEND APPROVAL OF THE FINAL DEVELOPMENT PLAN FOR AUTO BASE HOLDINGS (LAKE GEM LOT 3)**

**SUMMARY:**

| | |
|---|---|
| OWNER/APPLICANT: | Property Industrial Enterprises, LLC c/o Michael R. Cooper |
| ENGINEER: | Ken Ehlers, P.E. |
| LOCATION: | 601 Marshall Lake Road |
| PARCEL ID #: | 09-21-28-4453-03-000 |
| FUTURE LAND USE: | Industrial |
| ZONING: | PUD (Planned Unit Development)/I-1 |
| EXISTING USE: | Vacant |
| PROPOSED USE: | Industrial/Lot 3 of the Lake Gem Commerce Center |
| TRACT SIZE: | 1.31 +/- acres; 57,063 square feet |
| BUILDING SIZE: | Total 7,430 square feet (SF); 4290 SF Warehouse and 3,200 SF Office |
| FLOOR AREA RATIO: | Proposed 0.15; Maximum 0.60 |
| LAND DEVELOPMENT CODE: | 1993 |

**DISTRIBUTION**

| | | |
|---|---|---|
| Mayor Nelson | Finance Director | Public Services Director |
| Commissioners | HR Director | Recreation Director |
| City Administrator | IT Director | City Clerk |
| Community Development Director | Police Chief | Fire Chief |

## RELATIONSHIP TO ADJACENT PROPERTIES:

| ***Direction*** | ***Future Land Use*** | ***Zoning*** | ***Present Use*** |
|---|---|---|---|
| North (City) | Industrial | PUD/I-1 | Lake Gem Commerce Center Tract B Retention Pond |
| East (City) | Industrial | PUD/I-1 | Lake Gem (Vacant) Lot 3 |
| South (City) | Public Right-of-Way (ROW) and Industrial | ROW/I-1 | Marshall Lake Road/Single Family Residence/Horticulture |
| West (City) | Conservation\Industrial | I-1 | Lake Gem Lot 1 |

**PROJECT SUMMARY:** The Auto Base Holdings (Lake Gem Commerce Center Lot 3) Final Development Plan is a site plan proposing a 7,490 square feet building for warehousing and office uses for a roadside assistance service company. No outdoor storage and servicing of vehicles will occur on site. Parking of vehicles must occur within designated parking stalls. Located within the PUD/I-1 zoning district, Lot 3 contains 1.31 acres. Lake Gem Commerce complies with the development standards for I-1 zoning district but allowed for a building height of up 50 feet, as is proposed in this site plan, and subject to the all other standards within PUD Ordinance No. 2447.

The minimum setbacks applicable to this project are:

| **Setback** | **Min. Standard** |
|---|---|
| Front* | 25’ |
| Side | 10’ |
| Rear | 10’* |
| Corner | 25’ |

*30 feet setback from residential uses or zoning districts.

**ACCESS/PARKING:** Ingress/egress access points for the development will be via Gem Commerce Court. Twenty-two parking spaces, including one accessible parking space, are provided as required by Code.

**TRANSPORTATION:** A transportation impact analysis (TIA) was conducted for the Lake Gem Commercial Center Industrial Park to assess the impacts of the total project on the surrounding roadway segments and intersections within a one-mile radius of the project per the City’s adopted TIA methodology. Marshall Lake Building Lot 10 is one of 12 lots located in the 90,000 square feet Lake Gem Industrial Park project, representing about 8% of the total project. Included in the analysis were segments of Bradshaw Road, Marshall Lake Road, and W 1st Street. The intersection of Bradshaw Road and Lake Marshall Road along with the site entrance were also analyzed.

The Lake Gem Industrial Park project will generate 627 daily trips and 87 P.M. Peak Hour trips. Marshall Lake Building Lot 10 will generate 52 daily trips and 7 P.M. Peak Hour Trips. The addition of the project trips for the entire Lake Gem Industrial Park to the study roadways will not cause the Level of Service (LOS) to fall below the City’s adopted LOS. The intersection of Bradshaw Road and Marshall Lake Road and the site entrance will operate at acceptable Levels of Service with the addition of project generated traffic.

**STORMWATER:** The stormwater management system includes an on-site retention area on the western portion of the Lake Gem Commerce Park. The stormwater pond design has been previously reviewed under the Lake Gem Commerce Park and meets the City's Land Development Code requirements.

**BUFFER:** Four Live Oak trees will be preserved. Cabbage Palms and two of the preserve Live Oaks are within the southern 25-foot wide buffer yard. Loblolly Pines and Japanese Blueberry trees are provided on the northern buffer area. One Japanese Blueberry tree is provided for each parking island, which is a minimum of 8-feet in width and matches the length of the adjacent parking spaces.

**ORANGE COUNTY NOTIFICATION**: The County was notified at the time of the subdivision plan and plat for this property through the DRC agenda distribution.

**PUBLIC HEARING SCHEDULE**:
October 8, 2019 - Planning Commission, 5:30 p.m.
October 16, 2019 - City Council, 7:00 p.m.

---

**RECOMMENDATION ACTION:**

The **Development Review Committee** recommends approval of the Auto Base Holdings (Lake Gem Lot 3) Final Development Plan subject to the findings of this staff report.

**Planning Commission**: Find the Auto Base Holdings (Lake Gem Lot 3) Final Development Plan consistent with the Comprehensive Plan and Land Development Code, and recommend approval of the Auto Base Holdings (Lake Gem Lot 3) Final Development Plan, subject to the findings of this staff report.

**Planning Commission Role:** To advise the City Council to approve, deny, or approve with conditions based on consistency with the Comprehensive Plan and Land Development Code.

**Note: This item is considered Legislative. The staff report and its findings are to be incorporated into and made a part of the minutes of this meeting.**

**Project Name:** Auto Base Holdings (Lake Gem Lot 3) Final Development Plan
**Owner:** Property Industrial Enterprises, LLC c/o Michael R. Cooper
**Engineer:** Ken Ehlers, P.E.
**Parcel I.D. No:** 09-21-28-4453-03-000
**Location:** 601 Marshall Lake Road
**Total Acres:** 1.31 +/- Acres

# VICINITY MAP

# SITE LOCATION MAP

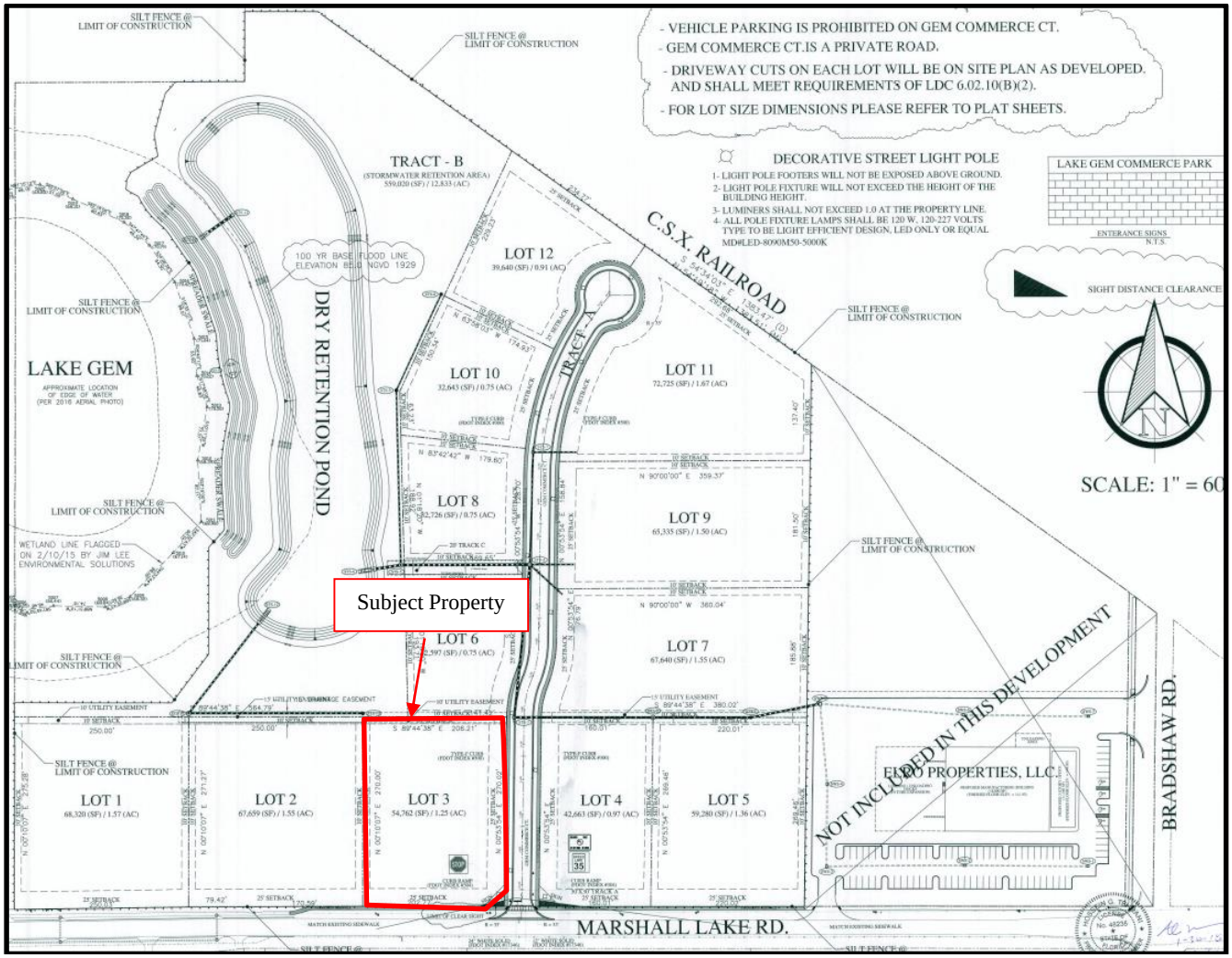

# AERIAL MAP

TRACT C
GEM COMMER
TRACT A
Subject Property
MARSHALL LAKE RD
N

## SUBDIVISION PLAN
## INDEX OF DRAWINGS

| SHEET NO. | SHEET DESCRIPTION |
|---|---|
| 1 | COVER SHEET |
| 2 | SITE DEVELOPMENT PLAN |
| 3 | GRADING, DRAINAGE AND UTILITY PLAN |
| 4 | CITY OF APOPKA DETAILS |
| 5 | CITY OF APOPKA DETAILS |
| 6 | CITY OF APOPKA DETAILS |
| 7 | STANDARD DETAILS |
| 8 | DRAINAGE DETAILS |
| 9 | LANDSCAPE PLAN |
| 10 | IRRIGATION PLAN |
| 11 | PHOTOMETRIC PLAN |

PROPERTY OWNER: PROPERTY INDUSTRIAL ENTERPRISES, LLC
MICHAEL R. COOPER (407) 889-2510

REFERENCE: CITY OF APOPKA ORDINANCE #2447
"CHANGE OF ZONING".

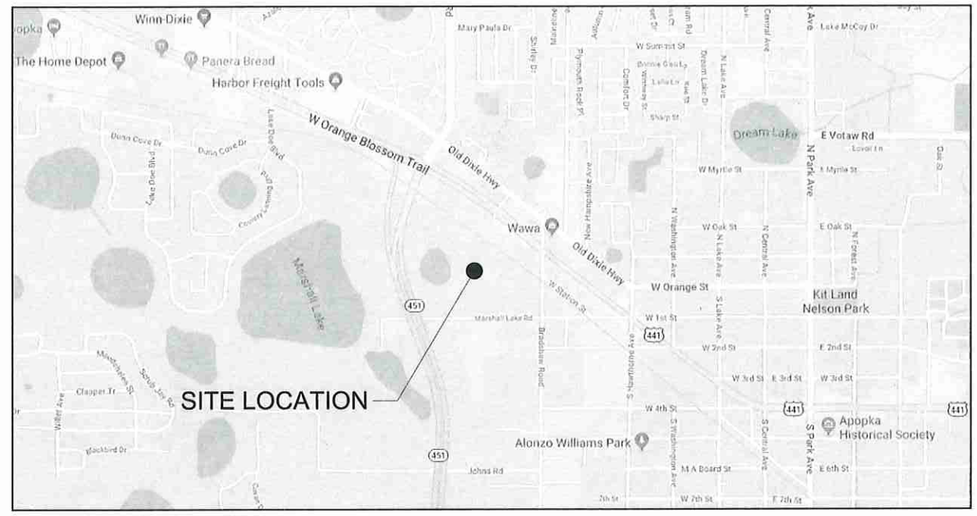


VICINITY MAP

NTS

# FINAL DEVELOPMENT PLAN
# FOR AUTO BASE INC.

## BUSINESS / WAREHOUSE
## LAKE GEM COMMERCE PARK
## SUBDIVISION PLAN

## PARCEL ID: 09-21-28-4453-03-000

## LOT #3
## ADDRESS: 601 MARSHALL LAKE ROAD

## CITY OF APOPKA
## AUGUST, 2019

VEHICLE PARKING NOTE

NO PARKING OF OPERABLE OR INOPERABLE VEHICLES ARE PERMITTED WITHIN DRIVE AISLES OUTSIDE OF PARKING SPACES.

KENNETH H. EHLERS LICENSE NO. 18243 STATE OF FLORIDA PROFESSIONAL ENGINEER

48 HOURS BEFORE DIGGING
CALL TOLL FREE
1-800-432-4770
SUNSHINE STATE ONE CALL OF FLORIDA, INC.

9 30 19

KENNETH H. EHLERS, FL PE #18243

PLAN NOTES

# COVER SHEET
AUTO BASE INC.
601 MARSHALL LAKE ROAD
APOPKA, FLORIDA 32703

| NO. | REVISION/ISSUE | DATE |
|---|---|---|
| 1 | DRC COMMENTS | 092719 |
| | | |
| | | |


ENGINEER OF RECORD
KEN EHLERS, P.E.
FLORIDA P.E. LICENSE NO. 18243
PROFESSIONAL ENGINEERING SERVICES
6034 FALCONBRIDGE PLACE
MOUNT DORA, FL 32757
CELL PHONE: (407) 448-3412


PROJECT NAME
AUTO BASE INC.
LOT #3

| DWG SHEETS 1-11 | SHEET |
|---|---|
| DATE AUGUST 29, 2019 | 1 |
| SCALE AS SHOWN | |

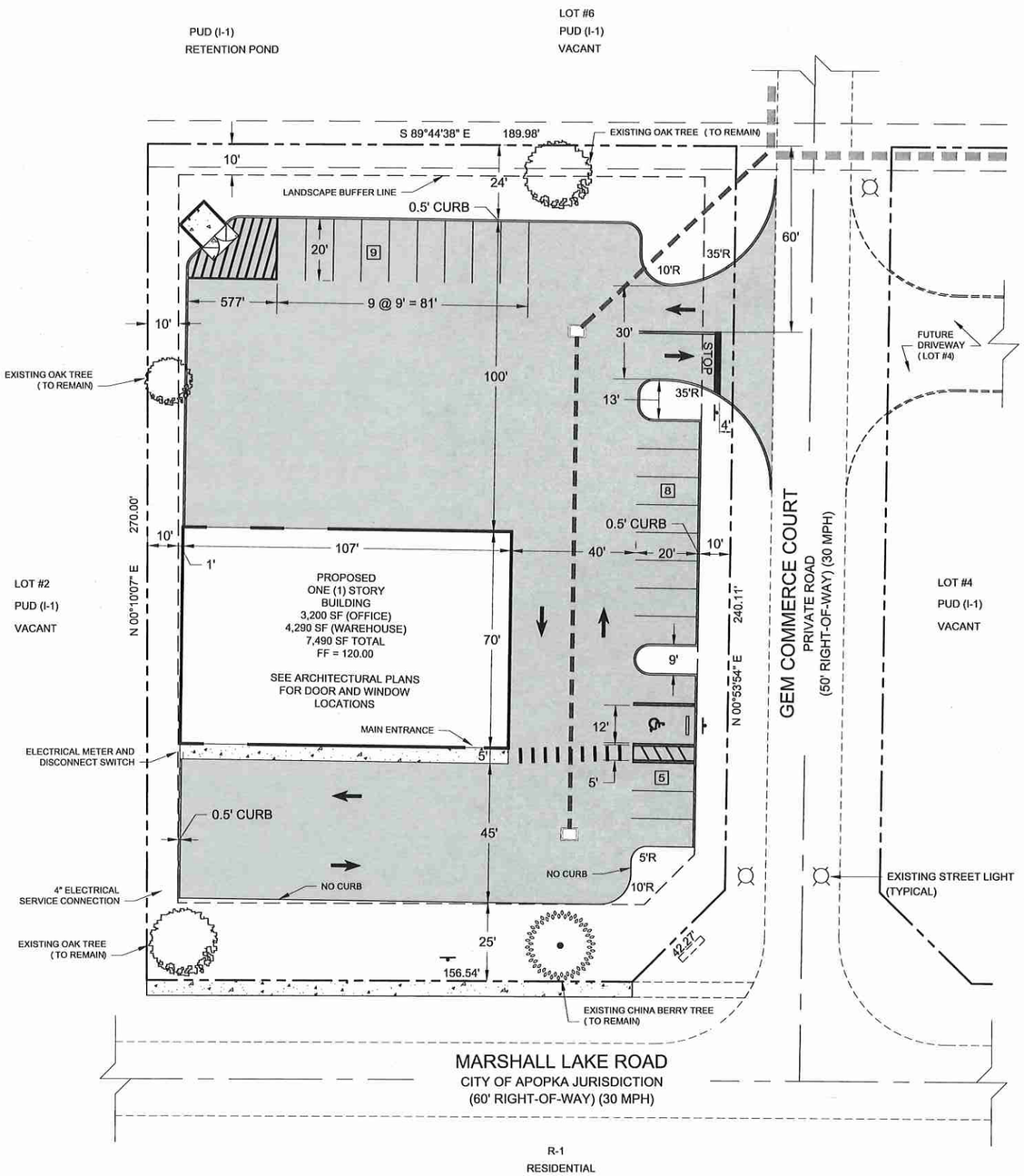


# SITE DEVELOPMENT PLAN

GRAPHIC SCALE

0' 10' 20' 40' 60'

1" = 20'

## SITE DATA

**CURRENT ZONING:** PUD (I-1)

**FUTURE LAND USE:** INDUSTRIAL

**BUILDING SETBACK:**

FRONT = 25 FEET (FACING MARSHALL LAKE RD AND GEM COMMERCE COURT)
SIDE = 10 FEET
REAR = 10 FEET

**LANDSCAPE BUFFER:**

FRONT = 25 FEET (FACING MARSHALL LAKE RD)
SIDE = 10 FEET
REAR = 10 FEET

**FLOOR AREA RATIO ALLOWED:** = 0.60

**FLOOR AREA RATIO PROVIDED:** = 0.15

**BUILDING INFORMATION:**

TOTAL SQUARE FOOTAGE = 7,490 SF
MAX. BUILDING HEIGHT = 50 FT
ACTUAL BUILDING HEIGHT = 25 FT

**PARKING REQUIREMENTS:**

2 SPACES PER 1,000 SF OF WAREHOUSE AREA
1 SPACE PER 250 SF OFFICE AREA

2 SPACES X (4,290 SF/1,000 SF) = 9 SPACES
1 SPACE X (3,200 SF/250 SF) = 13 SPACES
TOTAL SPACES REQUIRED = 22

**PARKING PROVIDED:**

21 SPACES @ 9'x20' (REGULAR)
1 SPACES @ 12'x20' (HANDICAP)
22 SPACES TOTAL PROVIDED

**PROPOSED CONDITIONS:**

| | | |
|---|---|---|
| IMPERVIOUS (BUILDINGS) | = | 7,490 SF = 0.172 AC (15.33%) |
| IMPERVIOUS (DRIVEWAYS) | = | 27,622 SF = 0.634 AC (56.51%) |
| PERVIOUS | = | 13,758 SF = 0.316 AC (28.16%) |
| TOTAL | = | 48,870 SF = 1.122 AC (100.00%) |

**PARCEL ID NUMBER:**

09-21-28-4453-03-000

## FINAL DEVELOPMENT PLANS

1. FINAL DEVELOPMENT PLANS FOR LAKE GEM COMMERCE PARK (DATED 8/21/17) WERE APPROVED BY THE CITY OF APOPKA (COA) AND CITY COUNCIL ON 3/21/18.
2. THE PLAT AND TOPO WERE PROVIDED WITH THE FINAL DEVELOPMENT PLANS AND WERE APPROVED BY THE COA CITY COUNCIL ON 3/21/18.
3. WE WILL TIE INTO THE EXISTING STORMWATER SYSTEM PER APPROVED FINAL DEVELOPMENT PLAN APPROVED BY THE COA AND CITY COUNCIL ON 3/21/18.
4. IMPERVIOUS 80% AND PERVIOUS 20% WERE APPROVED BY ST. JOHNS RIVER WATER MANAGEMENT DISTRICT.
5. GENERAL NOTES PLUS PAVING, GRADING NOTES AND UTILITY NOTES WERE COMPLETED AND APPROVED WITH THE FINAL DEVELOPMENT PLANS BY THE COA AND CITY COUNCIL ON 3/21/18.
6. THIS PLAN INDICATES THE LOCATION OF THE PROPERTY BOUNDARY, AS PROVIDED BY NIETO WHITTAKER, LLC, A FLORIDA LICENSED LAND SURVEYING COMPANY.
7. THE ENGINEER OF RECORD DOES NOT CERTIFY TO THE CORRECTNESS OF THE BOUNDARY, WHICH HAS BEEN PROVIDED FOR INFORMATIONAL AND CIVIL ENGINEERING DESIGN PURPOSES ONLY.

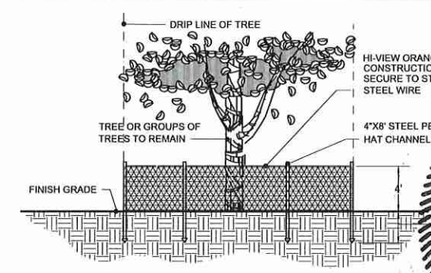


## TREE PROTECTION BARRIER

NOT TO SCALE

NOTE:
NO STOCKPILING OF MATERIALS, TRASH OR DEBRIS SHALL BE PERMITTED WITHIN THE BARRIER.

### TREE PROTECTION

EXISTING TREES SHALL BE MAINTAINED TO THE GREATEST EXTENT POSSIBLE AND PROTECTED DURING CONSTRUCTION PER THE CITY'S DEVELOPMENT DESIGN GUIDELINES SECTION 4.5.

48 HOURS BEFORE DIGGING
CALL TOLL FREE
1-800-432-4770
SUNSHINE STATE ONE CALL OF FLORIDA, INC.

KENNETH H. EHLERS LICENSE NO. 18243 STATE OF FLORIDA PROFESSIONAL ENGINEER

9 30 19

KENNETH H. EHLERS, FL PE #18243

PLAN NOTES

# SITE DEVELOPMENT PLAN

AUTO BASE INC.
601 MARSHALL LAKE ROAD
APOPKA, FLORIDA 32703

| NO. | REVISION/ISSUE | DATE |
|---|---|---|
| 1 | DRC COMMENTS | 092719 |
| | | |
| | | |


ENGINEER OF RECORD
KEN EHLERS, P.E.
FLORIDA P.E. LICENSE NO. 18243
PROFESSIONAL ENGINEERING SERVICES
6034 FALCONBRIDGE PLACE
MOUNT DORA, FL 32757
CELL PHONE: (407) 448-3412


PROJECT NAME
AUTO BASE INC.
LOT #3

| DWG SHEETS 1-11 | SHEET |
|---|---|
| DATE AUGUST 29, 2019 | 2 |
| SCALE AS SHOWN | |

## GENERAL NOTES:

1. THE OWNER WILL DEDICATE AN EASEMENT TO THE CITY OF APOPKA FOR THE OPERATION AND MAINTENANCE OF THE ON-SITE PRIVATE WATER METERS.
2. ALL WATER MAINS AND SEWER LATERALS SHALL HAVE A MINIMUM 3 FEET OF COVER UNLESS OTHERWISE SPECIFIED ON THE PLANS.
3. INSTALL ADA CURB RAMPS PER FDOT ROADWAY AND TRAFFIC DESIGN STANDARDS - INDEX 304, LATEST EDITION.
4. SYMBOLS SUCH AS STRUCTURES, VALVES, METERS, BACKFLOW DEVICES, ETC. ARE NOT DRAWN TO SCALE.
5. CONTRACTOR TO GRADE SOILS SO THAT THE ELEVATIONS ARE 0.10' BELOW IMMEDIATELY ADJACENT SIDEWALK.
6. HANDICAPPED RAMP MUST MEET THE REQUIREMENTS OF THE FLORIDA STATUTES AND THE FLORIDA BUILDING CODE.
7. ALL CONCRETE SIDEWALKS ARE TO BE CONSTRUCTED AT 2.00% MAXIMUM SLOPE PER THE ADA.
8. THE BUILDING AND ALL PROPOSED INFRASTRUCTURES, E.G., PAVEMENT, DRAINAGE, SIDEWALKS, SANITARY COLLECTION, POTABLE WATER AND FIRE PROTECTION, ETC. WILL BE CONSTRUCTED IN SINGLE PHASE.
9. NO OUTSIDE STORAGE OR MAINTENANCE. REFER TO COVENANTS AND RESTRICTIONS FOR LAKE GEM COMMERCE PARK.
10. INTENDED USE: OFFICE / WAREHOUSE (ROAD RANGERS - HUB FOR PARKING SERVICE VEHICLES).
11. DIRECTIONAL ARROWS PER FDOT STANDARD INDEX 17346 (LATEST EDITION).

## FIRE PROTECTION NOTES:

1. FIRE HYDRANT MUST BE LOCATED WITHIN 250 FEET OF BUILDING.
2. FOLLOW FLORIDA STATUTES 633.027 CONCERNING LIGHT FRAME TRUSS CONSTRUCTION.
3. FOLLOW CURRENT NFPA AND FLORIDA FIRE PREVENTION CODE 6TH EDITION CONCERNING FIRE AND LIFE SAFETY.
4. OWNER MUST PROVIDE A LOCK BOX NEAR THE FRONT DOOR.

## DRAINAGE, UTILITY AND GENERAL NOTES

1. ALL PIPING IS MANUFACTURED BY ADVANCE DRAINAGE SYSTEMS.
2. ALL CONCRETE STRUCTURES MANUFACTURED BY MACK CONCRETE.
3. VEHICLE PARKING IS PROHIBITED ON THE SPINE ROAD (MARSHALL LAKE ROAD).
4. POTABLE AND RECLAIMED WATER METERS TO BE INSTALLED BY THE CITY OF APOPKA.
5. ALL EQUIPMENT (INCLUDING ON THE ROOF TOP), WATER MAINS, BACKFLOW PREVENTERS AND UTILITY BOXES MUST BE FULLY SCREENED (INCLUDING AT THE REAR OF THE BUILDING).

## DRAINAGE STRUCTURE TABLE

| STRUCTURE NUMBER: | STRUCTURE TYPE: | RIM: | INVERTS: |
|---|---|---|---|
| DS-1 | EXISTING INLET | 116.00 | 105.30 N, 108.91 E, 111.00 SW |
| DS-2 | TYPE 'E' INLET | 118.33 | 112.48 S, 112.32 NE |
| DS-3 | TYPE 'C' INLET | 119.00 | 114.33 N |

## SANITARY SEWER STRUCTURE TABLE

| STRUCTURE NUMBER: | STRUCTURE TYPE: | RIM: | INVERTS: |
|---|---|---|---|
| SS-1 | EXISTING MANHOLE | 110.50 | 106.60 E & S, 93.50 W & N |
| | EXISTING DROP CONNECTION | | 107.50 SW |
| SS-2 | DROP MANHOLE | 116.00 | 113.80 S, 107.80 W |
| SS-3 | 2-WAY CLEANOUT | 119.95 | 117.40 N |

## EXISTING UNDERGROUND AND OVERHEAD UTILITIES

THE CONTRACTOR SHALL BE RESPONSIBLE FOR VERIFYING SIZE, MATERIAL TYPE, LOCATION, DEPTH AND CONDITION OF ALL EXISTING UNDERGROUND AND OVERHEAD UTILITIES PRIOR TO CONSTRUCTION. THE ENGINEER-OF-RECORD HAS NO RESPONSIBILITY WITH REGARD TO THE COMPLETENESS AND/OR ACCURACY OF INFORMATION SHOWN ON THIS PLAN WITH REGARD TO THE EXISTING AND/OR NON-EXISTENCE OF UNDERGROUND OR OVERHEAD UTILITIES.

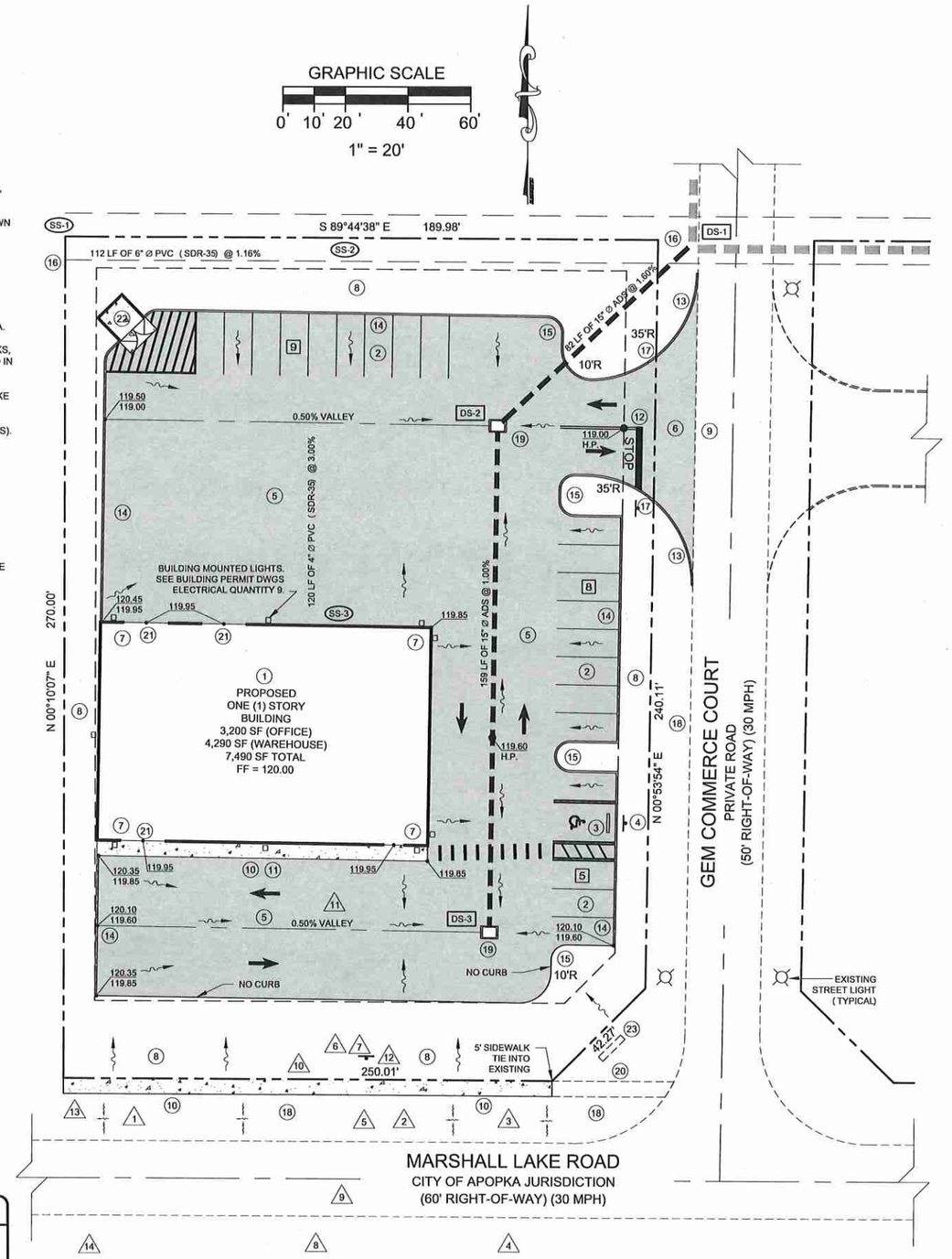


# GRADING, DRAINAGE AND UTILITY PLAN

## CONSTRUCTION NOTES:

1. CONSTRUCT ONE (1) STORY BUILDING. SEE ARCHITECTURAL PLANS FOR DOOR AND WINDOW LOCATIONS PLUS DIMENSIONS.
2. STRIPE THE PROPOSED REGULAR PARKING SPACES PER THE MANUAL ENTITLED "MANUAL ON UNIFORM TRAFFIC CONTROL DEVICES" (MUTCD).
3. STRIPE AND SIGN THE PROPOSED HANDICAPPED PARKING SPACES PER THE DOCUMENTS ENTITLED "AMERICANS WITH DISABILITIES ACT" (A.D.A. & THE MUTCD) (SEE PLAN SHEET 8).
4. INSTALL FTP-25 STANDARD HANDICAPPED PARKING SIGN PER FDOT STANDARD INDEX (LATEST EDITION).
5. CONSTRUCT 1 ½" ASPHALTIC CONCRETE SURFACE (TYPE S-III), 6" LIMEROCK AND 12" STABILIZED SUBBASE. REFER TO PLAN SHEET 7 FOR CONSTRUCTION DETAILS.
6. **RIGHT- OF-WAY:** CONSTRUCT 1 ½" ASPHALTIC CONCRETE SURFACE TYPE SP-9.5, 8" LIMEROCK AND 12" STABILIZED SUBBASE. REFER TO PLAN SHEETS 8 FOR CONSTRUCTION DETAILS.
7. INSTALL DOWNSPOUT WITH CONCRETE SPLASHBLOCK TO DRAIN TO PAVEMENT (SEE PLAN SHEET 8).
8. ALL GREEN AREAS TO BE SODDED AND/OR LANDSCAPED AS SHOWN ON LANDSCAPE PLAN (SEE PLAN SHEET 9).
9. MATCH EDGE OF EXISTING PAVEMENT WITH SAW CUT(SEE PLAN SHEET 8).
10. CONSTRUCT 5' WIDE CONCRETE SIDEWALK (SEE PLAN SHEET 7) (DRAIN AWAY FROM BUILDING AND/OR INTO RIGHT-OF-WAY).
11. SIDEWALK ELEVATION FLUSH WITH PAVEMENT.
12. CONSTRUCT 16.5 LF OF 24" STOP BAR AND STOP SIGN (SEE PLAN SHEET 7).
13. FLUSH CURB 8" WIDE X 12" DEEP (SEE PLAN SHEET 8).
14. CONSTRUCT STANDARD FDOT TYPE "D" CURB PER THE FDOT ROADWAY AND TRAFFIC DESIGN STANDARDS INDEX 300, LATEST EDITION (SEE PLAN SHEET 7).
15. ALL CURB RADII ARE 4'-6" AS MEASURED FROM THE INSIDE FACE OF CURB UNLESS OTHERWISE NOTED.
16. EXISTING DRAINAGE INLET AND SANITARY SEWER MANHOLES PER FSDP. CONTRACTOR TO VERIFY RIM AND INVERT ELEVATIONS.
17. 3' CONCRETE CURB TAPER (SEE PLAN SHEET 7).
18. REPLACE EXISTING SOD TO AN EQUAL TO OR BETTER THAN ORIGINAL CONDITION.
19. CONTRACTOR TO ENSURE POSITIVE FLOW TO INLETS.
20. EXISTING 5' SIDEWALK TO REMAIN.
21. 21. 14' X 14' ROLL UP DOORS (TYPICAL AT THREE PLACES).
22. DUMPSTER ENCLOSURE (SEE PLAN SHEET 5). 11'-4" X 5'-0" X 6" THICK CONCRETE PAD (SEE PLAN SHEET 8).
23. EXISTING SIGN TO REMAIN.

## UTILITY NOTES:

1. NEW 2" PVC (C900) RE-USE WATER LINE.
2. NEW 3" PVC (C900) RE-USE WATER LINE.
3. EXISTING 8" PVC (C900) RE-USE WATER LINE.
4. EXISTING 8" PVC (C900) DOMESTIC WATER MAIN.
5. 1" X 3" TAPPING SLEEVE AND VALVE (SEE PLAN SHEET 6).
6. FOR IRRIGATON (SEE PLAN SHEET 10).
7. TEMPORARY IRRIGATION CAP.
8. 1" X 3" TAPPING SLEEVE AND VALVE (SEE PLAN SHEET 6).
9. CLEANOUT (SEE CITY OF APOPKA UTILITIES DESIGN AND CONSTRUCTION STANDARDS MANUAL).
10. 50 LF OF 1" Ø PVC (C900) WATER LINE WITH 1" METER, VALVE AND REDUCED PRESSURE BACKFLOW PREVENTER.
11. 62 LF OF 1" Ø PVC (C900) WATER SERVICE LINE WITH VALVE AT BUILDING.
12. RECLAIMED WATER ADVISORY SIGN (SEE CITY OF APOPKA UTILITIES DESIGN AND CONSTRUCTION STANDARDS MANUAL).
13. EXISTING DUKE ENERGY POWER POLE (TO REMAIN).
14. EXISTING FIRE HYDRANT ASSEMBLY.

KENNETH H. EHLERS, FL PE #18243

48 HOURS BEFORE DIGGING
CALL TOLL FREE
1-800-432-4770
SUNSHINE STATE ONE CALL OF FLORIDA, INC.



PLAN NOTES

# GRADING, DRAINAGE AND UTILITY PLAN

AUTO BASE INC.
601 MARSHALL LAKE ROAD
APOPKA, FLORIDA 32703

| NO. | REVISION/ISSUE | DATE |
|---|---|---|
| 1 | DRC COMMENTS | 092719 |
| | | |
| | | |


ENGINEER OF RECORD
KEN EHLERS, P.E.
FLORIDA P.E. LICENSE NO. 18243
PROFESSIONAL ENGINEERING SERVICES
6034 FALCONBRIDGE PLACE
MOUNT DORA, FL 32757
CELL PHONE: (407) 448-3412


PROJECT NAME

AUTO BASE INC.

LOT #3

| DWG | SHEET |
|---|---|
| SHEETS 1-11 | 3 |
| DATE AUGUST 29, 2019 | |
| SCALE AS SHOWN | |

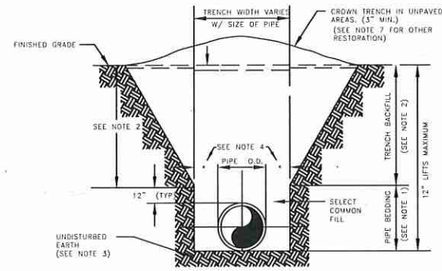


NOTES:

1. PIPE BEDDING: SELECT COMMON FILL COMPACTED TO 98% UNDER PAVEMENT OF THE MAXIMUM DENSITY AS PER AASHTO T-180.
2. TRENCH BACKFILL: COMMON FILL COMPACTED TO 98% UNDER PAVEMENT OF THE MAXIMUM DENSITY AS TO AASHTO T-180.
3. PIPE BEDDING UTILIZING SELECT COMMON FILL OR BEDDING ROCK IN ACCORDANCE WITH TYPE A BEDDING AND TRENCHING DETAIL MAY BE REQUIRED AS DIRECTED BY THE CITY.
4. (*): 15" MAX. FOR PIPE DIAMETERS LESS THAN 24", AND 24" FOR PIPE DIAMETER 24" AND LARGER.
5. WATER SHALL NOT BE PERMITTED IN THE TRENCH DURING CONSTRUCTION.
6. ALL PIPE TO BE INSTALLED WITH BELL FACING UPSTREAM TO THE DIRECTION OF THE FLOW.
7. FINAL RESTORATION IN IMPROVED AREAS SHALL BE IN COMPLIANCE WITH ALL APPLICABLE REGULATIONS OF GOVERNING AGENCIES.
8. SURFACE RESTORATION WITHIN CITY RIGHT-OF-WAY, SHALL COMPLY WITH REQUIREMENTS OF RIGHT-OF-WAY UTILIZATION REGULATIONS.
9. ALL UNPAVED DISTURBED AREAS SHALL BE SODDED TO MATCH ADJACENT DOMINATE GRASS SPECIES.

## TYPE "B" BEDDING AND OPEN-CUT DETAIL

| CITY OF APOPKA DESIGN ENGINEERING DIVISION | JANUARY 2014 | FIG. 100 |
|---|---|---|

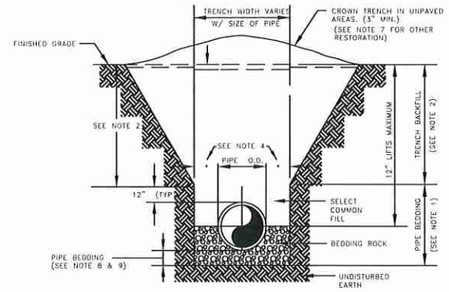


NOTES:

1. PIPE BEDDING: SELECT COMMON FILL COMPACTED TO 98% UNDER PAVEMENT OF THE MAXIMUM DENSITY AS PER AASHTO T-180.
2. TRENCH BACKFILL: COMMON FILL COMPACTED TO 98% UNDER PAVEMENT OF THE MAXIMUM DENSITY AS PER AASHTO T-180.
3. USE OF TYPE A BEDDING TO BE DETERMINED IN THE FIELD AS DIRECTED BY THE CITY.
4. (*): 15" MAX. FOR PIPE DIAMETER LESS THAN 24", AND 24" MAX. FOR PIPE DIAMETER 24" AND LARGER.
5. WATER SHALL NOT BE PERMITTED IN THE TRENCH DURING CONSTRUCTION.
6. ALL PIPE TO BE INSTALLED WITH BELL FACING UPSTREAM TO THE DIRECTION OF THE FLOW.
7. GRAVITY SEWERS SHALL UTILIZE TYPE A BEDDING IF REQUIRED BY THE CITY. BEDDING DEPTH SHALL BE 4" MINIMUM FOR PIPE DIAMETER LESS THAN 15" AND 6" MINIMUM FOR PIPE DIAMETER 16" AND LARGER.
8. DEPTH FOR REMOVAL OF UNSUITABLE MATERIAL SHALL GOVERN DEPTH OF BEDDING ROCK BELOW THE PIPE. THE CITY SHALL DETERMINE IN THE FIELD IF REMOVAL OF UNSUITABLE MATERIAL IS REQUIRED TO REACH A SUITABLE FOUNDATION.
9. ALL UNPAVED DISTURBED AREAS SHALL BE SODDED TO MATCH ADJACENT DOMINATE GRASS SPECIES.
10. FINAL RESTORATION IN IMPROVED AREAS SHALL BE IN COMPLIANCE WITH ALL APPLICABLE REGULATIONS OF THE GOVERNING AGENCIES. SURFACE RESTORATION WITHIN CITY RIGHT-OF-WAY, SHALL COMPLY WITH REQUIREMENTS OF RIGHT-OF-WAY UTILIZATION REGULATIONS.

## TYPE "A" BEDDING AND OPEN-CUT DETAIL

| CITY OF APOPKA DESIGN ENGINEERING DIVISION | JANUARY 2014 | FIG. 101 |
|---|---|---|

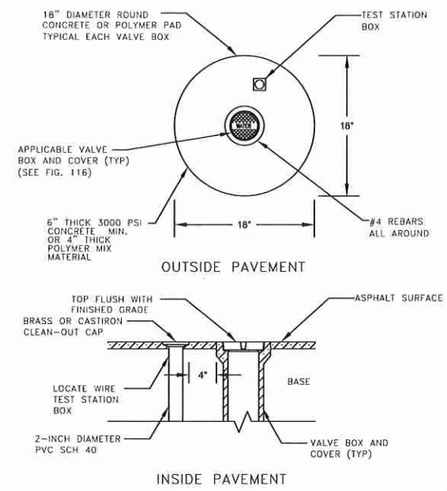


VALVE IDENTIFICATION TAG TO BE INSTALLED BY CITY & PAID FOR BY DEVELOPER

## VALVE BOX

| CITY OF APOPKA DESIGN ENGINEERING DIVISION | JANUARY 2014 | FIG. 109 |
|---|---|---|

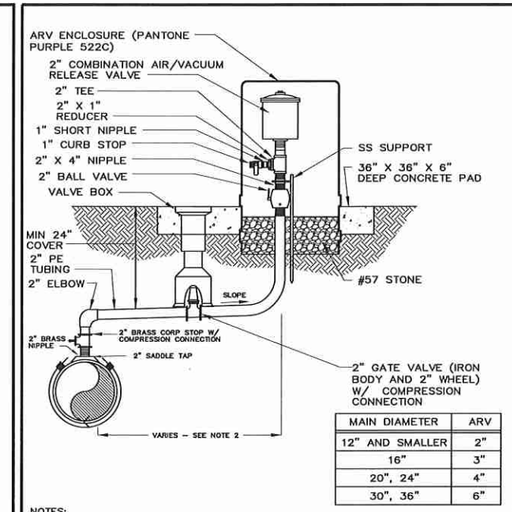


| MAIN DIAMETER | ARV |
|---|---|
| 12" AND SMALLER | 2" |
| 16" | 3" |
| 20", 24" | 4" |
| 30", 36" | 6" |

NOTES:
1. FOR RECLAIMED WATER USE ONLY.
2. OFFSET DISTANCE TO BE FIELD DETERMINED AND AS CLOSE TO THE R/W LINE AS POSSIBLE
3. ADJUST HORIZONTAL LOCATION OF SIDEWALK, AS REQUIRED TO AVOID ARV ENCLOSURE.
4. LOCATE ARV ENCLOSURE WITHIN 6" OF R/W LINE.

## OFFSET COMBINATION AIR/VACUUM RELEASE VALVE DETAIL - RECLAIMED WATER ONLY

| CITY OF APOPKA DESIGN ENGINEERING DIVISION | JANUARY 2014 | FIG. 113 |
|---|---|---|

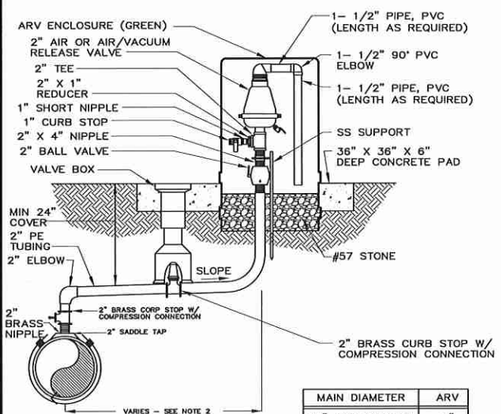


| MAIN DIAMETER | ARV |
|---|---|
| 12" AND SMALLER | 2" |
| 16" | 3" |
| 20", 24" | 4" |
| 30", 36" | 6" |

NOTES:
1. FOR WASTEWATER USE ONLY.
2. OFFSET DISTANCE TO BE FIELD DETERMINED AND AS CLOSE TO THE R/W LINE AS POSSIBLE
3. ADJUST HORIZONTAL LOCATION OF SIDEWALK, AS REQUIRED TO AVOID ARV ENCLOSURE.
4. LOCATE ARV ENCLOSURE WITHIN 6" OF R/W LINE.

## OFFSET AIR OR COMBINATION AIR/VACUUM RELEASE VALVE DETAIL - WASTEWATER ONLY

| CITY OF APOPKA DESIGN ENGINEERING DIVISION | JANUARY 2014 | FIG. 114 |
|---|---|---|

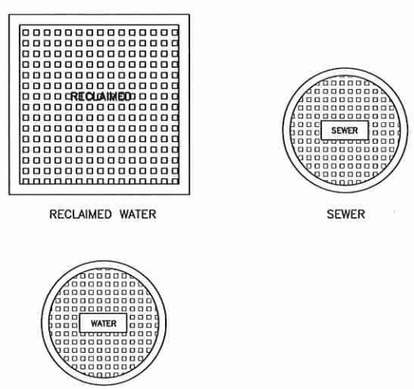


## TYPICAL VALVE BOX COVER DETAILS

| CITY OF APOPKA DESIGN ENGINEERING DIVISION | JANUARY 2014 | FIG. 116 |
|---|---|---|

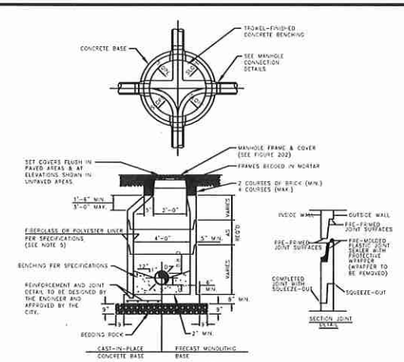


FORCE MAIN MANHOLE LINER

| THICKNESS (INCHES) | | | | | |
|---|---|---|---|---|---|
| DIAMETER (INCHES) | HEIGHT (FEET) 3-6 | 7-12 | 13-17 | MATERIAL | MANUFACTURER |
| 48 | | | | | |
| 60 | | | | | |
| 72 | | | | | |

* TO BE COMPLETED BY THE ENGINEER

NOTES:

1. MANHOLE SHOWN IS FOR SEWER SIZE 8" THRU 24". SEE SECTION 20.4 OF THE MANUAL FOR MANHOLE DIAMETER FOR SEWERS LARGER THAN 24".
2. DROP CONNECTIONS ARE REQUIRED WHENEVER INVERT OF INFLUENT SEWER IS 24" OR MORE ABOVE THE INVERT OF THE MANHOLE. SEE MANHOLE CONNECTION DETAILS.
3. THE THICKNESS OF THE LINER SHALL BE 3/8" MINIMUM
4. EACH BENCH WALL SHALL BE A MINIMUM OF 18 INCHES LONG FROM THE WALL OF THE MANHOLE TOWARD THE CENTER.
5. SANITARY SEWER MANHOLES MAY BE REQUIRED TO BE LINED WITH HOPE OR FIBERGLASS AS DIRECTED BY THE CITY.

## TYPICAL MANHOLE

| CITY OF APOPKA DESIGN ENGINEERING DIVISION | JANUARY 2014 | FIG. 200 |
|---|---|---|

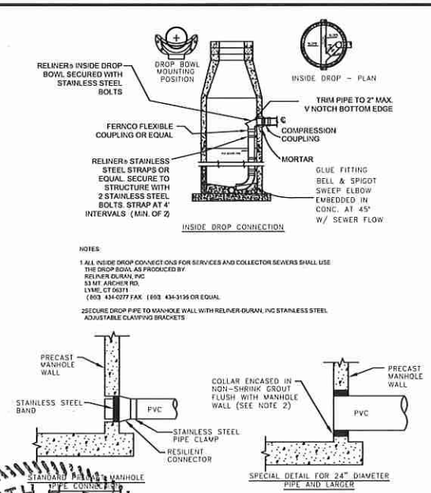


NOTES:

1. ALL INSIDE DROP CONNECTIONS FOR SERVICES AND COLLECTOR SEWERS SHALL USE THE DROP BOWL AS PRODUCED BY RELINER DURAN, INC 53 MT ARCHER RD. LYME, CT 06371 (860) 434-0277 FAX (860) 434-3135 OR EQUAL
2. SECURE DROP PIPE TO MANHOLE WALL WITH RELINER-DURAN, INC STAINLESS STEEL ADJUSTABLE CLAMPING BRACKETS
3. [illegible] BE OF EQUAL SIZE AND MATERIAL AS THE [illegible] SEWER.
4. THE CITY SHALL APPROVE ALL [illegible] WATERTIGHT CONNECTION DETAILS FOR CONNECTIONS OF 24" DIAMETER [illegible]S AND LARGER.
5. AN INSIDE DROP CONNECTION SHALL BE REQUIRED FOR ALL INFLUENT WHICH HAVE AN INVERT 24" OR MORE ABOVE THE OUTFLOW PIPE INVERT.
6. [illegible] MINIMUM OF 3000 SI.

## MANHOLE CONNECTION DETAILS

| CITY OF APOPKA DESIGN ENGINEERING DIVISION | JANUARY 2014 | FIG. 201 |
|---|---|---|

KENNETH H. EHLERS LICENSED NO. 18243 STATE OF FLORIDA PROFESSIONAL ENGINEER

9 3 0 19
K Ehlers



PLAN NOTES

# CITY OF APOPKA DETAILS

AUTO BASE INC.
651 MARSHALL LAKE ROAD
APOPKA, FLORIDA 32703

| NO. | REVISION/ISSUE | DATE |
|---|---|---|
| | | |
| | | |
| | | |

ENGINEER OF RECORD
KEN EHLERS, P.E.
FLORIDA P.E. LICENSE NO. 18243
PROFESSIONAL ENGINEERING SERVICES
6034 FALCONBRIDGE PLACE
MOUNT DORA, FL 32757
CELL PHONE: (407) 448-3412

PROJECT NAME
AUTO BASE INC.
LOT #3

| DWG SHEETS 1-11 | SHEET |
|---|---|
| DATE AUGUST 29, 2019 | 4 |
| SCALE AS SHOWN | |

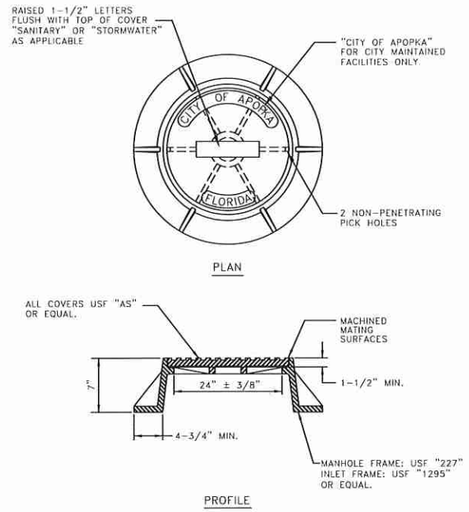


NOTES:

1. MANHOLE FRAME AND COVER ARE TO BE TRAFIC BEARING RATED H-20, CLASS 30 MEETING ASTM A 48.

## STANDARD MANHOLE FRAME AND COVER

| CITY OF APOPKA DESIGN ENGINEERING DIVISION | JANUARY 2014 | FIG. 202 |
|---|---|---|

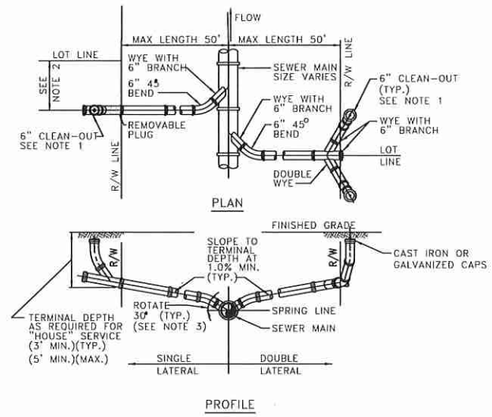


NOTES:

1. CLEAN-OUT (SHOWN SHADED) SHALL BE INSTALLED BY THE BUILDER IN ACCORDANCE WITH STANDARD PLUMBING CODE.
2. LOCATE SINGLE LATERAL AS CLOSE TO LOT LINE AS POSSIBLE.
3. INVERT OF SERVICE LATERAL SHALL NOT ENTER SEWER MAIN BELOW SPRING LINE.
4. RESIDENTIAL SERVICES SHALL BE 4 INCHES & NON-RESIDENTIAL SERVICES SHALL BE 6 INCHES IN DIAMETER AS A MINIMUM.
5. GALVANIZED, OR CAST IRON CLEAN-OUT CAP SHALL BE USED ON THE STUBOUT FOR EACH SERVICE.
6. LATERAL SHALL BE MARKED WITH AN "S" STAMPED OR CUT IN THE CURB.

## SERVICE LATERAL DETAIL

| CITY OF APOPKA DESIGN ENGINEERING DIVISION | JANUARY 2014 | FIG. 204 |
|---|---|---|

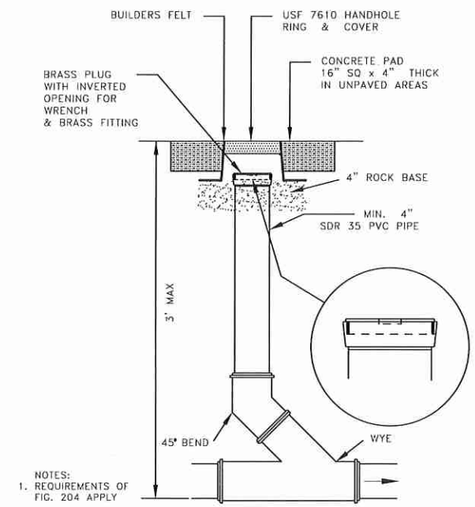


NOTES:

1. REQUIREMENTS OF FIG. 204 APPLY

## SANITARY SEWER SERVICE TRAFFIC RATED CLEAN-OUT DETAIL

NTS

| CITY OF APOPKA DESIGN ENGINEERING DIVISION | JANUARY 2014 | FIG. 205 |
|---|---|---|

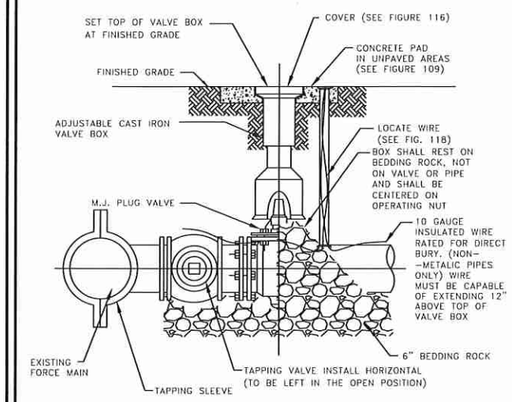


## FORCE MAIN WET TAP TIE-IN DETAIL

| CITY OF APOPKA DESIGN ENGINEERING DIVISION | JANUARY 2014 | FIG. 206 |
|---|---|---|

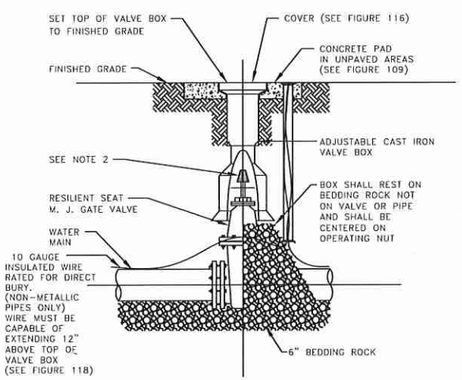


NOTES:

1. PVC EXTENSIONS MAY BE USED ON VALVE BOX INSTALLATION.
2. THE ACTUATING NUT FOR DEEPER VALVES SHALL BE EXTENDED TO WITHIN A 3 FEET BELOW FINISHED GRADE.

## GATE VALVE AND BOX DETAIL

| CITY OF APOPKA DESIGN ENGINEERING DIVISION | JANUARY 2014 | FIG. 400 |
|---|---|---|

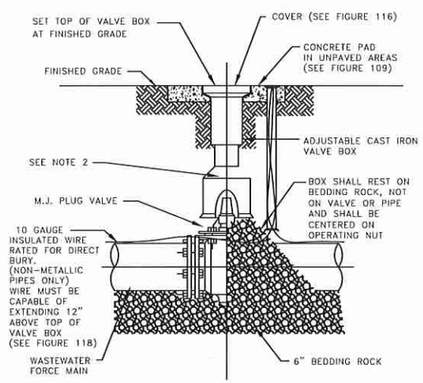


NOTES:

1. PVC EXTENSIONS MAY BE USED ON VALVE BOX INSTALLATION.
2. THE ACTUATING NUT FOR DEEPER VALVES SHALL BE EXTENDED TO WITHIN 3 FEET BELOW FINISHED GRADE.

## PLUG VALVE AND BOX DETAIL

| CITY OF APOPKA DESIGN ENGINEERING DIVISION | JANUARY 2014 | FIG. 400 A |
|---|---|---|

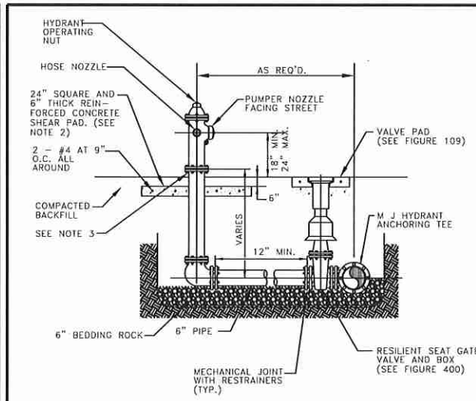


NOTES:

1. FIRE HYDRANT SHALL BE SUPPLIED WITHOUT A WEEP HOLE, OR WITH A PERMANENTLY PLUGGED WEEP HOLE.
2. THE SHEAR PAD SHALL BE RECESSED SIX (6) INCHES BELOW THE FINISHED GRADE AND THE RECESSED SECTION SODDED.
3. CLEARANCE BETWEEN BOTTOM OF BOLTS AND TOP OF SHEAR PAD SHALL BE A TWELVE (12) INCH MINIMUM.
4. FIRE HYDRANTS SHALL BE IDENTIFIED IN ACCORDANCE WITH THE CITY OF APOPKA CONSTRUCTION DESIGN STANDARDS MANUAL.

## FIRE HYDRANT ASSEMBLY DETAIL

| CITY OF APOPKA DESIGN ENGINEERING DIVISION | JANUARY 2014 | FIG. 402 |
|---|---|---|

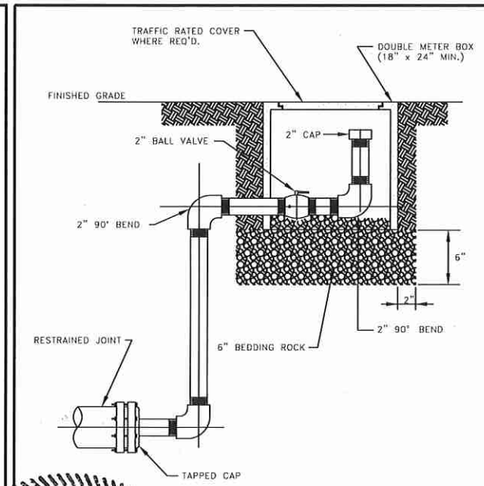


NOTES:

1. ALL 2 INCH PIPE AND FITTINGS SHALL BE SCHEDULE 40 GALVANIZED STEEL OR BRASS WITH THREADED (NPT) JOINTS. USE TEFLON TAPE ON JOINTS.
2. COLOR SHALL BE APPROPRIATE FOR USE.

## BLOWOFF VALVE DETAIL

| CITY OF APOPKA DESIGN ENGINEERING DIVISION | JANUARY 2014 | FIG. 403 |
|---|---|---|

KENNETH H. EHLERS LICENSE NO. 18243 STATE OF FLORIDA PROFESSIONAL ENGINEER

9/30/19

K Ehlers



PLAN NOTES

# CITY OF APOPKA DETAILS

AUTO BASE INC.
651 MARSHALL LAKE ROAD
APOPKA, FLORIDA 32703

| NO. | REVISION/ISSUE | DATE |
|---|---|---|
| | | |
| | | |
| | | |

ENGINEER OF RECORD
KEN EHLERS, P.E.
FLORIDA P.E. LICENSE NO. 18243
PROFESSIONAL ENGINEERING SERVICES
6034 FALCONBRIDGE PLACE
MOUNT DORA, FL 32757
CELL PHONE: (407) 448-3412

PROJECT NAME

AUTO BASE INC.

LOT #3

| DWG SHEETS 1-11 | SHEET |
|---|---|
| DATE AUGUST 29, 2019 | 5 |
| SCALE AS SHOWN | |

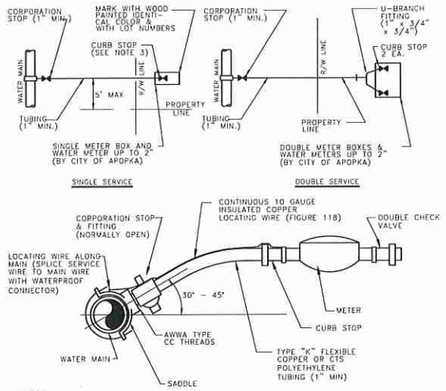


NOTES:

1. ALL FITTINGS SHALL BE BRASS WITH COMPRESSION/PACK JOINT TYPE CONNECTIONS.
2. NO SERVICE LINE SHALL TERMINATE UNDER A DRIVEWAY.
3. EACH SERVICE SHALL TERMINATE AT A CURB STOP(S) WHICH SHALL BE BURIED APPROXIMATELY 3" BELOW FINAL GRADE AND SHALL BE CLEARLY MARKED WITH A 2" x 2" x 18" STAKE WITH THE TOP PAINTED BLUE FOR POTABLE WATER AND PURPLE FOR RECLAIMED WATER, AND MARKED WITH THE NUMBER OF THE LOT(S) TO BE SERVED.
4. RECLAIMED WATER SERVICES SHALL USE PURPLE COLORED CTS POLYETHYLENE TUBING.
5. POTABLE WATER SERVICES SHALL USE BLUE COLORED CTS POLYETHYLENE TUBING.
6. ALL SERVICE UNDER EXISTING OR PROPOSED PAVEMENT SHALL BE INSTALLED IN A MINIMUM 2" PVC SLEEVE.

## WATER SERVICE CONNECTION DETAIL

| CITY OF APOPKA DESIGN ENGINEERING DIVISION | JANUARY 2014 | FIG. 405 |
|---|---|---|

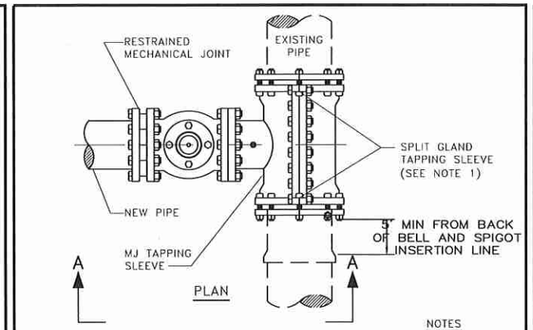


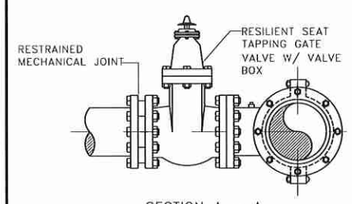


SECTION A – A

NOTES

1. SIZE ON SIZE WET TAPS WILL CALL FOR FULL ENCIRCLEMENT STAINLESS STEEL MJ TAPPING SLEEVE; MUELLER H-304, OR EQUAL.
2. ALL NEWLY INSTALLED TAPPING SLEEVES & TAPPING VALVES SHALL BE PNEUMATICALLY TESTED AT A TEST PRESSURE OF 150PSI FOR A PERIOD OF THIRTY MINUTES.

## WATER AND RECLAIMED WATER MAINS WET TAP TIE-IN DETAIL

| CITY OF APOPKA DESIGN ENGINEERING DIVISION | JANUARY 2014 | FIG. 406 |
|---|---|---|

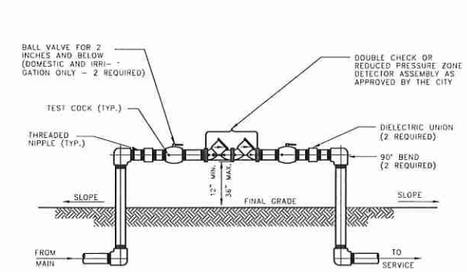


NOTES:

1. ALL PIPE FITTINGS, MATERIALS, LABOR, AND APPURTENANCES SHALL BE SUPPLIED BY THE CONTRACTOR.
2. ALL PIPE AND FITTINGS TWO (2) INCHES AND SMALLER SHALL BE THREADED SCHEDULE 40 GALVANIZED STEEL.

## DOUBLE CHECK OR REDUCED PRESSURE ZONE DETECTOR ASSEMBLY

2 INCH AND BELOW ASSEMBLY

| CITY OF APOPKA DESIGN ENGINEERING DIVISION | JANUARY 2014 | FIG. 500 A |
|---|---|---|

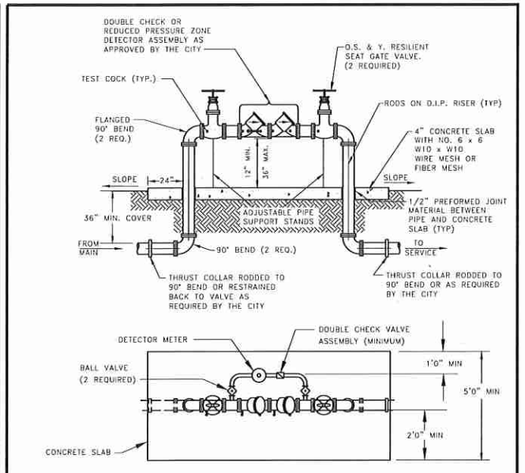


NOTES:
1. BYPASS METER MUST MEET AWWA STANDARD C700 OR C701.
2. METER MUST MEET AWWA STANDARD C707 AND TRANSMITTER MUST BE COMPATIBLE WITH THE CITY'S AMR SYSTEM.
3. ALL PIPE FITTINGS, MATERIALS, LABOR, AND APPURTENANCES SHALL BE SUPPLIED BY THE CONTRACTOR.
4. ALL PIPE AND FITTINGS TWO (2) INCHES AND SMALLER SHALL BE THREADED SCHEDULE 40 GALVANIZED STEEL, OR BRASS.

## ABOVE GROUND DEVICE WITH DETECTOR BY-PASS

2 INCH AND ABOVE ASSEMBLY

| CITY OF APOPKA DESIGN ENGINEERING DIVISION | JANUARY 2014 | FIG. 500 B |
|---|---|---|

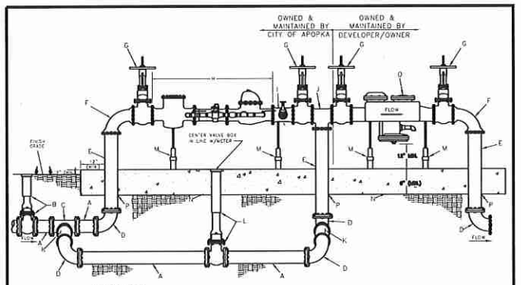


MATERIAL LIST

A DUCTILE IRON PIPE (VARIOUS LENGTHS)
B M.J. GATE VALVE W/VALVE BOX (SLIDE STYLE) MEGALUG JOINT RESTRAINTS
C M.J. TEE MEGALUG JOINT RESTRAINTS
D M.J. ELL MEGALUG JOINT RESTRAINTS
E DUCTILE IRON FLANGED PIPE
F FLANGED ELL (LONG RADIUS)
G FLANGED O.S. & Y VALVE
H DUAL RANGE METER
I (SIZE") x 4" FLANGED TEE
4" x 2" TAPPED FLANGE
2" x 2 1/2" BRASS NIPPLE
2" GATE SCREW VALVE
2" GALVANIZED PLUG
J FLANGED TEE
K (SIZE") x 10" D.I. PIPE STUB M.J. GATE VALVE W/VALVE BOX (SLIDE STYLE) & VALVE NUT LOCKING CAP MEGALUG JOINT RESTRAINTS (VALVE NUT LOCKING CAP PROVIDED BY OUC)
M ADJUSTABLE BRACE (AS NEEDED)
N 3000 PSI CONC. W/8X6 WWF (6' WIDE x 6" THICK MINIMUM) BY DEVELOPER
O CITY OF APOPKA APPROVED REDUCED PRESSURE BACKFLOW PREVENTER
Q ALL FLANGES: PIPES, VALVES AND APPURTENSES SHALL HAVE 316 S.S. HARDWARE

NOTES:

1. THE METER ASSEMBLY TO BE INSTALLED ON PRIVATE PROPERTY.
2. PROVIDE A MINIMUM 10 FT. EASEMENT ON EACH SIDE OF THE METER ASSEMBLY TO THE CITY OF APOPKA FOR OPERATION AND MAINTENANCE OF THE METER ASSEMBLY.
3. DEVELOPER INSTALL: OWNER/DEVELOPER WILL BE RESPONSIBLE FOR THE INSTALLATION OF THIS FIRE LINE MASTER METER ASSEMBLY UNDER THE INSPECTION OF CITY OF APOPKA PERSONNEL.
4. THE BACKFLOW PREVENTION DEVICE TO BE FURNISHED,INSTALLED AND MAINTAINED BY THE OWNER/DEVELOPER.THE BACKFLOW PREVENTION DEVICE WILL BE TESTED BY CERTIFIED BACKFLOW PREVENTION DEVICE TESTER AFTER INSTALLATION. A COPY OF THE TEST RESULTS WILL BE PROVIDED TO THE CITY OF APOPKA PUBLIC SERVICES DEPARTMENT.THE BACKFLOW PREVENTION DEVICE WILL NEED TO BE AN AMERICAN WATER WORKS ASSOCIATION (AWWA) APPROVED DEVICE.
5. THE METER ASSEMBLY WILL BE OWNED AND MAINTAINED BY THE CITY OF APOPKA.BOTH METERS WITHIN THE MASTER ASSEMBLY WILL NEED TO BE COMPATIBLE WITH THE CITY'S AUTOMATIC METER READING (AMR) SYSTEM. THE CITY'S AMR SYSTEM IS MANUFACTURED BY SENSUS METERING SYSTEMS,INC.

CONSTRUCTION NOTES:

6. PIPE, FITTINGS AND VALVE SIZES DETERMINED BY LARGE METER SIZE.

4"X1.5" DRM W/4" BY-PASS
6"X2" DRM W/6" BY-PASS
8"X2" DRM W/8" BY-PASS
10"X2" DRM W/10" BY-PASS.

MINIMUM SERVICE VALVE SIZE DETERMINED BY LARGE METER SIZE.

## FIRE LINE MASTER METER ASSEMBLY W/ BY-PASS (TYPICAL)

| CITY OF APOPKA DESIGN ENGINEERING DIVISION | JANUARY 2014 | FIG. 500 C |
|---|---|---|

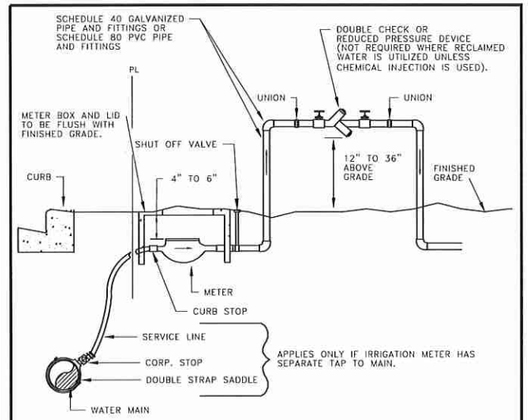


NOTES:

1. A POSITIVE DIELECTRIC CONNECTION SHALL BE MADE BETWEEN ALL GALVANIZED AND BRASS COMPONENTS.
2. METER SHALL BE INSTALLED JUST INSIDE THE ROW LINE OR PROPERTY LINE AND IN NO CASE SHALL IT BE INSTALLED IN THE SIDEWALK OR OTHER PAVED AREAS.
3. DOUBLE CHECK VALVES MAY BE USED AS LONG AS THEIR ARE NO CHEMICALS OR A WELL ON SITE.
4. A PVB DEVICE SHALL BE 12-INCHES MINIMUM ABOVE HIGHEST OUTLET OR SPRAYHEAD
5. ALL BACKFLOW PREVENTION DEVICES ARE TO BE AWWA APPROVED.

## IRRIGATION METER AND DOUBLE CHECK VALVE OR REDUCED PRESSURE BACKFLOW PREVENTER

| CITY OF APOPKA DESIGN ENGINEERING DIVISION | JANUARY 2014 | FIG. 502 |
|---|---|---|

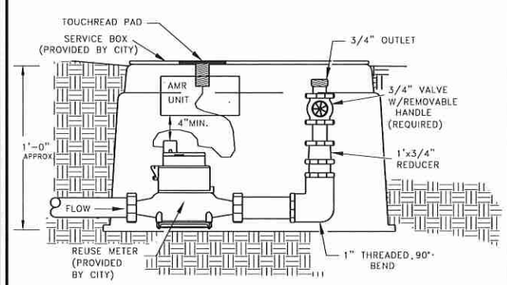


## RECLAIMED WATER SERVICE CONNECTION

(FOR SERVICES W/O AN IRRIGATION SYSTEM)

| CITY OF APOPKA DESIGN ENGINEERING DIVISION | JANUARY 2014 | FIG. 506 |
|---|---|---|

GATE: DECORATIVE METAL DOUBLE GATE (6'Hx10'W), WITH 180° SWING HINGE.

WALLS: 6' HIGH, DUMPSTER SCREENING ENCLOSURES TO BE CONSTRUCTED OF CONCRETE BLOCK WITH EXTERIOR FINISH BEING BRICK OR STONE CAP BLOCK ON WALL. ANY VARIATION OF THE ABOVE MUST BE APPROVED BY COMMUNITY DEVELOPMENT DIRECTOR.

BOLLARDS: TO BE PLACED 10" FROM WALL AND TO BE YELLOW PAINTED.

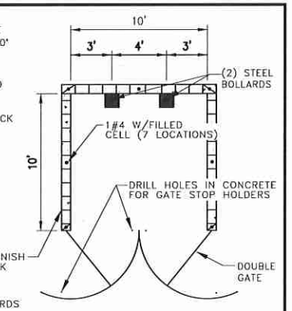


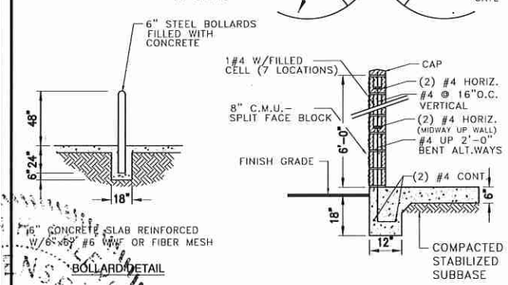


## DUMPSTER ENCLOSURE DETAIL

NTS

| CITY OF APOPKA DESIGN ENGINEERING DIVISION | JANUARY 2014 | FIG. 601 |
|---|---|---|

KENNETH EHLERS LICENSED PROFESSIONAL ENGINEER NO. 5243 STATE OF FLORIDA

9/3/19
P Ehlers



PLAN NOTES

# CITY OF APOPKA DETAILS

AUTO BASE INC.
651 MARSHALL LAKE ROAD
APOPKA, FLORIDA 32703

| NO. | REVISION/ISSUE | DATE |
|---|---|---|
| | | |
| | | |
| | | |

ENGINEER OF RECORD
KEN EHLERS, P.E.
FLORIDA P.E. LICENSE NO. 18243
PROFESSIONAL ENGINEERING SERVICES
6034 FALCONBRIDGE PLACE
MOUNT DORA, FL 32757
CELL PHONE: (407) 448-3412

PROJECT NAME

AUTO BASE INC.

LOT #3

| DWG SHEETS 1-11 | SHEET |
|---|---|
| DATE AUGUST 29, 2019 | 6 |
| SCALE AS SHOWN | |

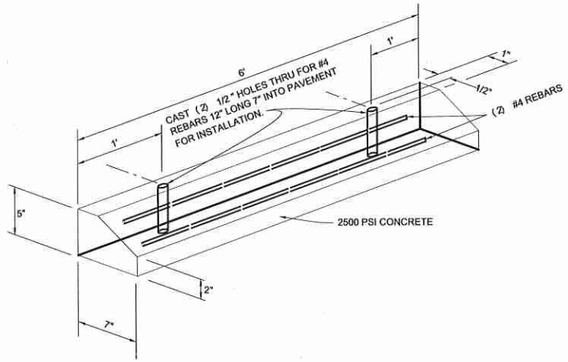


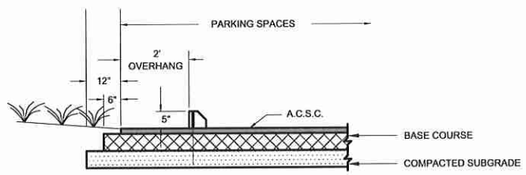


## WHEEL STOP DETAIL

N.T.S.

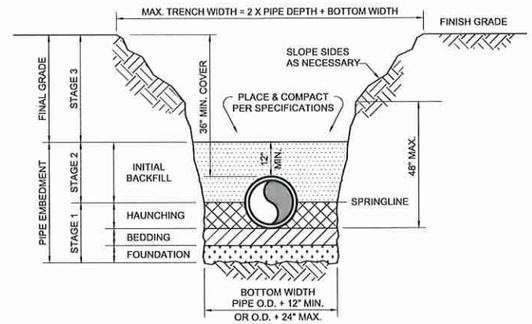


NOTES:

1. DEPTH OF PIPE MAY BE FIELD ADJUSTED TO MEET SPECIAL CONDITIONS AS DETERMINED BY THE OWNER'S REPRESENTATIVE.
2. ALL TRENCHING SHALL COMPLY WITH THE REQUIREMENTS OF THE FLORIDA TRENCH SAFETY ACT.
3. FOUNDATION: A FOUNDATION MAY BE REQUIRED IN POOR SOIL CONDITIONS.
4. BEDDING: BEDDING IS REQUIRED PRIMARILY TO BRING THE TRENCH BOTTOM UP TO GRADE AND ADJUST FOR PIPE BELLS. BEDDING MATERIALS SHALL PROVIDE A UNIFORM AND ADEQUATE LONGITUDINAL SUPPORT UNDER THE PIPE. MATERIAL SHALL BE PLACED IN 4" TO 6" LIFTS, LIGHTLY COMPACTED, UNIFORM AND NOT FINER THAN THE FOUNDATION MATERIAL.
5. HAUNCHING: HAUNCHING MATERIAL SHALL BE HAND PLACED TO THE SPRINGLINE OF THE PIPE. MATERIAL SHALL BE CONSOLIDATED UNDER THE PIPE AND HAND TAMPED TO PROVIDE ADEQUATE SIDE SUPPORT.
6. INITIAL BACKFILL: INITIAL BACKFILL SHALL BE HAND PLACED TO 12" ABOVE THE TOP OF THE PIPE. THE SOIL SHALL BE CONSOLIDATED BY HAND TAMPING OR WALKING THE SOIL IN PLACE.
7. FINAL BACKFILL: FINAL BACKFILL MATERIAL MAY BE MACHINE PLACED. MATERIAL UNDER ROADWAYS MAY REQUIRE SPECIAL COMPACTION AND DENSITY TESTS.
8. DENSITY: ALL BACKFILL SHALL BE COMPACTED TO THE REQUIREMENTS OF THE SPECIFICATIONS.

## TYPICAL TRENCHING AND BACKFILLING

N.T.S.

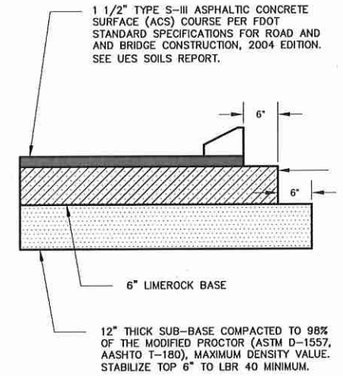


## TYPICAL PAVEMENT SECTION

N.T.S.

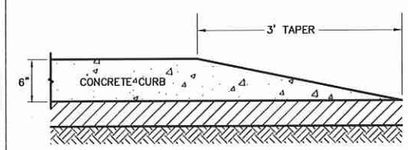


## CONCRETE CURB TAPER

N.T.S.

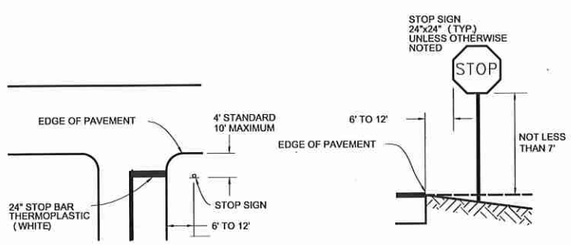


PLAN

STOP SIGN DETAIL

BLADES: ALCOA #86054, 6063-T6 ALLOY, ETCHED, DEGREASED, DEBURRED, WITH #1200 ALODINE FINISH, #2277 GREEN SCOTCHLITE BACKGROUND OR EQUAL. DIMENSIONS-6"HEIGHT;24",30"or36"LENGTHS.

LETTERS: NAME - 4" SERIES "B" #2270 SCOTCHLITE (SILVER) OR EQUAL. SUFFIX-2"SERIES"B"#2270SCOTCHLITE (SILVER) OREQUAL.

BRACKETS: DIE-CAST HIGH STRENGTH ALUMINUM ALLOY, MIN. TENSILE STRENGTH 45,000 P.S.I., DEGREASED, TUMBLED, AND POLISHED, SIDES OF ALL SLOTS SHALL BE SOLID METAL WITH TWO HOLES PER SLOT (SAME SIDE) DRILLED TO 7/32" AND TAPPED TO 1/4" TO RECEIVE STAINLESS STEEL ALLEN-HEAD SET SCREWS, SKIRT OF POST CAP BRACKET TO BE DRILLED AND TAPPED FOR 3 SCREWS OF WHICH NO TWO SCREWS ARE TO BE LESS THAN 90 OR MORE THAN 135 APART. (METRO HUSKEY No. 6 or EQUAL)

POST: STANDARD 2" I.D. (2 3/8" O.D.) 14' LONG GALVANIZED STEEL, "GLOSS" DIPPED.

CONCRETE BASE: 2000#

## STOP SIGN AND BAR LOCATION

N.T.S.

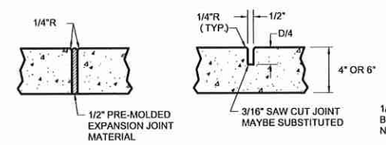


EXPANSION JOINTS

CONTRACTION JOINTS

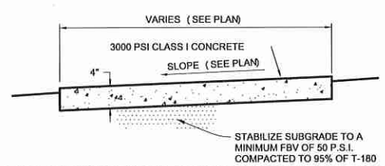


TYPICAL SECTION OF 4" THICK CONCRETE SIDEWALK

N.T.S.

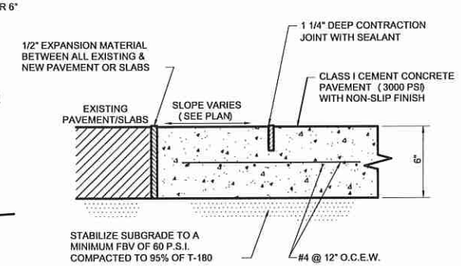


TYPICAL SECTION OF 6" THICK CONCRETE SIDEWALK

N.T.S.

NOTES:

1. ALL MATERIALS AND CONSTRUCTION SHALL BE IN ACCORDANCE WITH FDOT SPECIFICATIONS SECTIONS 345 & 350.
2. ALL TESTING SHALL BE IN ACCORDANCE WITH FDOT SPECIFICATIONS SECTION 345-8 FOR 28 DAY COMPRESSIVE STRENGTH 3000 PSI CONCRETE.
3. PROVIDE EXPANSION JOINTS 20' CENTER TO CENTER, AT PC & PT OF CURVES, JUNCTIONS OF EXISTING AND NEW SIDEWALKS, AND WHERE SIDEWALK ABUTS CURBS, DRIVEWAYS & SIMILAR STRUCTURES.
4. PROVIDE CONTRACTIONS JOINTS 5' CENTER TO CENTER.
5. SOD SHALL BE PLACED BELOW EDGE OF SIDEWALK TO ALLOW DRAINAGE.

## CONCRETE SIDEWALK SECTIONS

N.T.S.

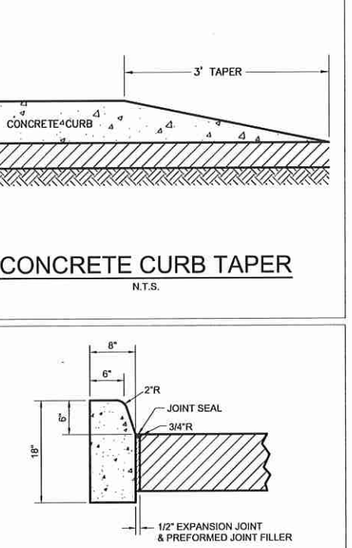


SECTION VIEW

NOTES:

SAW CUT CONTRACTION JOINTS ON 10' CENTERS MAX. WITHIN 48 HOURS AFTER POURING CURB.

ALL MATERIALS AND CONSTRUCTION SHALL BE IN ACCORDANCE WITH FDOT SPECIFICATIONS SECTION 520 AND FDOT ROADWAY & TRAFFIC DESIGN STANDARDS INDEX NUMBER 300.

## TYPE "D" CURB

N.T.S.

KENNETH H. EHLERS LICENSE NO. 18243 STATE OF FLORIDA PROFESSIONAL ENGINEER

48 HOURS BEFORE DIGGING
CALL TOLL FREE
1-800-432-4770
SUNSHINE STATE ONE CALL OF FLORIDA, INC.

9/30/19

KENNETH H. EHLERS, FL PE #18243

PLAN NOTES

# STANDARD DETAILS

AUTO BASE INC.
651 MARSHALL LAKE ROAD
APOPKA, FLORIDA 32703

| NO. | REVISION/ISSUE | DATE |
|---|---|---|
| | | |
| | | |
| | | |


ENGINEER OF RECORD
KEN EHLERS, P.E.
FLORIDA P.E. LICENSE NO. 18243
PROFESSIONAL ENGINEERING SERVICES
6034 FALCONBRIDGE PLACE
MOUNT DORA, FL 32757
CELL PHONE: (407) 448-3412


PROJECT NAME

AUTO BASE INC.

LOT #3

| DWG SHEETS 1-11 | SHEET |
|---|---|
| DATE AUGUST 29, 2019 | 7 |
| SCALE AS SHOWN | |

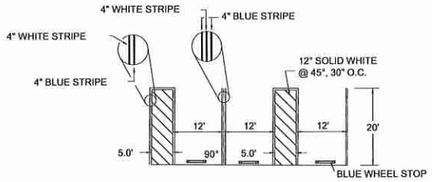


NOTES: HANDICAP SPACE IS TO BE OUTLINED IN A 4" BLUE PAINTED STRIPE.

## TYPICAL DISABLED PARKING SECTION

N.T.S.

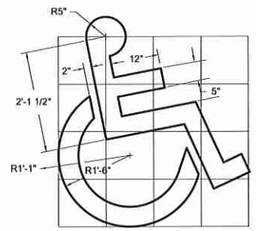


## HANDICAP SYMBOL DETAIL

N.T.S.

## HANDICAP PARKING SIGN

N.T.S.

NOTES:

1. ALL LETTERS ARE 1" SERIES "C", PER MUTCD.
2. TOP PORTION OF SIGN SHALL HAVE REFLECTORIZED (ENGINEERING GRADE) BLUE.
3. BOTTOM PORTION OF SIGN SHALL HAVE A REFLECTORIZED (ENGINEERING GRADE) BACKGROUND WITH WHITE REFLECTORIZED LEGEND AND BORDER.
4. ONE (1) SIGN IS REQUIRED FOR EACH PARKING SPACE.
5. HEIGHT OF SIGN SHALL BE 7'-6" FROM FINISHED GROUND TO BOTTOM OF SIGN. WHITE BACKGROUND WITH BLACK OPAQUE LEGEND AND BORDER.
6. USE FTP 20-06 AND FTP 22-06 AS PER 2016 FDOT STANDARD INDEX 17355. REFER TO PLAN SHEET 16 FOR FDOT DETAILS.

## DISABLED PARKING DETAILS

N.T.S.

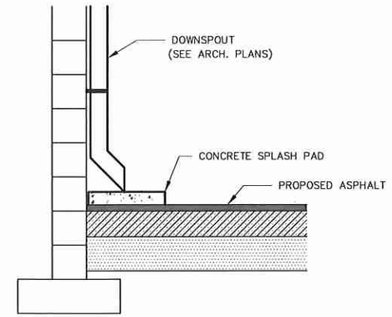


## DOWN SPOUT DETAIL

N.T.S.

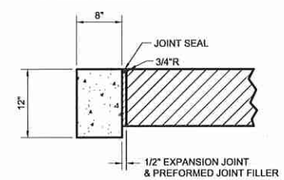


## SECTION VIEW

NOTES:
SAW CUT CONTRACTION JOINTS ON 10' CENTERS MAX. WITHIN 48 HOURS AFTER POURING CURB. ALL MATERIALS AND CONSTRUCTION SHALL BE IN ACCORDANCE WITH FDOT SPECIFICATIONS SECTION 520 AND FDOT ROADWAY & TRAFFIC DESIGN STANDARDS INDEX NUMBER 300.

## FLUSH CURB

N.T.S.

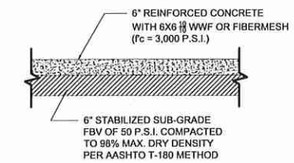


## CONCRETE SECTION

N.T.S.

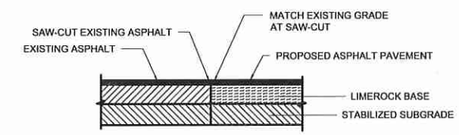


STRUCTURAL COURSE:
TYPE S-1 ASPHALTIC CONCRETE: 1 ½" THICKNESS

BASE:
COMPACTED LIMEROCK: 6" THICKNESS, PRIMED.
MINIMUM LBR OF 100 COMPACTED TO 98 PROCTOR.

SUBGRADE:
12" THICKNESS STABILIZED, MINIMUM LBR 40 PER STANDARD SPECIFICATIONS, SECTION 160-2.

## PAVEMENT SAW-CUT AND BUTT JOINT

N.T.S.

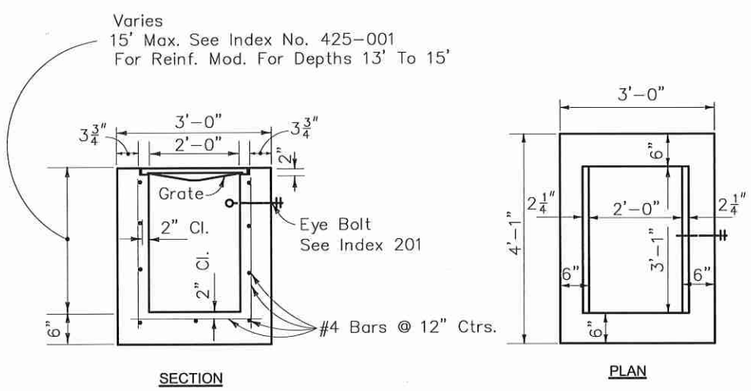


Recommended Maximum Pipe Size:
2'-0" Wall-18" Pipe
3'-1" Wall-24" Pipe

## PRE-CAST TYPE "C" CATCH BASIN FDOT INDEX 425-052

N.T.S.

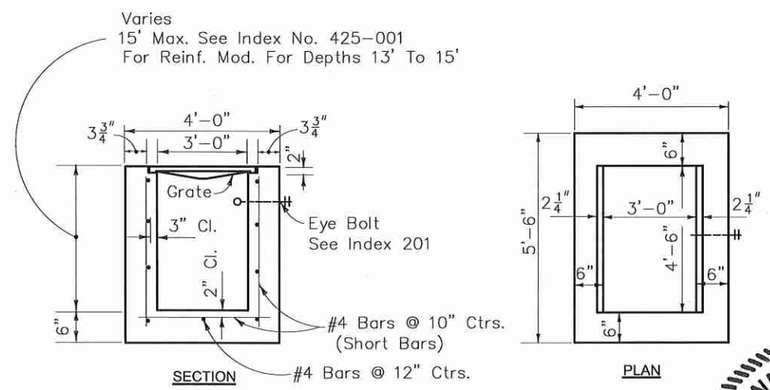


Recommended Maximum Pipe Size:
3'-0" Wall-24" Pipe
4'-6" Wall-36" Pipe

## PRE-CAST TYPE "E" CATCH BASIN FDOT INDEX 425-052

N.T.S.

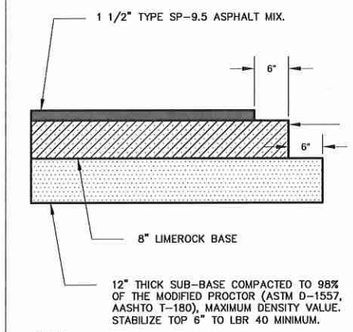


## TYPICAL RIGHT-OF-WAY PAVEMENT SECTION

N.T.S.

KENNETH H. EHLERS
LICENSED
NO. 18243
STATE OF FLORIDA
PROFESSIONAL ENGINEER

48 HOURS BEFORE DIGGING
CALL TOLL FREE
1-800-432-4770
SUNSHINE STATE ONE CALL OF FLORIDA, INC.

9/3/19

K Ehlers

KENNETH H. EHLERS, FL PE #18243

PLAN NOTES

# DRAINAGE DETAILS

AUTO BASE INC.
651 MARSHALL LAKE ROAD
APOPKA, FLORIDA 32703

| NO. | REVISION/ISSUE | DATE |
|---|---|---|
| | | |
| | | |
| | | |

ENGINEER OF RECORD
KEN EHLERS, P.E.
FLORIDA P.E. LICENSE NO. 18243
PROFESSIONAL ENGINEERING SERVICES
6034 FALCONBRIDGE PLACE
MOUNT DORA, FL 32757
CELL PHONE: (407) 448-3412

PROJECT NAME
AUTO BASE INC.
LOT #3

| DWG SHEETS 1-11 | SHEET |
|---|---|
| DATE AUGUST 29, 2019 | 8 |
| SCALE AS SHOWN | |

SPECIFIED PLANTING MIX
WATER & TAMP TO
REMOVE AIR POCKETS

SHRUB PLANTING

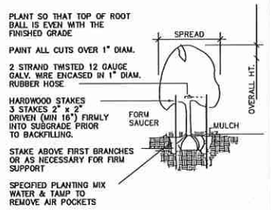


TREE PLANTING VERTICAL STAKES

STAKE TO FIRST BRANCHES AS NECESSARY FOR FIRM SUPPORT

WIRE SHALL NOT TOUCH OR RUB ADJACENT TRUNKS or BRANCHES

2" x 2" HARDWOOD STAKES DRIVEN FIRMLY A MINIMUM OF 18" INTO THE SUBGRADE PRIOR TO BACKFILLING.

2 STRAND 12 GAUGE GALV. WIRE TWISTED AND ENCASED IN RUBBER HOSE 6 – 9" FROM TOP OF STAKE
2 WIRE SUPPORTS SHALL BE USED ON MAIN STRUCTURAL BRANCHES

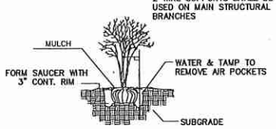


SEE GENERAL NOTES ON
SOIL PREPARATION

MULTI–TRUNK TREE STAKES

GRAPHIC SCALE

0' 10' 20' 40' 60'

1" = 20'

## LANDSCAPE NOTES

1. SHADE TREE REQUIREMENTS SHALL COMPLY WITH CITY OF APOPKA CODE WHEREBY ALL TREES PLANTED MUST MEET OR EXCEED FLORIDA NO. 1, AS ESTABLISHED IN THE LATEST PUBLICATION BY THE STATE OF FLORIDA DEPT. OF AGRICULTURE, GRADES AND STANDARDS FOR NURSERY PLANT MATERIAL.
2. IRRIGATION (100% COVERAGE) SHALL BE PROVIDED IN ALL NEWLY PROPOSED PLANTING AREAS IN ACCORDANCE WITH CITY OF APOPKA LAND DEVELOPMENT CODE.
3. IN THE EVENT OF DISCREPANCY BETWEEN THE PLANT LIST AND ACTUAL NUMBER OF PLANTS SHOWN ON THE PLAN, THE PLAN SHALL CONTROL. THE LANDSCAPE CONTRACTOR SHALL NOTIFY THE LANDSCAPE ARCHITECT OF ANY DISCREPANCIES PRIOR TO ISSUANCE OF BIDS.
4. ALL PLANTING BEDS AND TREE SAUCERS TO HAVE ORGANIC MULCH TO A DEPTH OF 3" MIN.
5. CALIPER OF TREES SHALL BE MEASURED AT 54" DBH ABOVE BASE OF TREE. ALL TREES SHALL BE INSTALLED A TWELVE MONTH WARRANTY IS TO BE PROVIDED FOR ALL NEW PLANT MATERIAL STARTING FROM TIME OF FINAL ACCEPTANCE BY OWNER. REPLACEMENT OF DEAD OR UNHEALTHY MATERIALS SHALL BE THE RESPONSIBILITY OF THE LANDSCAPE CONTRACTOR WITHIN THIRTY DAYS OF NOTIFICATION IN CONFORMANCE WITH THE APPROVED LANDSCAPE PLAN.
6. IN AN UPRIGHT POSITION. CALIPER OF TREES SHALL TAKE PRECEDENCE OVER HEIGHT OR SPREAD.
7. ALL DISTURBED AREAS WITHIN PROJECT LIMITS SHALL BE FULLY SODDED ASIDE FROM DEFINED PLANTING BEDS. SOD SHALL BE FREE OF WEEDS AND NOXIOUS PESTS OR DISEASES.
8. LANDSCAPE CONTRACTOR SHALL BE RESPONSIBLE FOR ANY DAMAGE OCCURRING ON SITE OR ADJACENT AREAS, INCLUDING BUT NOT LIMITED TO BUILDINGS, PAVING, UTILITIES, ETC., WHICH IS CAUSED BY PREPARING OR INSTALLING ANY AND ALL PLANT MATERIAL.
9. LANDSCAPING SHOWN ON THIS PLAN SHALL BE MAINTAINED IN COMPLIANCE WITH LOCAL LANDSCAPING ORDINANCE.
10. GRADE, DRESS, AND SOD AREAS THAT HAVE BEEN DISTURBED AS SOON AS POSSIBLE TO PREVENT EROSION.
11. PLANT MIX OF 8" SHALL BE TILLED INTO EXISTING SOIL TO A DEPTH OF 24". REFER TO SHRUB AND TREE PLANTING DETAIL FOR EXTENT OF PLANT MIX TO BE PROVIDED. PLANT MIX SHALL CONSIST OF 1/3 PEAT MOSS AND 2/3 EXISTING SOIL.
12. ALL PLANT MATERIALS SHALL RECEIVE A SLOW RELEASE FERTILIZER IN QUANTITIES AS DIRECTED BY THE MANUFACTURER.
13. ALL PLANT MATERIAL SHALL BE SET BACK 2 FEET FROM THE BACK OF CURBS OR PAVEMENT. SET TREES 3 FEET BACK FROM CURB.
14. PIN ALL SOD ON 3:1 OR GREATER SLOPES.
15. GENERAL CONTRACTOR SHALL BE RESPONSIBLE FOR DETERMINING IF THERE ARE ANY INVASIVE OR EXOTIC TREES LOCATED ON THE SITE AND IS REQUIRED TO REMOVE ALL INVASIVE SPECIES PER THE LOCAL JURISDICTION INVASIVE SPECIES LIST LOCATED IN THEIR CODE OF ORDINANCES.
16. PLANT SIZES SHOWN ON THE PLANT LIST ARE ABSOLUTE MINIMUMS. WHEN MORE THAN ONE SIZE CRITERIA ARE LISTED THEN THE PLANT MATERIAL SHALL COMPLY WITH EACH OF THE CRITERIA, NOT JUST ONE. THESE ARE GENERALLY MINIMUMS DICTATED BY THE JURISDICTION. DIFFERENT PLANTS GROW AT DIFFERENT RATES BUT ALL MINIMUMS MUST BE MET.
17. WHEN THERE ARE EXISTING TREES OR VEGETATION TO REMAIN, CONTRACTOR SHALL EMPLOY A CERTIFIED TREE SURGEON TO PRUNE AND TRIM ALL EXISTING PLANT MATERIALS TO PROVIDE A BALANCED APPEARANCE WHILE ALSO ELIMINATING ANY INTERFERENCE WITH NEW CONSTRUCTION.
18. ALL EQUIPMENT (INCLUDING ROOF TOP) AND UTILITY BOXES MUST BE FULLY SCREENED (INCLUDING THE BACK OF THE BUILDING).
19. LANDSCAPE INSTALLER TO INSURE THAT ALL EQUIPMENT IS SCREENED AS REQUIRED BUT ALSO INSURE THAT ALL CLEANOUTS AND TEST PORTS HAVE UNOBSTRUCTED ACCESS.

## LANDSCAPE SCHEDULE

| SYMBOL | ABR. | COMMON NAME | BOTANICAL NAME | MINIMUM SIZE | QUANTITY | REMARKS |
|---|---|---|---|---|---|---|
| TREES | | | | | | |
| | QV | QUERCUS VIRGINIA "HIGH RISE" | HIGH RISE LIVE OAK | 12' HT. 3" DBH* | 2 | SINGLE STRAIGHT TRUNK |
| | SP | SABAL PALMETTO | CABBAGE PALM | 15'–18' HT. C.T. | 5 | SPECIMEN |
| | PT | PINUS TAEDA | LOBLOLLY PINE | 8'–10' HT. 3" DBH* | 4 | |
| | MG | MAGNOLIA GRANDIFLORA | LITTLE GEM MAGNOLIA | 8'–10' HT. 3" DBH | 3 | SINGLE STRAIGHT TRUNK |
| | ED | ELAEOCARPUS DECIPIENS | JAPANESE BLUEBERRY | 12' HT. 3" DBH* | 5 | |
| | PM | PODOCARPOS MACROPHYLLA | PODOCARPOS | 36" HT. 42" O.C. | 65 | FULL |
| | LC | LOROPETALUM CHINENSE | LORPETALUM | 3 GAL. 24" HT. 36" O.C. | 10 | FULL |
| | GM | DURANTA ERECTA | GOLD MOUND | 3 GAL. 24"-30" 36" O.C. | 5 | FULL |
| | PG | CORTADERIA | PAMPAS GRASS | 3 GAL. | 7 | |
| | SOD | BAHIA HYBRID | | | BY GC | |

*CALIPER OF NEW TREES SHALL BE MEASURED AT 54" DBH ABOVE BASE OF TREE.

I CERTIFY THAT THE LANDSCAPE AND IRRIGATION DESIGN FOR THIS PROJECT IS IN ACCORDANCE WITH THE CITY OF APOPKA'S ORDINANCE 2069, ADOPTED MAY 21, 2008, WHICH ESTABLISHES WATERWISE LANDSCAPE AND IRRIGATION STANDARDS.

SIGNATURE REG. NO. DATE

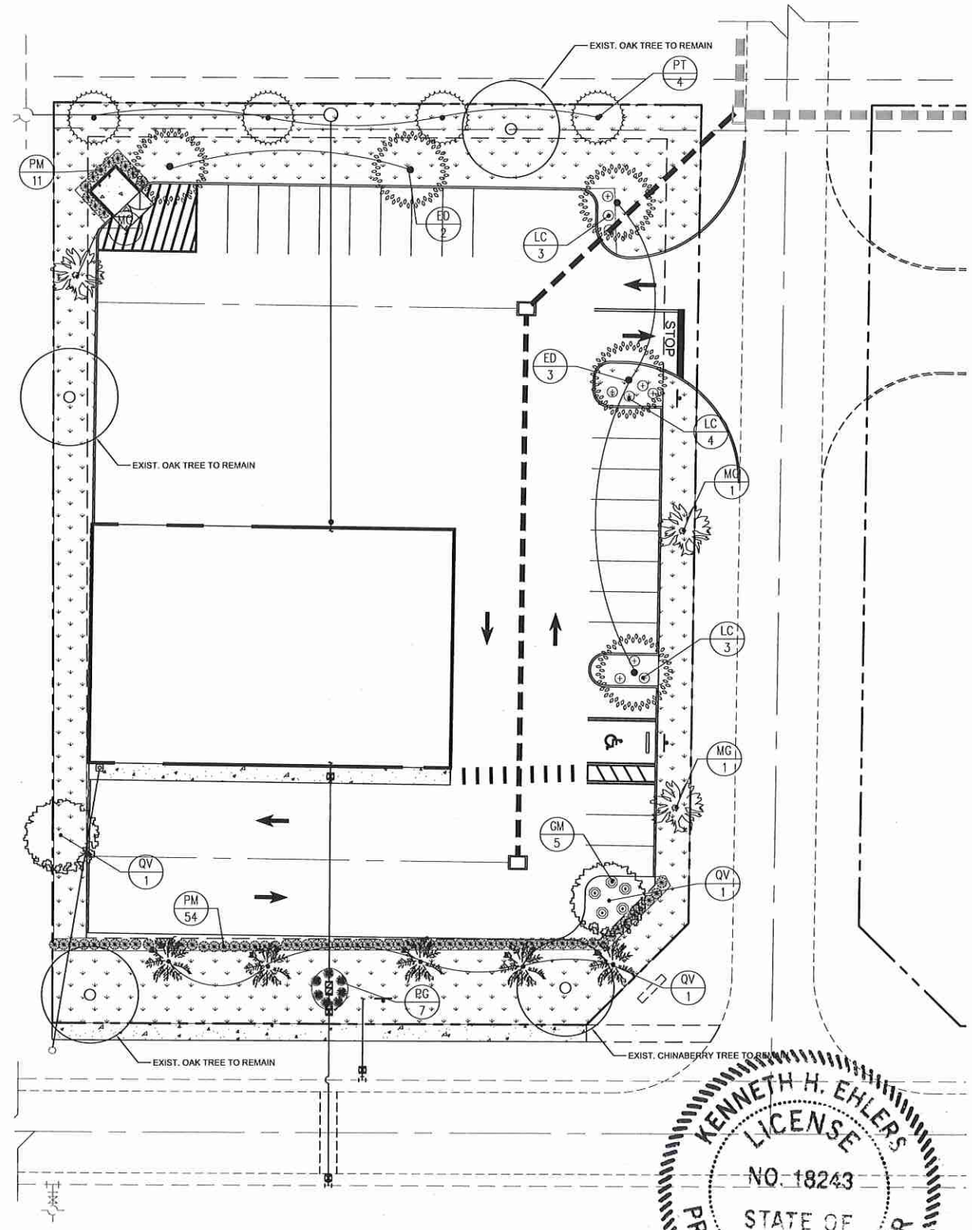


KENNETH H. EHLERS
LICENSE
NO. 18243
STATE OF
FLORIDA
PROFESSIONAL ENGINEER

8/30/19
D Ehlers

# LANDSCAPE PLAN

PLAN NOTES

# LANDSCAPE PLAN

LANDSCAPE PLAN PREPARED BY:
RICK ABT LA#1321
5349 HUGH HOWELL RD.
STONE MOUNTAIN, GA 30087
404/909-2736

| NO. | REVISION/ISSUE | DATE |
|---|---|---|
| | | |
| | | |
| | | |

ENGINEER OF RECORD

KEN EHLERS, P.E.

FLORIDA P.E. LICENSE NO. 18243
PROFESSIONAL ENGINEERING SERVICES
6034 FALCONBRIDGE PLACE
MOUNT DORA, FL 32757
CELL PHONE: (407) 448-3412

PROJECT NAME

AUTO BASE INC.

LOT #3

| DWG | SHEET |
|---|---|
| SHEETS 1-11 | 9 |
| DATE AUGUST 29, 2019 | |
| SCALE AS SHOWN | |

## IRRIGATION NOTES:

1. SPRINKLER LINES & HEAD LOCATIONS SHOWN ARE ESSENTIALLY DIAGRAMMATIC. THE IRRIGATION SYSTEM SHALL BE CONSTRUCTED WITHIN THE PROPERTY BOUNDARIES.
2. CONTRACTOR SHALL INSTALL A COMPLETE IRRIGATION SYSTEM WHICH PROVIDES 100% COVERAGE OF ALL PLANTED & GRASSED AREAS. HEAD SPACING IS TO BE EQUAL TO THE RADIUS OF THE GIVEN SPRINKLER HEADS. PROVIDE ALL PIPING, VALVES, VALVE BOXES, SPRINKLER HEADS & WIRING AS REQUIRED FOR A COMPLETE & OPERATIONAL IRRIGATION SYSTEM.
3. ADJUST SPRINKLER HEAD RADIUS & PATTERN (WHERE APPLICABLE) TO OBTAIN MAX. COVERAGE FOR TURF & SHRUBS ELIMINATING ANY OVERTHROW ONTO SIDEWALKS, PAVEMENT, OR BUILDING STRUCTURE.
4. ALL IRRIGATION PIPING WHICH IS LOCATED UNDER PAVEMENT SHALL BE ENCASED IN A SLEEVE TWO SIZES LARGER THAN THE IRRIGATION LINE.
5. CONTRACTOR TO PROVIDE A DOUBLE DETECTOR CHECK VALVE AT THE POINT OF WATER SERVICE IN ADDITION TO AN IRRIGATION METER. COORDINATE LOCATION WITH OTHER UTILITIES & GENERAL CONTRACTOR.
6. CONTRACTOR IS RESPONSIBLE FOR OBTAINING ANY & ALL PERMITS REQUIRED FOR THE INSTALLATION OR CONSTRUCTION OF THE WORK INCLUDED IN THIS CONTRACT.
7. COORDINATE LOCATION OF IRRIGATION CONTROLLER WITH OWNER & GENERAL CONTRACTOR.
8. PROVIDE A RAIN SWITCH EQUIVALENT TO TORO RAIN SWITCH #850-74. MOUNT ON BUILDING IN AN INCONSPICUOUS LOCATION EXPOSED TO NORMAL RAINFALL & PER MFRS. SUGGESTIONS.
9. OBTAIN INSPECTION & APPROVAL OF ALL BURIED PIPING PRIOR TO BACKFILLING.
10. SPRINKLER HEAD MODEL NUMBERS SHOWN REFLECT TORO SPRINKLERS. ANY SPRINKLERS OF EQUAL QUALITY MAY BE USED WITH THE APPROVAL OF THE OWNER.
11. ADJUST DESIGN OF SYSTEM WHERE NECESSARY TO AVOID CONFLICTS IN THE FIELD WITH LANDSCAPING OR UTILITY LINES.
12. IRRIGATION CONTROLLER IS HUNTER IRRIGATION CONTROLLER PER OWNER'S APPROVAL.
13. PROGRAM IRRIGATION CONTROLLER TO PROVIDE 0.5 INCH OF WATER PER WEEK. SCHEDULE HEADS TO OPERATE DURING MORNING HOURS.
14. ALL MAINLINE PIPING SHALL BE BURIED TO A MINIMUM DEPTH OF 18" OF COVER. ALL LATERAL PIPING SHALL BE BURIED TO A MINIMUM DEPTH OF 12" OF COVER.
15. ALL POP-UP ROTORS & SPRAYS SHALL BE INSTALLED USING AN 18" PVC FLEX PIPE CONNECTION. DO NOT USE FUNNY PIPE.
16. THROTTLE ALL VALVES ON SHRUB LINES AS REQUIRED TO PREVENT FOGGING.
17. ALL CONTROL WIRE SPLICES SHALL BE MADE IN VALVE BOXES USING SNAP-TITE CONNECTORS & SEALANT.
18. THE CONTRACTOR SHALL PREPARE AN AS-BUILT DRAWING SHOWING ALL IRRIGATION INSTALLATIONS. THE DRAWING SHALL LOCATE ALL VALVES & MAINLINES BY SHOWING EXACT MEASUREMENTS FROM HARD SURFACES OR STRUCTURES.
19. ANY PIPING SHOWN OUTSIDE THE PROPERTY LINE OR RUNNING OUTSIDE A IRRIGATION AREA IS SHOWN THERE FOR CLARITY ONLY. ALL LINES SHALL BE INSTALLED ON THE PROPERTY & INSIDE THE IRRIGATIOND AREAS.
20. ALL WORK SHALL BE GUARANTEED FOR ONE YEAR FROM THE DATE OF FINAL ACCEPTANCE AGAINST ALL DEFECTS IN EQUIPMENT & WORKMANSHIP.
21. ELECTRICAL SERVICE TO ALL EQUIPMENT SHALL BE PROVIDED TO A JUNCTION BOX AT THE EQUIPMENT LOCATION BY OTHERS.
22. ALL IRRIGATION SLEEVES ARE TO HAVE BEEN INSTALLED BY GENERAL CONTRACTOR AT TIME OF UTILITY CONSTRUCTION.
23. IF SYSTEM IS UTILIZING IRRIGATION WELL OR RE-USE WATER, THEN PROVIDE APPROPRIATE PURPLE HEADS, VALVES AND PIPING, ETC. PLACE APPROPRIATE WARNING SIGNS TO NOTIFY PUBLIC OF NON-POTABLE WATER USAGE.

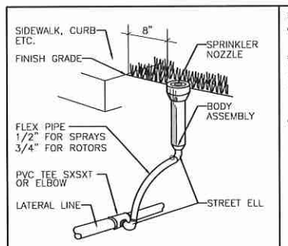


SPRINKLER HEAD DETAIL
1 L-2 NOT TO SCALE

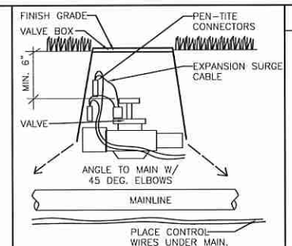


ELECTRIC VALVE DETAIL
2 L-2 NOT TO SCALE

### IRRIGATION LEGEND

- 12" POP-UP SPRAY HEAD
- 6" POP-UP STREAM ROTOR
- DRIP EMITTERS – 2 PER TREE
- TORO PLASTIC VALVE
- DRIPLINE ZONE VALVE
- C CONTROLLER
- R RAIN SENSOR
- PVC SLEEVE–2 SIZES LARGER

VALVE ZONE NO. — X | 1" — VALVE SIZE; XX.X — VALVE GPM

GRAPHIC SCALE
0' 10' 20' 40' 60'
1" = 20'

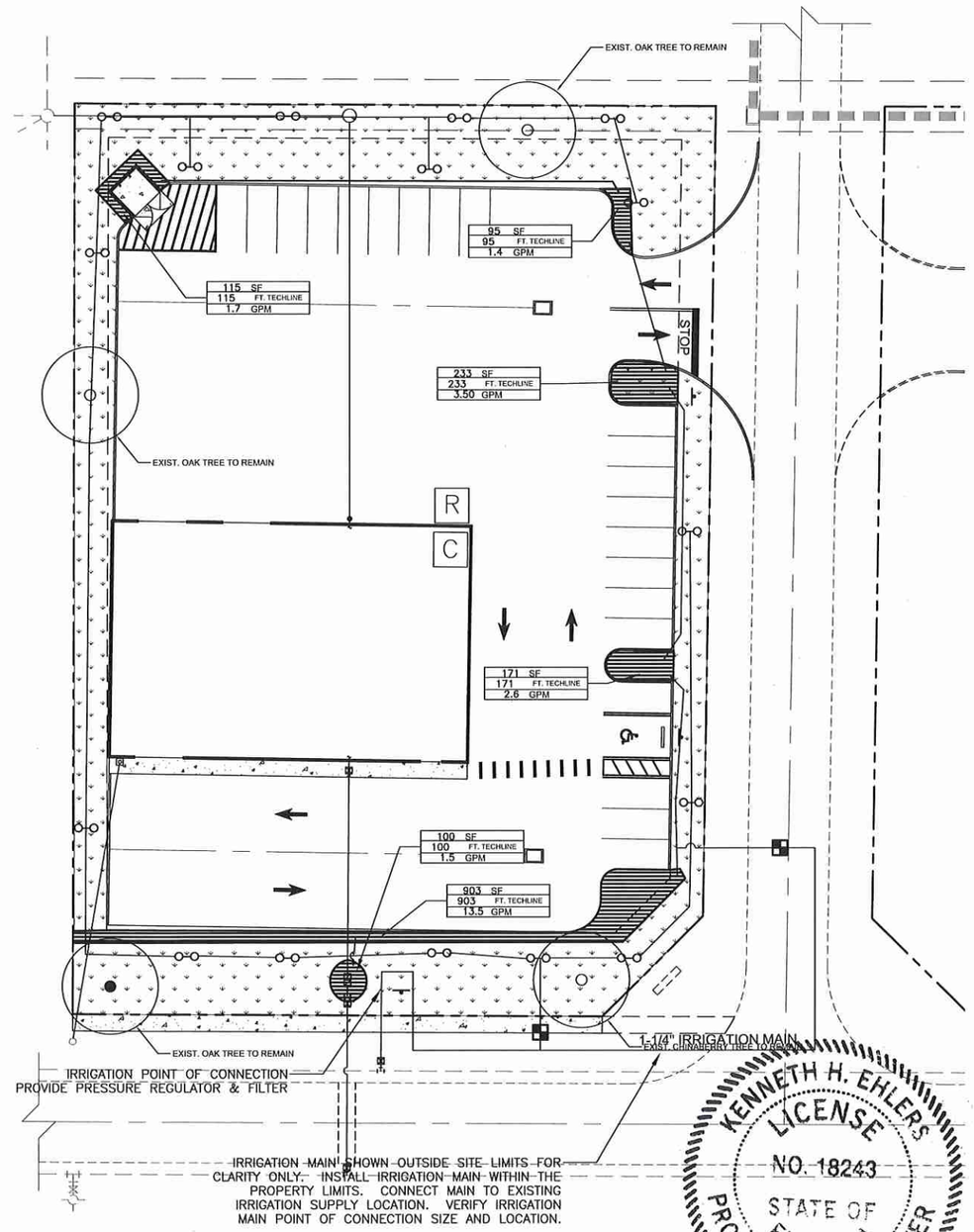


KENNETH H. EHLERS
LICENSE
NO. 18243
STATE OF FLORIDA
PROFESSIONAL ENGINEER

10/19

# IRRIGATION PLAN



PLAN NOTES

# IRRIGATION PLAN

LANDSCAPE PLAN PREPARED BY:
RICK ABT LA#1321
5349 HUGH HOWELL RD.
STONE MOUNTAIN, GA 30087
404/909-2736

| NO. | REVISION/ISSUE | DATE |
|---|---|---|
| | | |
| | | |
| | | |


ENGINEER OF RECORD
KEN EHLERS, P.E.
FLORIDA P.E. LICENSE NO. 18243
PROFESSIONAL ENGINEERING SERVICES
6034 FALCONBRIDGE PLACE
MOUNT DORA, FL 32757
CELL PHONE: (407) 448-3412


PROJECT NAME
AUTO BASE INC.
LOT #3

| DWG | SHEET |
|---|---|
| SHEETS 1-11 | 10 |
| DATE: AUGUST 29, 2019 | |
| SCALE: AS SHOWN | |

| Landreth Lighting Luminaire Schedule | | | | | | | | | |
|---|---|---|---|---|---|---|---|---|---|
| Symbol | [MANUFAC] | Qty | Label | Arrangement | Description | LLF | Lum. Watts | Lum. Lumens | BUG Rating |
| | Lithonia Lighting | 6 | SLW | SINGLE | DSXW2 LED 30C 1000 40K TFTM MVOLT FINISH; WALL MOUNTED @ 30' AFG | 1.000 | 109 | 11119 | B2-U0-G3 |
| | Lithonia Lighting | 1 | SLA | SINGLE | DSX0 LED P7 40K BLC MVOLT; MOUNTED @ 30' AFG ON A ROUND TAPERED DIRECT BURY ALUMINUM POLE | 1.000 | 166 | 15049 | B2-U0-G2 |

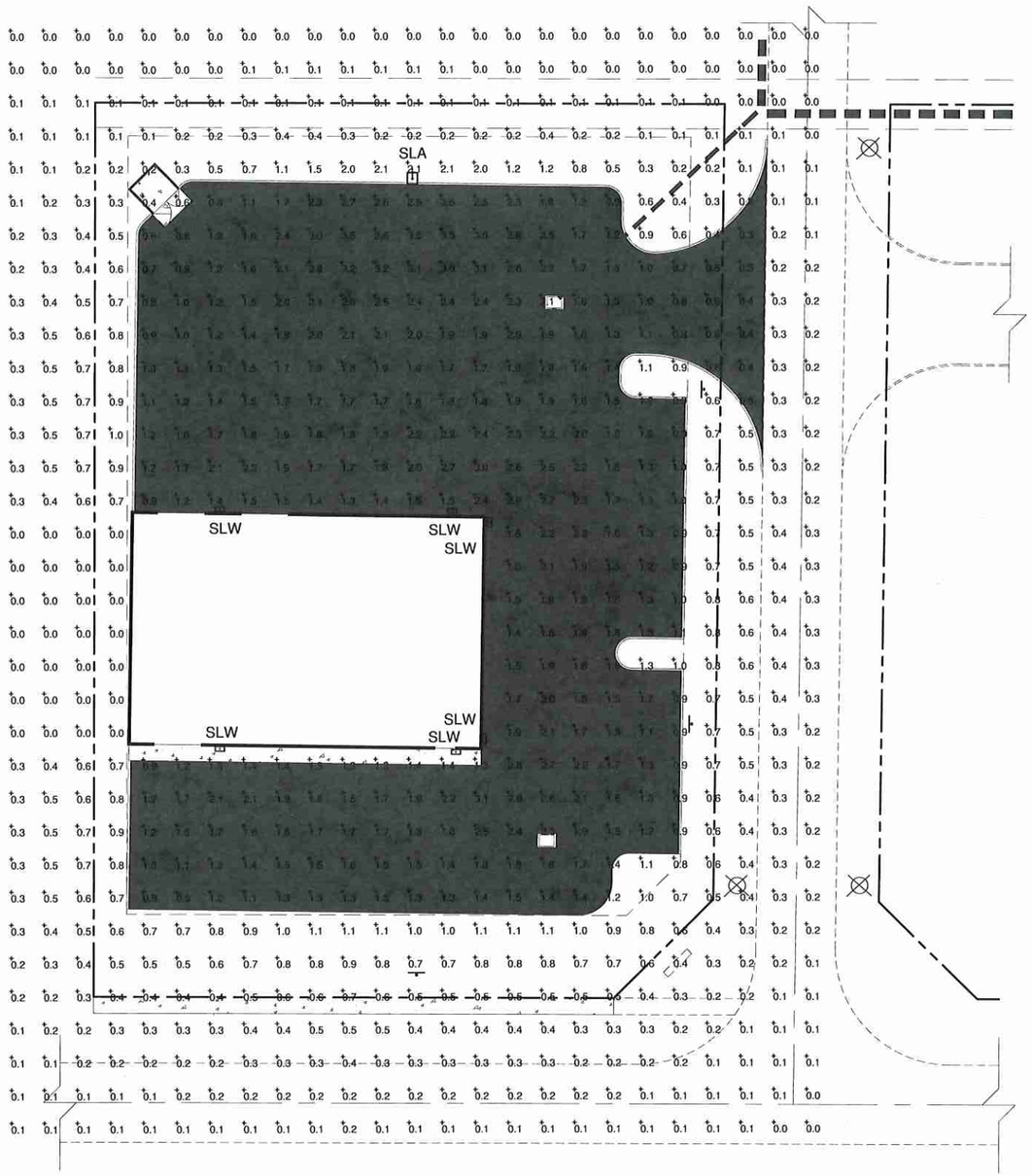


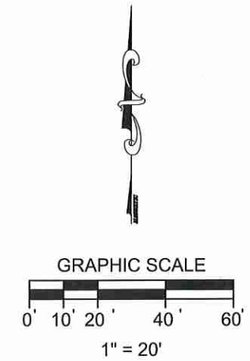


| Landreth Lighting Calculation Summary | | | | | | | |
|---|---|---|---|---|---|---|---|
| Label | CalcType | Units | Avg | Max | Min | Avg/Min | Max/Min |
| Parking Lots | Illuminance | Fc | 1.72 | 3.6 | 0.6 | 2.87 | 6.00 |

KENNETH H. EHLERS LICENSE NO. 18243 STATE OF FLORIDA PROFESSIONAL ENGINEER

48 HOURS BEFORE DIGGING CALL TOLL FREE 1-800-432-4770 SUNSHINE STATE ONE CALL OF FLORIDA, INC.

9/30/19

KENNETH H. EHLERS, FL PE #18243

# PHOTOMETRIC PLAN



PLAN NOTES

# PHOTOMETRIC PLAN

AUTO BASE INC.
651 MARSHALL LAKE ROAD
APOPKA, FLORIDA 32703

| NO. | REVISION/ISSUE | DATE |
|---|---|---|
| | | |
| | | |
| | | |

ENGINEER OF RECORD
KEN EHLERS, P.E.
FLORIDA P.E. LICENSE NO. 18243
PROFESSIONAL ENGINEERING SERVICES
6034 FALCONBRIDGE PLACE
MOUNT DORA, FL 32757
CELL PHONE: (407) 448-3412

PROJECT NAME
AUTO BASE INC.
LOT #3

| DWG SHEETS 1-11 | SHEET |
|---|---|
| DATE AUGUST 29, 2019 | 11 |
| SCALE AS SHOWN | |

# CITY OF APOPKA
# PLANNING COMMISSION

| | | | |
|---|---|---|---|
| X | PUBLIC HEARING | MEETING OF: | October 8, 2019 |
| | SITE PLAN | FROM: | Community Development |
| | SPECIAL REPORTS | EXHIBITS: | Vicinity Map |
| X | OTHER: Final Development Plan | | Aerial Map |
| | | | Final Development Plan |
| | | | Special Exception Approval |

**SUBJECT:** **CENTRAL FLORIDA PREPARATORY SCHOOL FINAL DEVELOPMENT PLAN**

**REQUEST:** **RECOMMEND APPROVAL OF THE FINAL DEVELOPMENT PLAN FOR CENTRAL FLORIDA PREPARATORY SCHOOL**

**SUMMARY:**

| | |
|---|---|
| OWNER/APPLICANT: | Emerson Point Association, LLLP, c/o Michael Wright |
| ENGINEER: | Appian Engineering, LLC, c/o Luke M. Classon, P.E. |
| LOCATION: | 1800 Marden Road |
| PARCEL ID NUMBER: | 17-21-28-5501-01-000 |
| FUTURE LAND USE: | Commercial |
| ZONING: | PUD (Planned Unit Development) |
| EXISTING USE: | Vacant |
| PROPOSED USE(S): | Private School |
| TRACT SIZE: | 6.39 +/- acres; 278,348 +/- square feet |
| BUILDING SIZE: | 39,514 square feet of School Building; 12,563 square feet of Gymnasium |
| FLOOR AREA RATIO: | Proposed 0.19; Maximum 0.25 |
| LAND DEVELOPMENT CODE: | 1993 |

**DISTRIBUTION**

| | | |
|---|---|---|
| Mayor Nelson | Finance Director | Public Services Director |
| Commissioners | HR Director | Recreation Director |
| City Administrator | IT Director | City Clerk |
| Community Development Director | Police Chief | Fire Chief |

**RELATIONSHIP TO ADJACENT PROPERTIES:**

| ***Direction*** | ***Future Land Use*** | ***Zoning*** | ***Present Use*** |
|---|---|---|---|
| North (City) | Commercial | PUD | Multi-Family Development/Marden Ridge Apartments |
| East (City) | Commercial | C-C (Community Commercial) | Vacant |
| South (State) | Public Right-of-Way (ROW) | ROW | S.R. 414 |
| West (State) | ROW | ROW | S.R. 451 |

**PROJECT SUMMARY:** The Central Florida Preparatory School - Final Development Plan is a site plan proposing a building, 39,514 square feet in size, for a private school use and a gymnasium, 12,563 square feet in size, on 6.39 acres. A tot lot is also proposed adjacent to the school building, enclosed with an aluminum or wrought iron fence. The drop-off zone is located on the west side of the building that includes a pedestrian crossing. The private school will be gated and the gate will only be open during morning drop-off times, afternoon dismissal and special events. The three-lane car drop-off queue is located on the north of the site. The private school will offer education to students from pre-school to 12th grade for a maximum enrollment of 600 full-time students. This project is subject to the standards set forth in PUD Ordinance No. 2434, as well as, the conditions of approval for the granted Special Exception.

The minimum setbacks applicable to this project are:

| **Setback** | **Min. Standard** |
|---|---|
| Front | 50’ from Centerline of ROW/ 10’from the property line |
| Side | 10’ |
| Rear | 10’ |

**PARKING AND INTERNAL CIRCULATION:** Per Code, 165 parking spaces are required. The applicant proposes a total of 232 parking spaces are proposed including 6 accessible spaces. As students will be dropped off and picked utilizing three one-way drive aisles. To promote safety during the student drop-off and pick-up schedule, the school administration operates a mandatory procedure that all vehicle drivers and students must follow. This procedure was presented to the Development Review Committee.

**ACCESS:** The site is proposed to be served by a full access driveway on Marden Road that will connect as the eastbound leg of the existing roundabout at Marden Road and SR 414 Off-Ramp. A second right-in-right-out only access will be located at the northeast corner of the project site.

**TRANSPORTATION IMPACTS:** A Traffic Impact Analysis (TIA) was submitted for this project that assessed the impacts on the transportation facilities within one mile of the site. The project is anticipated to generate 1,488 Daily trips, and of those trips, 102 will occur during the PM Peak Hour. The following roadway segments were analyzed for capacity in the study: Marden Road from Ocoee Apopka Road to Keene Road; CR 435/Clarcona Road from Michael Gladden Boulevard to Keene Road; CR 437A/Ocoee Apopka Road from Central Avenue to Keene Road; and Boy Scout Road from Binion Road to Ocoee Apopka Road. The roadway segment analysis demonstrates sufficient capacity exists on all study roadway segments to accommodate the addition of trips generated by this project.

**STORMWATER:** The stormwater management system includes an on-site retention area, on the western portion of the site. Per the City Engineer, the stormwater pond design meets the City's Land Development.

**LANDSCAPING/BUFFER:** The landscaping plans show that the southern boundary is proposed to be lined with six-foot tall aluminum fence, Live Oaks and Magnolia trees. The eastern boundary adjacent to Marden Ridge includes Magnolia and Birch trees and a 6-foot tall aluminum fence. The northern boundary contains a 6-foot tall masonry wall along the length of the car lanes. Foundation plantings are provided on the perimeter of the gymnasium and school building. The planting materials are consistent with the standards set forth in Ordinance No. 2069.

**ORANGE COUNTY NOTIFICATION**: The County was notified at the time of the site plan review for this property through the DRC agenda distribution.

**PUBLIC HEARING SCHEDULE**:
October 8, 2019 - Planning Commission, 5:30 p.m.
October 16, 2019 - City Council, 7:00 p.m.

---

**RECOMMENDATION ACTION:**

The **Development Review Committee** recommends approval of the Central Florida Preparatory School - Final Development Plan subject to Ordinance No. 2434, Conditions of the approval for the Special Exception and the findings of this staff report.

**Planning Commission**: Find the Central Florida Preparatory School - Final Development Plan consistent with the Comprehensive Plan, Land Development Code and Special Exception Approval, and recommend approval of the Final Development Plan, subject to Ordinance No. 2434, Conditions of the approval for the Special Exception and the findings of this staff report.

**Planning Commission Role:** To advise the City Council to approve, deny, or approve with conditions based on consistency with the Comprehensive Plan and Land Development Code.

**Note: This item is considered Legislative. The staff report and its findings are to be incorporated into and made a part of the minutes of this meeting.**

**Project Name:** Central Florida Preparatory School - Final Development Plan
**Owner:** Emerson Point Association, LLLP c/o Michael Wright
**Engineer:** Appian Engineering, LLC c/o Luke M. Classon, P.E
**Parcel I.D. No.:** 17-21-28-5501-01-000
**Property Address:** 1800 Marden Road
**Total Acreage:** 6.39 +/- acres

# VICINITY MAP

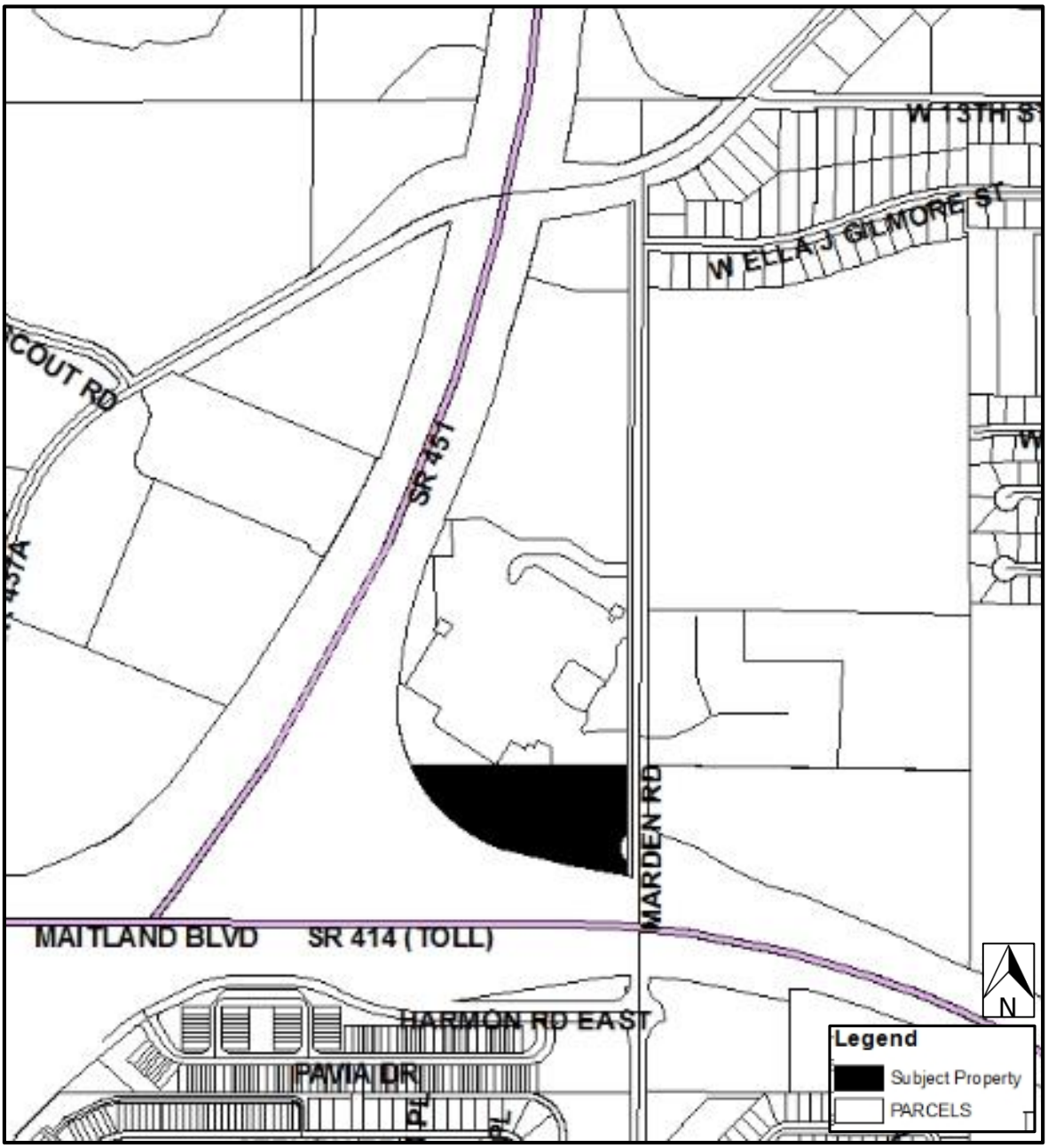

# AERIAL MAP

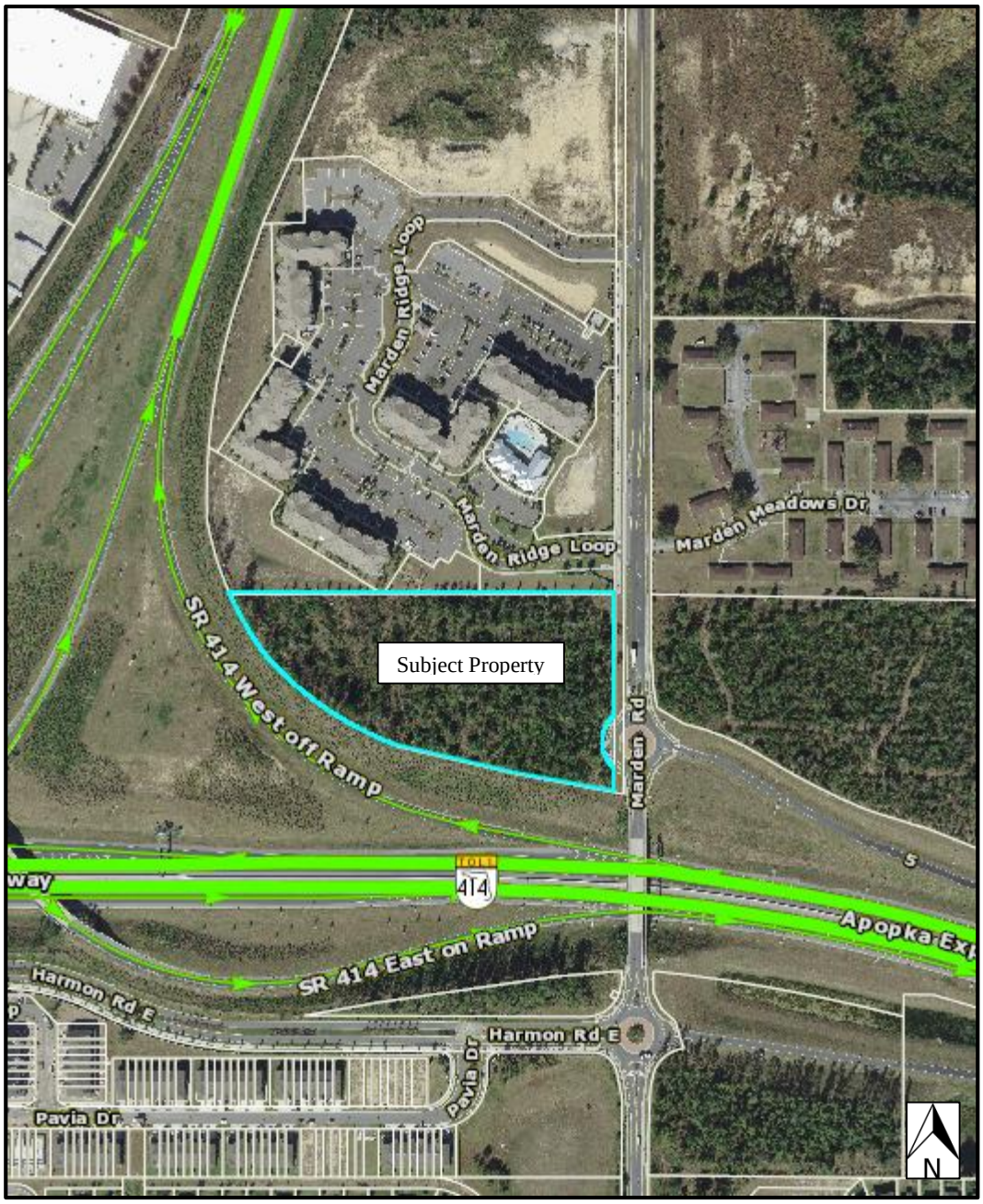
Marden Ridge Loop
Marden Ridge Loop
Marden Meadows Dr
Subject Property
SR 414 West off Ramp
Marden Rd
414
Apopka Ex
SR 414 East on Ramp
Harmon Rd E
Harmon Rd E
Pavia Dr
Pavia Dr
N

SUBJECT TO ORDINANCE NO. 2434 AND TO SPECIAL EXCEPTION APPROVED JULY 9, 2019 △1

# PRELIMINARY DEVELOPMENT PLAN / FINAL DEVELOPMENT PLAN

FOR

# CENTRAL FLORIDA PREPARATORY SCHOOL

## CITY OF APOPKA, FLORIDA

## OCPA PARCEL ID# 17-21-28-5501-01-000

**LEGAL DESCRIPTION PER - ON THE MARK SURVEYING, LLC**
**DATED: 05/23/19**

(PER ALTA COMMITMENT FOR TITLE INSURANCE BY FIRST AMERICAN TITLE INSURANCE COMPANY, FILE NO.: NCS-958347-ORL, ISSUING OFFICE FILE NUMBER: NCS-958347-ORL, COMMITMENT NUMBER: NCS-958347-ORL, BEARING A COMMITMENT DATE OF APRIL 10, 2019 AT 8:00 AM.)

THE LAND REFERRED TO HEREIN BELOW IS SITUATED IN THE COUNTY OF ORANGE, STATE OF FLORIDA, AND IS DESCRIBED AS FOLLOWS:

PARCEL 1:

LOT 1, MARDEN RIDGE ACCORDING TO THE PLAT THEREOF RECORDED IN PLAT BOOK 87, PAGE 66, PUBLIC RECORDS OF ORANGE COUNTY, FLORIDA.

LESS AND EXCEPT THEREFROM A PORTION OF LOT 1 CONVEYED TO THE CITY OF APOPKA, FLORIDA, A MUNICIPAL CORPORATION, BY SPECIAL WARRANTY DEED RECORDED IN OFFICIAL RECORDS INSTRUMENT #20160580139, PUBLIC RECORDS OF ORANGE COUNTY, FLORIDA.

PARCEL 2:

NON-EXCLUSIVE EASEMENTS FOR THE BENEFIT OF PARCEL 1 AS CONTAINED IN ARTICLE 4 OF THE DECLARATION OF COVENANTS, CONDITIONS, RESTRICTIONS AND OBLIGATIONS MARDEN RIDGE RECORDED IN OFFICIAL RECORDS BOOK 11032, PAGE 6298; AS AFFECTED BY FIRST AMENDMENT TO DECLARATION OF COVENANTS, CONDITIONS, RESTRICTIONS AND EASEMENTS RECORDED IN OFFICIAL RECORDS INSTRUMENT #20160536671, PUBLIC RECORDS OF ORANGE COUNTY, FLORIDA.

## UTILITY PROVIDERS

**WATER/SEWER/RECLAIMED:**
CITY OF APOPKA
748 E. CLEVELAND STREET
APOPKA, FL 32703
CONTACT: VLADIMIR SIMONOVSKI
PHONE: (407) 703-1731

**GAS:**
LAKE APOPKA NATURAL GAS DISTRICT
1320 WINTER GARDEN VINELAND ROAD
ORLANDO, FL 32803
CONTACT: ANTONIO GIBSON
PHONE: (407) 656-2734

**CABLE:**
CHARTER COMMUNICATIONS (A.K.A. SPECTRUM)
3767 ALL AMERICAN BOULEVARD
ORLANDO, FLORIDA 32810
CONTACT: MARVIN USRY JR.
PHONE: (407) 532-8509

**SOLID WASTE COLLECTION:**
CITY OF APOPKA
120 E MAIN STREET
APOPKA, FLORIDA 32703
PHONE: (407) 703-1700

**TELEPHONE:**
CENTURY LINK
33 N. MAIN MAIN STREET, ROOM 144
WINTER GARDEN, FL 34787
CONTACT: TY LESLIE
PHONE: (407) 814-5293

CHARTER COMMUNICATIONS
(A.K.A. SPECTRUM)
3767 ALL AMERICAN BOULEVARD
ORLANDO, FLORIDA 32810
CONTACT: MARVIN USRY JR.
PHONE: (407) 532-8509

**POWER:**
DUKE ENERGY
2501 25TH STREET NORTH
ST. PETERSBURG, FL 33713
CONTACT: STEPHANIE OLMO
PHONE: (407) 905-3376

## PROJECT TEAM

OWNER
EMERSON POINT ASSOCIATES, LLLP
CONTACT: MIKE WRIGHT
100 EAST PINE ST
ORLANDO, FL 32811
EMAIL:MIKE@MMI.COM

DEVELOPER
CENTRAL FLORIDA PREPARATORY SCHOOL, INC.
CONTACT: ROWENA RAMOS
1450 CITRUS OAK AVE
GOTHA, FL 34734
PHONE: (407) 290-8073
FAX: (407) 298-6443
EMAIL: ROWENARAMOS817@GMAIL.COM

ENGINEER
APPIAN ENGINEERING, LLC
ENGINEER: LUKE M. CLASSON, P.E.
2221 LEE ROAD-SUITE 27
WINTER PARK, FL 32789
PHONE: (407) 960-5868
FAX: (866) 571-8179
EMAIL: LCLASSON@APPIANFL.COM

SURVEYOR
ON THE MARK SURVEYING
SURVEYOR: COREY A. HOPKINS
143 MEADOW BOULEVARD
SANFORD, FLORIDA 32771
PHONE: (321) 626-6376
EMAIL: OTMSURVEYING@GMAIL.COM

LANDSCAPE ARCHITECT
LANDSCAPE DESIGNS, LLC
ARCHITECT: CARL J. KELLY JR., RLA
4465 GABRIELLA LANE
WINTER PARK, FL 32792
PHONE: (407) 484-3414
EMAIL: CKELLY1@CFL.RR.COM

GEOTECHNICAL ENGINEER
ANDREYEV ENGINEERING, INC.
ENGINEER: ROBERT B. CORNELIUS, P.E.
1170 W. MINNEOLA AVENUE
CLERMONT, FL 34711
PHONE: (352) 241-0508
EMAIL: R.CORNELIUS@ANDREYEVENGINEERING.COM

ENVIRONMENTAL CONSULTANT
BIO-TECH CONSULTING INC.
ENVIRONMENTALIST: DANIEL GOUGH, P.E
3025 EAST SOUTH STREET
ORLANDO, FL 32803
PHONE: (407) 894-5969
FAX: (407) 894-5970
EMAIL: DANNY@BIO-TECHCONSULTING.COM

TRAFFIC ENGINEER
TRAFFIC & MOBILITY CONSULTANTS
ENGINEER: MOHAMMED ABDALLAH, P.E., P.T.O.E.
3101 MAGUIRE BLVD., SUITE 265
ORLANDO, FL 32803
PHONE: (407) 531-5332
EMAIL: MNA@TRAFFICMOBILITY.COM

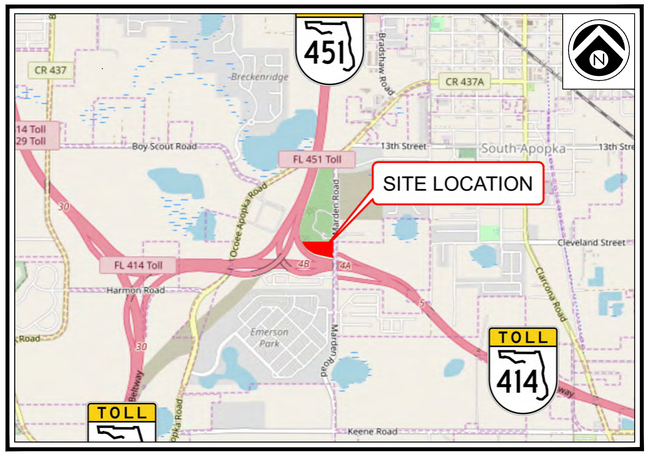


## VICINITY MAP

SCALE: 1" = 2000'

**Marden Road and Ocoee-Apopka Road Intersection** △2

At the time a traffic signal is warranted by the City of Apopka or Orange County at the intersection of Marden Road and Ocoee-Apopka Road, the proposed Central Florida Preparatory School shall be required to pay its proportionate share of the cost of the signal. The proportionate share amount shall be calculated based on the traffic impacts of the proposed school as documented in the Traffic Impact Analysis conducted by Traffic & Mobility Consultants, LLC, and approved by the City of Apopka in July 2019.

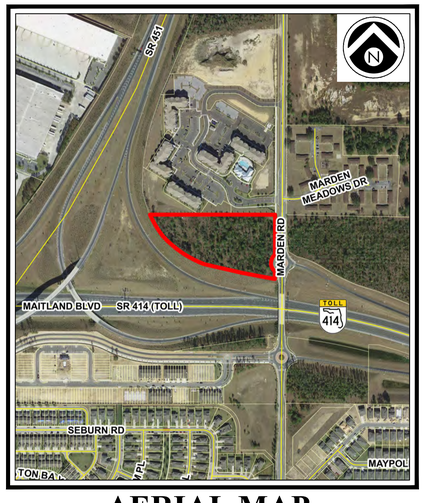


## AERIAL MAP

SCALE: 1" = 500'

| MAP Unit Symbol | Map Unit Name | Hydologic Soil Group |
|---|---|---|
| 4 | CANDLER FINE SAND, 0-5 % SLOPES | A |
| 5 | CANDLER FINE SAND, 5-12 % SLOPES | A |
| 6 | CANDLER-APOPKA FINE SANDS, 5-12 % SLOPES | A |
| 21 | LAKE FINE SAND, 0-5 % SLOPES | A |

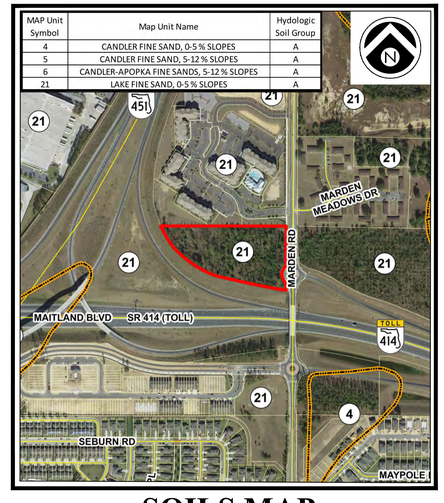


## SOILS MAP

SCALE: 1" = 500'

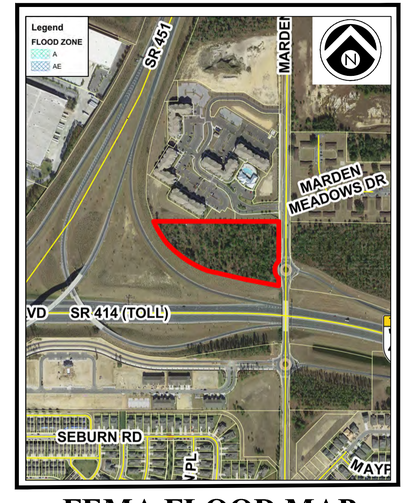


## FEMA FLOOD MAP

SCALE: 1" = 500'

## SHEET INDEX


| Sheet Number | Sheet Title |
|---|---|
| -- | COVER SHEET |
| C1.0 | GENERAL NOTES |
| C1.1 | SYMBOLS AND ABBREVIATIONS |
| C1.2 | EXISTING CONDITIONS |
| C2.0 | EROSION CONTROL AND DEMO PLAN |
| C2.1 | EROSION CONTROL & M.O.T DETAILS |
| C3.0 | GEOMETRY PLAN |
| C3.1 | CROSS SECTIONS |
| C3.2 | SIGNING & STRIPING PLAN |
| C3.3 | FIRE TRUCK ROUTING PLAN |
| C3.4 | LIGHTING PLAN |
| C4.0 | UTILITY NOTES |
| C4.1 | UTILITY PLAN |
| C5.0 | PAVING & GRADING PLAN |
| C6.0 | DRAINAGE PLAN |
| C7.0 | CIVIL DETAILS |
| C8.0 | DRAINAGE DETAILS |
| C8.1 | DRAINAGE DETAILS |
| C9.0 | UTILITY DETAILS |
| C9.1 | UTILITY DETAILS |
| C9.2 | UTILITY DETAILS |
| C9.3 | UTILITY DETAILS △2 |
| LS-01 | TREE MITIGATION PLAN |
| LS-02 | LANDSCAPE SITE PLAN |
| IR-01 | IRRIGATION SITE PLAN |
| SHEET 1 OF 2 | TOPOGRAPHIC & TREE SURVEY |
| SHEET 2 OF 2 | TOPOGRAPHIC & TREE SURVEY |


**Special Exception Conditions of Approval**
**Central Florida Preparatory School** △2

1. Location of driveway connections to Marden Road is approximate and shall not be determined until the development plan and associated traffic impact analysis are approved by the City.
2. A multi-use trail along Marden Road shall be appear on the development plan as provided within the first phase of the Marden Ridge Planned Unit Development.
3. At the time of the development plan application, the drop-off zone at the west side of the building shall provide a details for a pedestrian crossing system from the outer drop-off lanes to the sidewalk next to the building.
4. In the situation the City determines that traffic generated from the school experiences backup or safety concerns on Marden Road during school drop-off and pick-up times, the Apopka Chief of Police may require that law enforcement officer(s) be present to direct traffic. Cost to have law enforcement officers present to direct traffic at Marden Road for activities occurring at the school site shall be at the expense of the school.
5. The Special Exception applies for a private school offering education to students from pre-school through 12th grade for a maximum enrollment of 600 full-time student equivalency students. (FTE)
6. Outdoor storage or display of equipment or materials shall not be allowed.
7. School buses and vans parked overnight shall be parked in designated parking areas, designated bus lanes or special bus parking spaces denoted on the development plan.
8. Vehicles for school or other activities occurring at the school property shall not park within the right-of-way for Marden Road, and shall not be parked on adjacent or nearby property unless approved by the property owner in a written agreement.
9. Banners, flags, or signs shall not be placed on the building or school property unless authorized through a City sign permit or as permitted by the sign code.
10. Outdoor school activities and site maintenance shall not occur between the hours of 10 p.m. and 7:00 a.m.
11. Portable buildings for classrooms or other purposes shall not be stored or used at the school property.
12. The Development Plan for the school site, including parking requirements, shall be consistent with the Conditions of Approval.

Call 48 hours before you dig
It's the Law!
1-800-432-4770
Sunshine State One Call of Florida, Inc.

**SHEET 1 OF 22**


APPIAN ENGINEERING
2221 LEE ROAD, SUITE 27
WINTER PARK, FLORIDA 32789
(407) 960-5868


BOARD OF PROFESSIONAL ENGINEERING CERTIFICATE NO. 32174

PERMITS REQUIRED

| AGENCY | PERMIT TYPE | DATE APPLIED | DATE APPROVED | APPROVAL NO. |
|---|---|---|---|---|
| CITY OF APOPKA | SITE PERMIT | | | |
| S.J.R.W.M.D. | ERP | | | |
| F.D.E.P. | WATER | | | |
| F.D.E.P. | WASTEWATER | | | |

| REV. | DATE | DESCRIPTION |
|---|---|---|
| △1 | 08/27/19 | CITY OF APOPKA COMMENTS DATED 8/27/19 |
| △2 | 09/17/19 | CITY OF APOPKA COMMENTS DATED 9/17/19 |
| △3 | | |
| △4 | | |
| △5 | | |
| △6 | | |
| △7 | | |
| △8 | | |
| △9 | | |
| △10 | | |

9/19/19

P:_project drawings\mmi-006 central fl preparatory school\Drawings\cad civil3d\Layouts\04 final development plan\COVER SHEET.dwg Plotted:9/19/2019 By:ssiercogil

P:_project drawings\mmi-006 central fl preparatory school\Drawings\cad civil3d\Layouts\04 final development plan\GENERAL NOTES.dwg Modified:7/19/2019 By:gcorral Plotted By:sofia sierra-gil

## GENERAL NOTES

1. UNLESS OTHERWISE SPECIFIED, ALL WORK SHALL BE PERFORMED CONSISTENT WITH THE FOLLOWING SPECIFICATIONS:

- CITY OF APOPKA, FLORIDA
- ST. JOHNS RIVER WATER MANAGEMENT DISTRICT
- FLORIDA DEPARTMENT OF TRANSPORTATION
- FLORIDA DEPARTMENT OF ENVIRONMENTAL PROTECTION
- NATIONAL POLLUTANT DISCHARGE ELIMINATION SYSTEM

2. THE GEOTECHNICAL REPORT SHALL BE REVIEWED BY THE CONTRACTOR, AND THE CONTRACTOR SHALL FAMILIARIZE HIMSELF WITH THE SITE, INCLUDING ALL SURFACE AND SUBSURFACE CONDITIONS, THE WORK REQUIRED, AND ALL OTHER CONDITIONS THAT MAY AFFECT THE SUCCESSFUL COMPLETION OF THE JOB PRIOR TO COMMENCEMENT OF WORK.

3. THE CONTRACTOR SHALL GIVE ALL NOTICES AND COMPLY WITH ALL LAWS, ORDINANCES, RULES, REGULATIONS AND PERMIT CONDITIONS BEARING ON THE CONDUCT OF THE WORK, AS DRAWN AND SPECIFIED. IF THE CONTRACTOR OBSERVES THAT THE DRAWINGS AND SPECIFICATIONS ARE AT VARIANCE THEREWITH, HE SHALL PROMPTLY NOTIFY THE ENGINEER, IN WRITING, AND ANY NECESSARY CHANGES SHALL BE ADJUSTED, AS PROVIDED IN THE AGREEMENT FOR CHANGES IN THE WORK.

4. THE CONTRACTOR SHALL BE RESPONSIBLE TO THE OWNER AND THE ENGINEER FOR THE ACTS AND OMISSIONS OF CONTRACTOR'S EMPLOYEES AND ALL HIS SUBCONTRACTORS AND THEIR AGENTS AND EMPLOYEES AND OTHER PERSONS PERFORMING ANY OF THE WORK UNDER A CONTRACT WITH THE CONTRACTOR.

5. THE CONTRACTOR SHALL BE RESPONSIBLE FOR MAKING ALL NECESSARY ARRANGEMENTS WITH GOVERNMENTAL DEPARTMENTS, PUBLIC UTILITIES, PUBLIC CARRIERS, SERVICE COMPANIES, AND CORPORATIONS OWNING OR CONTROLLING ROADWAYS, RAILWAYS, WATER, SEWER, GAS, ELECTRICAL, TELEPHONE, AND TELEGRAPH FACILITIES SUCH AS PAVEMENTS, TRACKS, PIPING, WIRES, CABLES, CONDUITS, POLES, GUYS, OR OTHER SIMILAR FACILITIES, INCLUDING INCIDENTAL STRUCTURES CONNECTED THEREWITH THAT ARE ENCOUNTERED IN THE WORK IN ORDER THAT SUCH ITEMS MAY BE PROPERLY SUPPORTED, PROTECTED OR LOCATED.

6. UNLESS OTHERWISE SPECIFIED IN THE GENERAL CONDITIONS, ALL CONSTRUCTION IS TO BE GOVERNED BY THE PLANS, APPLICABLE PERMITS, AND SPECIFICATIONS HEREIN, AND ALL APPLICABLE FEDERAL, STATE AND LOCAL BUILDING AND SAFETY CODES, LAWS AND ORDINANCES.

7. PRIOR TO PERFORMING ANY WORK WITHIN ANY PUBLIC OR UTILITY RIGHT-OF-WAY, CONTRACTOR SHALL OBTAIN AUTHORIZATION AND PERMIT FROM JURISDICTION RESPONSIBLE FOR SUCH RIGHT-OF-WAY. IN ADDITION, CONTRACTOR SHALL OBTAIN GAS I.D. NUMBER FROM LOCAL GAS COMPANY AND NOTIFY SUNSHINE STATE ONE-CALL UTILITY NOTIFICATION CENTER AT 1-800-432-4770 AT LEAST 48 HOURS PRIOR TO START OF WORK.

8. PRIOR TO PERFORMING ANY WORK WITHIN ANY PUBLIC RIGHT-OF-WAY, CONTRACTOR SHALL DEVELOP AND IMPLEMENT A TRAFFIC CONTROL PLAN CONSISTENT WITH THE "MANUAL ON UNIFORM TRAFFIC CONTROL DEVICES" PUBLISHED BY THE U.S. DEPARTMENT OF TRANSPORTATION, FEDERAL HIGHWAY ADMINISTRATION, AND SUBMIT TO THE COUNTY ENGINEER FOR APPROVAL.

9. IN THE EVENT THE CONTRACTOR DISCOVERS ANY ERRORS OR OMISSIONS IN THE PLANS HE SHALL IMMEDIATELY NOTIFY THE ENGINEER AND/OR OWNER OR OWNER'S AGENT.

10. CONTRACTOR SHALL PRESERVE AND PROTECT ALL PERMANENT REFERENCE MONUMENTS, PERMANENT CONTROL POINTS, PERMANENT BENCH MARKS AND PROPERTY CORNERS. IN THE EVENT THE MONUMENTS, POINTS OR MARKERS ARE DISTURBED THE CONTRACTOR SHALL EMPLOY A FLORIDA REGISTERED LAND SURVEYOR TO RESET OR REPLACE THEM.

11. THE OWNER, OWNER'S AGENT AND INSPECTORS OF APPLICABLE GOVERNMENT JURISDICTIONS, SHALL AT ALL TIMES HAVE ACCESS TO THE WORK WHEREVER AND WHENEVER IT IS IN PREPARATION OR PROGRESS; AND THE CONTRACTOR SHALL PROVIDE PROPER FACILITIES FOR SUCH ACCESS AND FOR THE INSPECTION.

12. IT IS THE CONTRACTOR'S RESPONSIBILITY TO TAKE ALL REASONABLE AND PRUDENT PRECAUTIONS TO INSURE THAT ALL COMPLETED WORK, MATERIALS AND EQUIPMENT STORED ON SITE ARE SAFE AND SECURED FROM UNAUTHORIZED ACCESS, USE, THEFT, OR VANDALISM. SUCH PRECAUTIONS MAY INCLUDE INSTALLATION OF SIGNS, FENCES, OR POSTING OF SECURITY GUARDS.

13. CONTRACTOR SHALL, AT ALL TIMES, UTILIZE ALL NORMALLY ACCEPTED AND REASONABLY EXPECTED SAFETY PRACTICES AND COMPLY WITH ALL FEDERAL, STATE AND LOCAL REGULATIONS, ORDINANCES AND GUIDELINES PERTAINING TO SAFE UTILIZATION OF EQUIPMENT OR MATERIALS AS PUBLISHED BY THEIR MANUFACTURER'S.

14. PRIOR TO INITIATING ANY EXCAVATION (INCLUDING BUT NOT LIMITED TO TUNNELS, DITCHES, STORM WATER PONDS, CANALS, ARTIFICIAL LAKES) CONTRACTOR SHALL INSTALL FENCES AND/OR TAKE ALL OTHER REASONABLE AND PRUDENT STEPS TO INSURE THAT ACCESS TO EXCAVATION BY UNAUTHORIZED PERSONNEL IS PREVENTED.

15. CONTRACTOR SHALL COMPLY IN EVERY RESPECT WITH THE PROVISIONS OF THE FLORIDA STATE TRENCH SAFETY ACT.

16. THE CONTRACTOR SHALL TAKE ALL REASONABLE PRECAUTIONS FOR THE SAFETY OF, AND SHALL PROVIDE ALL REASONABLE PROTECTION TO PREVENT DAMAGE, INJURY OR LOSS TO:

    A. ALL EMPLOYEES ON THE WORK AND ALL OTHER PERSONS WHO MAY BE AFFECTED THEREBY;

    B. ALL THE WORK AND ALL MATERIALS AND EQUIPMENT TO BE INCORPORATED THEREIN, WHETHER IN STORAGE ON OR OFF THE SITE, UNDER THE CARE, CUSTODY OR CONTROL OF THE CONTRACTOR OR ANY OF ITS SUBCONTRACTORS;

    C. OTHER PROPERTY AT THE SITE OR ADJACENT THERETO, INCLUDING TREES, SHRUBS, LAWNS, WALKS, PAVEMENTS, ROADWAY, STRUCTURES AND UTILITIES NOT DESIGNATED FOR DEMOLITION IN THE COURSE OF CONSTRUCTION.

17. THE CONTRACTOR SHALL COMPLY WITH ALL APPLICABLE SAFETY CODES AND WITH ALL APPLICABLE LAWS, ORDINANCES, RULES, REGULATIONS AND LAWFUL ORDERS OF ANY PUBLIC, QUASI PUBLIC OR OTHER AUTHORITY HAVING JURISDICTION FOR THE SAFETY OF PERSONS OR PROPERTY OR FOR THEIR PROTECTION AGAINST DAMAGE, INJURY OR LOSS, OR DESIGNED TO PROTECT THE ENVIRONMENT. THE CONTRACTOR SHALL ERECT AND MAINTAIN, AS REQUIRED BY EXISTING CONDITIONS AND PROGRESS OF THE WORK, ALL REASONABLE SAFEGUARDS FOR SAFETY AND PROTECTION, INCLUDING POSTING DANGER SIGNS AND OTHER WARNINGS AGAINST HAZARDS, PROMULGATING SAFETY REGULATIONS AND NOTIFYING OWNERS AND USERS OF ADJACENT UTILITIES OF THE EXISTENCE OF HAZARDS AND OF THE SAFETY REGULATIONS.

18. ALL DAMAGE OR LOSS TO ANY PROPERTY CAUSED IN WHOLE OR IN PART BY THE CONTRACTOR, A SUBCONTRACTOR, OR BY ANYONE FOR WHOSE ACTS ANY OF THEM MAY BE LIABLE, SHALL BE REMEDIED BY THE CONTRACTOR, EXCEPT DAMAGE OR LOSS PROPERLY ATTRIBUTABLE SOLELY TO THE ACTS OR OMISSIONS OF THE OWNER, OR THE ENGINEER OR ANYONE EMPLOYED BY THEM, OR FOR WHOSE ACTS ANY OF THEM MAY BE LIABLE, AND NOT PROPERLY ATTRIBUTABLE IN WHOLE OR IN PART, TO THE FAULT OR NEGLIGENCE OF THE CONTRACTOR.

19. THOSE PARTS OF WORK IN PLACE WHICH ARE SUBJECT TO DAMAGE BECAUSE OF OPERATIONS BEING CARRIED ON ADJACENT THERETO SHALL BE COVERED, BOARDED UP OR SUBSTANTIALLY ENCLOSED WITH ADEQUATE PROTECTION BY THE CONTRACTOR AT CONTRACTOR'S EXPENSE.

20. UNTIL FINAL ACCEPTANCE OF THE WORK BY OWNER, THE CONTRACTOR SHALL HAVE THE CHARGE AND CARE OF AND SHALL BEAR THE RISK OF INJURY OR DAMAGE, LOSS OR EXPENSE TO ANY PART THEREOF, OR TO ANY MATERIALS STORED ON SITE, BY THE ACTION OF THE ELEMENTS OR FROM ANY OTHER CAUSE WHETHER ARISING FROM THE EXECUTION OR NON-EXECUTION OF THE WORK. THE CONTRACTOR SHALL REBUILD, REPAIR, RESTORE AND MAKE GOOD ALL INJURIES OR DAMAGES TO ANY PORTION OF THE WORK OCCASIONED BY ANY OF THE ABOVE CAUSES BEFORE FINAL ACCEPTANCE AND SHALL BEAR THE EXPENSES THEREOF.

21. ADEQUATE TRAFFIC CONTROL, BARRICADES AND FLAGMAN SERVICES SHALL BE FURNISHED AND MAINTAINED BY THE CONTRACTOR AT ALL POINTS WHERE CONVEYING EQUIPMENT ENGAGED ON THE WORK REGULARLY ENTERS ONTO OR CROSSES TRAFFIC-CARRYING ROADS.

22. THE CONTRACTOR SHALL COMPLY IN EVERY RESPECT WITH THE FEDERAL OCCUPATIONAL HEALTH AND SAFETY ACT OF 1970 AND ALL RULES AND REGULATIONS NOW OR HEREAFTER IN EFFECT UNDER SAID ACT, AND THE CONTRACTOR FURTHER AGREES TO COMPLY WITH ANY AND ALL APPLICABLE STATE LAWS AND REGULATIONS PERTAINING TO JOB SAFETY AND HEALTH.

23. CONTRACTOR AND ITS SUBCONTRACTORS SHALL USE, HANDLE, TRANSPORT, AND DISPOSE OF ALL MATERIALS (HAZARDOUS OR OTHERWISE) IN COMPLIANCE WITH ALL PRESENT FEDERAL, STATE AND LOCAL ENVIRONMENTAL, HEALTH OR SAFETY LAW, INCLUDING, BUT NOT LIMITED TO, ALL SUCH STATUTES, REGULATIONS, RULES, ORDINANCES, CODES, AND RULES OF COMMON LAW.

24. CONTRACTOR FURTHER AGREES THAT CONTRACTOR AND ITS SUBCONTRACTORS SHALL NOT CAUSE THE DISCHARGE, RELEASE OR DISPOSAL OF ANY HAZARDOUS MATERIAL CREATED BY ITS WORK ON OR ABOUT THE JOB SITE. IN THE EVENT OF ANY SPILL, RELEASE OR ANY OTHER REPORTABLE OCCURRENCE, CONTRACTOR SHALL NOTIFY THE APPROPRIATE GOVERNMENTAL AGENCY AND SHALL TAKE SUCH ACTION AS MAY BE NECESSARY TO MINIMIZE THE DELETERIOUS EFFECT OF SUCH SPILL ON PERSONS OR PROPERTY.

25. THE CONTRACTOR SHALL PROTECT AND KEEP OWNER (INCLUDING THEIR AGENTS AND EMPLOYEES) FREE AND HARMLESS FROM ANY AND ALL LIABILITY, PUBLIC OR PRIVATE, PENALTIES, CONTRACTUAL OR OTHERWISE, LOSSES, DAMAGES, COSTS, ATTORNEY'S FEES, EXPENSES, CAUSES OF ACTION, CLAIMS OR JUDGMENTS RESULTING FROM THE FEDERAL OCCUPATIONAL SAFETY AND HEALTH ACT OF 1970 AS AMENDED OR ANY RULE OR REGULATION PROMULGATED THEREUNDER OR OF ANY STATE LAWS OR REGULATIONS PERTAINING TO JOB SAFETY AND HEALTH ARISING OUT OF OR IN ANY WAY CONNECTED WITH THE PERFORMANCE OF WORK OR WORK TO BE PERFORMED UNDER THIS CONTRACT, AND CONTRACTOR SHALL INDEMNIFY OWNER FROM ANY SUCH CLAIMS, PENALTIES, SUITS OR ACTIONS, PUBLIC OR PRIVATE, ADMINISTRATIVE OR JUDICIAL, INCLUDING ATTORNEY'S FEES PAID OR INCURRED BY OR ON BEHALF OF OWNER, JOINTLY OR SEVERALLY, AND/OR THEIR AGENTS AND EMPLOYEES. THE CONTRACTOR FURTHER AGREES, IN THE EVENT OF A CLAIMED VIOLATION OF ANY FEDERAL OR STATE SAFETY AND HEALTH LAW OR REGULATION ARISING OUT OF OR IN ANY WAY CONNECTED WITH THE PERFORMANCE OF WORK OR WORK TO BE PERFORMED UNDER THIS CONTRACT, OWNER MAY IMMEDIATELY TAKE WHATEVER ACTION IS DEEMED NECESSARY BY OWNER TO REMEDY THE CLAIMED VIOLATION. ANY AND ALL COSTS OR EXPENSES PAID OR INCURRED BY OWNER IN TAKING SUCH ACTION SHALL BE BORNE BY CONTRACTOR, AND CONTRACTOR AGREES TO PROTECT, HOLD HARMLESS AND INDEMNIFY OWNER AGAINST ANY AND ALL SUCH COSTS OR EXPENSES.

26. CONTRACTOR AND ITS SUBCONTRACTORS SHALL, UPON COMPLETION OF PERFORMANCE OF ALL DUTIES UNDER THIS CONTRACT, REMOVE ALL SUPPLIES, MATERIALS, AND WASTE CONTAINING AND HAZARDOUS MATERIAL FROM THE JOB SITE. CONTRACTOR SHALL BEAR FULL FINANCIAL RESPONSIBILITY, AS BETWEEN THE PARTIES OF THIS CONTRACT, FOR THE COMPLIANCE OF CONTRACTOR AND ITS SUBCONTRACTORS WITH THE PROVISIONS OF THIS CONTRACT.

27. CONTRACTOR AGREES TO INDEMNIFY, DEFEND, PROTECT AND HOLD THE OWNER HARMLESS FROM AND AGAINST ANY CLAIMS INCLUDING, WITHOUT LIMITATION, ACTUAL ATTORNEY'S FEES AND ANY COSTS OF INVESTIGATION, SOILS TESTING, GOVERNMENTAL APPROVALS, REMEDIATION AND CLEANUP ARISING OUT OF OR IN ANY WAY CONNECTED WITH THE FAILURE OF CONTRACTOR OR ITS SUBCONTRACTORS, OR THEIR AGENTS, EMPLOYEES, OFFICERS, OR REPRESENTATIVES, TO COMPLY WITH THE TERMS OF THESE CONSTRUCTION DOCUMENTS.

28. SHOULD CONTRACTOR OR ITS SUBCONTRACTORS DISCHARGE, RELEASE OR DISPOSE OF ANY HAZARDOUS MATERIAL ON OR ABOUT THE JOB SITE IN VIOLATION OF THESE CONSTRUCTION DOCUMENTS, CONTRACTOR SHALL IMMEDIATELY SO INFORM OWNER & ENGINEER IN WRITING. IN THE EVENT OF ANY SPILL, RELEASE OR ANY OTHER REPORTABLE OCCURRENCE, CONTRACTOR SHALL NOTIFY THE APPROPRIATE GOVERNMENTAL AGENCY, OWNER & ENGINEER AND SHALL TAKE SUCH ACTION AS MAY BE NECESSARY TO MINIMIZE THE DELETERIOUS EFFECT OF SUCH SPILL ON PERSONS OR PROPERTY.

29. IN THE EVENT CONTRACTOR OR ITS SUBCONTRACTORS ENCOUNTER ON THE PREMISES ANY PIPELINE, UNDERGROUND STORAGE TANK OR OTHER CONTAINER, OF ANY KIND, THAT MAY CONTAIN A HAZARDOUS MATERIAL, OR ENCOUNTER MATERIAL REASONABLY BELIEVED TO BE A HAZARDOUS MATERIAL, CONTRACTOR SHALL IMMEDIATELY STOP WORK IN THE AREA AFFECTED AND REPORT THE CONDITION TO OWNER AND/OR ENGINEER IN WRITING.

30. "HAZARDOUS MATERIAL" MEANS ANY SUBSTANCE: (A) THE PRESENCE OF WHICH REQUIRES INVESTIGATION OR REMEDIATION UNDER ANY PRESENT FEDERAL, STATE OR LOCAL STATUTE, REGULATION, ORDINANCE, RULE, CODE, ORDER, ACTION, POLICY OR COMMON LAW, OR (B) WHICH IS OR BECOMES DEFINED AS A "HAZARDOUS WASTE," "HAZARDOUS SUBSTANCE," POLLUTANT OR CONTAMINANT UNDER ANY PRESENT FEDERAL, STATE OR LOCAL STATUTE, REGULATION, RULE OR ORDINANCE OR AMENDMENTS THERETO INCLUDING, WITHOUT LIMITATION, THE COMPREHENSIVE ENVIRONMENTAL RESPONSE COMPENSATION AND LIABILITY ACT (42 U.S.C. SECTIONS 9601 ET SEQ.) AND/OR THE RESOURCE CONSERVATION AND RECOVERY ACT (42 U.S.C. SECTIONS 6901 ET SEQ.), OR (C) WHICH IS TOXIC, EXPLOSIVE, CORROSIVE, FLAMMABLE, INFECTIOUS, RADIOACTIVE, CARCINOGENIC, MUTAGENIC, OR OTHERWSE HAZARDOUS AND IS REGULATED BY ANY GOVERNMENTAL AUTHORITY, AGENCY, DEPARTMENT, COMMISSION, BOARD, AGENCY OR INSTRUMENTALITY OF THE UNITED STATES, THE STATE IN WHICH THE PREMISES ARE LOCATED OR ANY POLITICAL SUBDIVISION THEREOF, OR (D) THE PRESENCE OF WHICH ON THE PREMISES CAUSES OR THREATENS TO CAUSE A NUISANCE UPON THE PREMISES OR TO ADJACENT PROPERTIES OR POSES OR THREATENS TO POSE A HAZARD TO THE HEALTH OR SAFETY OF PERSONS ON OR ABOUT THE PREMISES, OR (E) WHICH CONTAINS GASOLINE, DIESEL FUEL OR OTHER PETROLEUM HYDROCARBONS, OR (F) WHICH CONTAINS POLYCHLORINATED BIPHENYLS (PCBS), ASBESTOS, LEAD OR UREA FORMALDEHYDE FOAM INSULATION.

31. THE CONTRACTOR SHALL FIELD LOCATE ALL EXISTING UTILITIES AS TO SIZE, LOCATION, AND ELEVATION. THE CONTRACTOR SHALL NOTIFY THE ENGINEER OF ANY AND ALL CONFLICTS, DEVIATIONS OR OMISSIONS TO THESE CONSTRUCTION DRAWINGS PRIOR TO BEGINNING CONSTRUCTION.

32. IF ANY TESTING, INSPECTION OR APPROVAL REVEAL DEFECTIVE WORK, CONTRACTOR SHALL NOT BE ALLOWED TO RECEIVE ANY ASSOCIATED COSTS AND THE OWNER SHALL BE ENTITLED TO DEDUCT FROM THE CONTRACT PRICE, BY ISSUING A CHANGE ORDER, OWNER'S COSTS ARISING OUT OF THE DEFECTIVE WORK, INCLUDING COSTS OF REPEATED PROCEDURES, COMPENSATION FOR ENGINEER'S AND DESIGN ENGINEER'S SERVICES AND ALL OTHER RELATED COSTS.

## ADDITIONAL NOTES

1. COORDINATE DATA AND HORIZONTAL ROTATION ARE RELATIVE TO FLORIDA STATE PLANE COORDINATE SYSTEM, EAST ZONE, NAD 83/90, ESTABLISHED BY STATE PLANE COORDINATES PROVIDED IN CERTIFIED CORNER RECORDS FOR SECTION CORNERS SHOWN HEREON.

2. BEARINGS SHOWN HEREON ARE BASED ON THE NORTH LINE OF THE NORTHEAST 1/4 OF SECTION 20, TOWNSHIP 21 SOUTH, RANGE 28 EAST, THAT BEARING BEING S 89°56'42" E.

3. ELEVATIONS SHOWN HEREON ARE BASED ON ORANGE COUNTY BENCHMARK "L1549006", ELEVATION=95.293. ALL ELEVATIONS ARE RELATIVE TO NAVD 88 DATUM.

4. ALL TRAFFIC CONTROL DEVICES AND SIGNAGE SHALL MEET OR EXCEED CURRENT F.D.O.T. AND MUNICIPALITY SPECIFICATIONS, AND MEET THE REQUIREMENTS OF CHAPTER 316 FLORIDA STATUTES.

5. ALL WORK SHALL BE IN ACCORDANCE WITH CURRENT MUNICIPALITY STANDARDS AND SPECIFICATIONS. IF A CONFLICT OCCURS THE CONTRACTOR SHALL NOTIFY THE ENGINEER FOR A DETERMINATION.

6. THE CONTRACTOR SHALL BE RESPONSIBLE FOR COORDINATION WITH ANY OTHER CONTRACTORS WHO MAY BE PERFORMING WORK AT THE PROJECT SITE.

7. EXISTING FACILITIES THAT ARE NOT SHOWN TO BE DEMOLISHED AND ARE DISTURBED BY CONSTRUCTION ACTIVITIES SHALL BE RESTORED TO A CONDITION EQUIVALENT TO THAT WHICH EXISTED PRIOR TO COMMENCEMENT OF CONSTRUCTION. NO SEPARATE PAYMENT WILL BE MADE FOR THIS WORK.

8. THE CONTRACTOR SHALL KEEP AND MAINTAIN ON THE JOB SITE AN ACCURATE & UP TO DATE SET OF AS-BUILT DRAWINGS. THESE DRAWINGS SHALL INCLUDE LOCATIONS AND ELEVATIONS OF MAINS, FITTINGS, VALVES, SERVICES, CASINGS, AND OTHER APPURTENANCES AS WELL AS ANY DEVIATIONS FROM THAT WHICH IS SHOWN IN THE PLANS. THESE AS-BUILT DRAWINGS SHALL BE SUBMITTED TO THE OWNER'S REPRESENTATIVE UPON COMPLETION OF THE WORK FOR HIS REVIEW AND USE.

9. THE CONTRACTOR SHALL MAINTAIN COPIES OF ALL APPLICABLE PERMITS ON-SITE AND SHALL BE RESPONSIBLE TO ADHERE TO ALL PERMIT CONDITIONS DURING CONSTRUCTION.

10. CONTRACTOR IS RESPONSIBLE FOR IDENTIFYING & OBTAINING ALL REQUIRED PERMITS AS REQUIRED BY ALL REGULATORY AUTHORITIES.

11. ALL REINFORCED CONCRETE PIPE (RCP) SHALL BE CLASS III UNLESS OTHERWISE SPECIFIED.

12. ALL EARTHWORK SHALL BE SODDED/SEEDED UNLESS OTHERWISE NOTED.

## HANDICAP ACCESSIBILITY NOTES:

1. ALL CONSTRUCTION MUST MEET OR EXCEED ALL REQUIREMENTS AS OUTLINED IN THE AMERICANS WITH DISABILITIES ACT (ADA) AND THE FLORIDA ACCESSIBILITY CODE, MOST RECENT EDITIONS. BOTTOM OF CURB RAMP ELEVATION (B.O. RAMP) IS RELATIVE TO EACH CURB RAMP CONDITION. ACTUAL ELEVATIONS SHALL BE BASED ON EXISTING GRADE OF CURB FLOW LINE AT THE B.O. RAMPS.

2. TOP OF CURB ELEVATION ADJACENT TO B.O. RAMP = 0.50 FT. MAX. UNLESS OTHERWISE NOTED.

3. ADA REQUIREMENTS SUPERSEDE SPOT GRADES AT LOT LINES. CONTRACTOR TO CUT BACK SLOPE AT 3:1 OR FLATTER AS NEEDED FOR RAMP AND SIDEWALK CONNECTION.

4. REFER TO PLAN SHEETS AND SECTIONS FOR LOCATIONS AND SIDEWALK WIDTHS.

5. THE DETECTABLE WARNING STRIP SHALL CONSIST OF A 24 INCH WIDE TACTILE PATTERN OF RAISED TRUNCATED DOMES (ALIGNED PATTERN). DOMES SHALL HAVE A DIAMETER OF 0.9 INCH, A HEIGHT OF 0.2 INCH, AND A CENTER TO CENTER SPACING OF 2.35 INCHES. THE RAMP DETECTABLE WARNING STRIP SHALL BE CONTRASTING IN COLOR. THE MATERIAL USED TO PROVIDE CONTRAST SHALL CONTRAST BY AT LEAST 70%.

6. THE CROSS SLOPE OF RAMP SURFACES AND ADJACENT STREET GRADES SHALL BE NO MORE THAN 1:50 OR 2% MAXIMUM.

7. CURB RAMPS CONSTRUCTED BY THE CONTRACTOR SHALL MEET ALL CURRENT APPLICABLE A.D.A. REQUIREMENTS AND SHALL HAVE DETECTABLE WARNING COMPLYING WITH A.D.A. REQUIREMENTS. ACCESSIBILITY ROUTES SHALL MEET ALL APPLICABLE A.D.A. REQUIREMENTS.

8. CONTRACTOR TO REFER TO MUNICIPALITY DETAILS AS NEEDED.

9. DRIVEWAY/ROADWAY CROSS SLOPES AT CROSSWALKS SHALL BE MAXIMUM 2% PER ADA REQUIREMENTS.

10. SIDEWALK CROSS SLOPES SHALL BE MAXIMUM 2% PER ADA REQUIREMENTS.

11. CURB RAMP FLARES & LANDINGS SHALL MEET ADA REQUIREMENTS.

12. ACCESSIBLE ROUTE WITH RUNNING SLOPES GREATER THAN 1:20 IS A RAMP AND SHALL COMPLY WITH ADA RAMP REQUIREMENTS.

13. IT IS THE CONTRACTORS SOLE RESPONSIBILITY TO MEET ALL CURRENT ADA STANDARDS. CONTRACTOR SHALL REFER TO FDOT STANDARDS. (INDEX 304, MOST CURRENT EDITION)

## RECORD DRAWING AS-BUILT REQUIREMENTS:

AS-BUILT DRAWINGS SHALL BE PREPARED BY AND CERTIFIED (SIGNED AND SEALED) BY A REGISTERED SURVEYOR, AND SHALL BE PROVIDED TO THE ENGINEER OF RECORD UPON COMPLETION OF THE PROJECT SITE IMPROVEMENTS A MINIMUM OF 1 WEEK PRIOR TO CONTRACTORS ATTEMPT FOR FINAL CERTIFICATE OF OCCUPANCY (CO). AS-BUILT DRAWINGS SHALL REFLECT ANY CHANGES TO THE IMPROVEMENTS MADE DURING CONSTRUCTION AND MUST MEET THE MINIMUM REQUIREMENTS OF ALL REGULATORY AGENCIES HAVING JURISDICTION AS WELL AS THE CRITERIA OUTLINED BELOW. BOTH THE ORIGINAL DESIGN AND REVISED AS-BUILT DATA, AS APPLICABLE, MUST BE CLEARLY SHOWN. THE AS-BUILT DRAWINGS MUST BE CLEARLY LABELED AS AS-BUILT OR RECORD DRAWING. THE FOLLOWING INFORMATION, AT A MINIMUM, SHALL BE CERTIFIED ON THE AS-BUILT DRAWINGS:

WATER DISTRIBUTION SYSTEM:

A. LOCATION AND DIMENSIONS OF PIPES, VALVES, FITTINGS, CHANGE OF DIRECTION, AND OTHER ASSOCIATED FACILITIES.

WASTEWATER COLLECTION/TRANSMISSION SYSTEM:

A. LOCATION, DIMENSION, AND INVERT ELEVATIONS OF PIPES, MANHOLES (INCLUDING RIM ELEVATION), LIFTSTATION, FORCEMAIN, FITTINGS, CHANGE IN DIRECTION AND OTHER ASSOCIATED FACILITIES.

PAVING AND DRAINAGE SYSTEM:

A. DIMENSIONS AND ELEVATIONS OF ALL DISCHARGE STRUCTURES INCLUDING ALL WEIRS, SLOTS, GATES, PIPES, AND SKIMMERS;

B. LOCATIONS, DIMENSIONS, AND ELEVATIONS OF ALL FILTER, EXFILTRATION, OR UNDERDRAIN SYSTEMS INCLUDING CLEANOUTS, PIPES, CONNECTIONS TO CONTROL STRUCTURES, AND POINTS OF DISCHARGE TO THE RECEIVING WATERS;

C. DIMENSIONS, ELEVATIONS, CONTOURS, OR CROSS-SECTIONS OF ALL STORMWATER TREATMENT POND STORAGE AREAS SUFFICIENT TO DETERMINE STAGE-STORAGE RELATIONSHIPS OF THE STORAGE AREA, AND THE POND DEPTH AND VOLUME BELOW THE CONTROL WATER ELEVATION FOR NORMALLY WET SYSTEMS;

D. DIMENSIONS, ELEVATIONS, CONTOURS, FINAL GRADES, OR CROSS-SECTIONS OF THE DRAINAGE SYSTEM IMPROVEMENTS TO DETERMINE FLOW DIRECTIONS AND CONVEYANCE OF RUNOFF TO THE TREATMENT SYSTEM;

E. DIMENSIONS, ELEVATIONS, CONTOURS, FINAL GRADES, OR CROSS-SECTIONS OF ALL CONVEYANCE SYSTEMS UTILIZED TO CONVEY OFF-SITE RUNOFF AROUND THE SYSTEM;

F. EXISTING WATER ELEVATION OF SURFACE WATERS AND THE DATE DETERMINED;

G. ELEVATION AND LOCATION OF BENCHMARK'S FOR THE SURVEY.

ADA FACILITIES:

A. ELEVATIONS AT THE FOUR CORNERS OF ALL HANDICAP PARKING SPACES AND ADJACENT LOADING AISLES.

B. ELEVATIONS AND LOCATIONS FOR ALL ACCESSIBLE RAMPS WHICH ADEQUATELY REFLECT THE BUILT SLOPES.

C. ELEVATIONS AND LOCATIONS ALONG THE PATHS OF CONVEYANCE FOR PEDESTRIAN TRAFFIC AND ALL ADA ACCESSIBLE ROUTES EVERY 25 FT. WHICH ADEQUATELY REFLECT THE SLOPE AND CROSS SLOPE.

Call 48 hours before you dig
It's the Law!
1-800-432-4770
Sunshine State One Call of Florida, Inc.

**SHEET 2 OF 22**

| REV. | DATE | DESCRIPTION | BY |
|---|---|---|---|
| A | 09/17/19 | CITY OF APOPKA COMMENTS DATED 09/17/19 | SCS |
| A | 08/27/19 | CITY OF APOPKA COMMENTS DATED 08/27/19 | SCS |

CIVIL ENGINEERING | LAND PLANNING
APPIAN ENGINEERING LLC.
APPIANFL.COM • 407.960.5868
2231 LEE ROAD, SUITE 27, WINTER PARK, FLORIDA 32789
STATE OF FLORIDA CERTIFICATE OF AUTHORIZATION NO. 32574

GENERAL NOTES

CENTRAL FLORIDA PREPARATORY SCHOOL
CITY OF APOPKA, FLORIDA

DRAWN: S. SIERRA-GIL
DESIGNED: L. CLASSON
CHECKED: L. CLASSON
DATE: 7/19/2019
SCALE: N.T.S
PROJECT: MMI-006
SHEET: C1.0

9/19/19

# ABBREVIATIONS

| | |
|---|---|
| **A** | |
| A | AREA |
| AB | ANCHOR BOLT |
| ABD | ABANDON(ED) |
| AC | ACRE(S) |
| AC-FT | ACRE FOOT/FEET |
| ACP | ASBESTOS CEMENT PIPE |
| ADDL | ADDITIONAL |
| ADT | AVERAGE DAILY TRAFFIC |
| AL | ALUMINUM |
| ALT | ALTERNATE |
| AM | BEFORE NOON |
| AMP | AMPERE(S) |
| APPROX | APPROXIMATE |
| ARV | AIR RELEASE VALVE |
| ARVV | AIR RELEASE VACUUM VALVE |
| ASPH | ASPHALT |
| ASSY | ASSEMBLY |
| AVE | AVENUE |
| AVG | AVERAGE |
| AZ | AZIMUTH |
| **B** | |
| BFP | BACKFLOW PREVENTER |
| BL | BASELINE |
| BLDG | BUILDING |
| BLVD | BOULEVARD |
| BM | BENCH MARK |
| BND | BOUNDARY |
| BO | BLOWOFF |
| BOC | BACK OF CURB |
| BOT | BOTTOM |
| BRG | BEARING |
| BS | BOTTOM OF SLOPE |
| BV | BUTTERFLY VALVE |
| **C** | |
| CAP | CAPACITY |
| CB | CATCH BASIN |
| CC | CENTER TO CENTER |
| CEM | CEMENT |
| CF | CUBIC FEET |
| CFM | CUBIC FEET PER MINUTE |
| CFS | CUBIC FEET PER SECOND |
| C&G | CURB AND GUTTER |
| CI | CAST IRON |
| CIP | CAST IRON PIPE |
| CJ | CONSTRUCTION JOINT |
| C/L | CENTER LINE |
| CLP | CONCRETE LIGHT POLE |
| CLR | CLEAR/CLEARANCE |
| CLS | CLASS |
| CM | CONCRETE MONUMENT |
| CMP | CORRUGATED METAL PIPE |
| CMPA | CORRUGATED METAL PIPE ARCH |
| CND | CONDUIT |
| CO. | COUNTY |
| CO | CLEANOUT |
| COL | COLUMN |
| COMP | COMPLETE |
| CONC | CONCRETE |
| CONN | CONNECTION |
| CONST | CONSTRUCT(ION) |
| CONT | CONTINUOUS |
| COORD | COORDINATE(S) |
| COR | CORNER |
| CPLG | COUPLING |
| CPP | CONCRETE POWER POLE |
| CS | CONTROL STRUCTURE |
| CTG | COATING |
| CTR | CENTER |
| CTV | CABLE TELEVISION |
| CULV | CULVERT |
| CY | CUBIC YARD |
| CYL | CYLINDER |
| **D** | |
| DBL | DOUBLE |
| DEG OR ° | DEGREE |
| DEFL | DEFLECT(ION) |
| DEPT | DEPARTMENT |
| DET | DETAIL |
| DHWL | DESIGN HIGH WATER LEVEL |
| DI | DUCTILE IRON |
| DIA | DIAMETER |
| DIAG | DIAGONAL |
| DIM | DIMENSION |
| DIP | DUCTILE IRON PIPE |
| DISCH | DISCHARGE |
| DIST | DISTANCE |
| DMH | DROP MANHOLE |
| DN | DOWN |
| DRN | DRAIN |
| DWG | DRAWING |
| DWY | DRIVEWAY |
| **E** | |
| | EAST |
| EA | EACH |
| EC | EDGE OF CONCRETE |
| ED | ENERGY DISSIPATOR |
| EF | EACH FACE |
| EFF | EFFLUENT |
| EG | EXISTING GRADE |
| E/L | EASEMENT LINE |
| ELB | ELBOW |
| ELEC | ELECTRIC |
| ELEV | ELEVATION |
| ELLIP | ELLIPSE/ELLIPTICAL |
| ENC | ENCASEMENT |
| ENG | ENGINEER(ING) |
| EOP | EDGE OF PAVEMENT |
| EQ | EQUAL/EQUATION |
| EQUIP | EQUIPMENT |
| EQUIV | EQUIVALENT |
| ESMT | EASEMENT |
| EST | ESTIMATE |
| EW | EACH WAY |
| EWL | ENDWALL |
| EXC | EXCAVATE/EXCAVATION |
| EXIST | EXISTING |
| EXP | EXPAND/EXPANSION |
| EXT | EXTEND/EXTENSION |
| **F** | |
| F&C | FRAME AND COVER |
| FD | FLOOR DRAIN |
| FDC | FIRE DEPARTMENT CONNECTION |
| FDN | FOUNDATION |
| FDOT | FLORIDA DEPARTMENT OF TRANSPORTATION |
| FF | FINISHED FLOOR |
| FG | FINISHED GRADE |
| FH | FIRE HYDRANT |
| F&I | FURNISH AND INSTALL |
| FIG | FIGURE |
| FIN | FINISHED |
| FIT | FITTING |
| FL | FENCE LINE |
| FLR | FLOOR |
| FLEX | FLEXIBLE |
| FLG | FLANGE |
| FM | FORCE MAIN |
| FND | FOUND |
| FPH | FEET PER HOUR |
| FPM | FEET PER MINUTE |
| FPS | FEET PER SECOND |
| FT | FEET/FOOT |
| FTG | FOOTING |
| **G** | |
| GA | GAUGE |
| GAL | GALLON |
| GALV | GALVANIZED |
| GM | GAS MAIN |
| GPD | GALLONS PER DAY |
| GPH | GALLONS PER HOUR |
| GPM | GALLONS PER MINUTE |
| GPS | GALLONS PER SECOND |
| GR | GUARD RAIL |
| GRD | GROUND/GRADE |
| GSP | GALVANIZED STEEL PIPE |
| GV | GATE VALVE |
| GV&B | GATE VALVE AND BOX |
| GW | GUY WIRE |
| GWT | GROUND WATER TABLE |
| **H** | |
| HB | HOSE BIBB |
| HDW | HARDWARE |
| HORIZ | HORIZONTAL |
| HP | HORSEPOWER |
| HR | HOUR |
| HT | HEIGHT |
| HW | HEADWALL |
| HWL | HIGH WATER LEVEL |
| HWY | HIGHWAY |
| HYD | HYDRAULIC |
| **I** | |
| I-4 | INTERSTATE HIGHWAY |
| IA | INTERSECTION ANGLE |
| ID | INSIDE DIAMETER |
| IF | INSIDE FACE |
| IN | INCHES |
| INL | INLET |
| INS | INSERT |
| INST | INSTALL |
| IP | IRON PIPE |
| IR | IRON ROD |
| INT | INTERSECT/INTERSECTION |
| INV | INVERT |
| **J** | |
| JB | JUNCTION BOX |
| JCT | JUNCTION |
| JST | JOIST |
| JT | JOINT |
| **L** | |
| L | LENGTH |
| LAT | LATITUDE |
| LATL | LATERAL |
| LB | POUND |
| LF | LINEAR FEET/FOOT |
| LG | LONG |
| LIM | LIMIT(S) |
| LP | LIGHT POLE |
| LONG | LONG |
| LT | LEFT |
| LWL | LOW WATER LEVEL |
| **M** | |
| MAINT | MAINTENANCE |
| MATL | MATERIAL |
| MAX | MAXIMUM |
| MECH | MECHANICAL |
| ME | MITERED END |
| MFR | MANUFACTURER |
| MGD | MILLION GALLONS PER DAY |
| MH | MANHOLE |
| MHC | MANHOLE COVER |
| MHWL | MEAN HIGH WATER LEVEL |
| MIN | MINIMUM |
| MISC | MISCELLANEOUS |
| MJ | MECHANICAL JOINT |
| MLP | METAL LIGHT POLE |
| MLWL | MEAN LOW WATER LEVEL |
| MON | MONUMENT |
| MPH | MILES PER HOUR |
| MSL | MEAN SEA LEVEL |
| MTG | MOUNTING |
| **N** | |
| N | NORTH |
| NA | NOT APPLICABLE |
| N&C | NAIL AND CAP |
| NE | NORTHEAST |
| NG | NATURAL GROUND |
| NIC | NOT IN CONTRACT |
| NO OR # | NUMBER |
| NOM | NOMINAL |
| NTP | NOTICE TO PROCEED |
| NTS | NOT TO SCALE |
| NW | NORTHWEST |
| NWL | NORMAL WATER LEVEL |
| **O** | |
| OC | ON CENTER |
| OD | OUTSIDE DIAMETER |
| OE | OR EQUAL |
| OPNG | OPENING |
| OPP | OPPOSITE |
| ORCP | OVAL REINFORCED CONCRETE PIPE |
| OS | OUTFALL STRUCTURE |
| OVFL | OVERFLOW |
| OVHD | OVERHEAD |
| **P** | |
| PC | POINT OF CURVATURE |
| PCC | POINT OF COMPOUND CURVATURE |
| PEP | POLYETHYLENE PIPE |
| PI | POINT OF INTERSECTION |
| PIV | POST INDICATOR VALVE |
| P/L | PROPERTY LINE |
| POB | POINT OF BEGINNING |
| POJ | PUSH ON JOINT |
| POS | POINT OF SERVICE |
| PP | POWER POLE |
| PR | PHONE RISER |
| PRC | POINT OF REVERSE CURVATURE |
| PRESS | PRESSURE |
| PROJ | PROJECT |
| PROP | PROPOSED |
| PRVC | POINT OF REVERSE VERTICAL CURVE |
| PSF | POUNDS PER SQUARE FOOT |
| PSI | POUNDS PER SQUARE INCH |
| PT | POINT OF TANGENCY |
| PVC | POLYVINYL CHLORIDE |
| PVMT | PAVEMENT |
| PWR | POWER |
| **Q** | |
| Q | FLOW RATE |
| **R** | |
| R | RADIUS |
| RCP | REINFORCED CONCRETE PIPE |
| RCPA | REINFORCED CONCRETE PIPE ARCH |
| RD | ROAD |
| RDY | ROADWAY |
| RED | REDUCER |
| REF | REFERENCE |
| REINF | REINFORCE(D) |
| REQD | REQUIRED |
| REV | REVISE/REVISION |
| RPM | REVOLUTIONS PER MINUTE |
| RR | RAILROAD |
| RT | RIGHT |
| RV | RELIEF VALVE |
| R/W | RIGHT-OF-WAY |
| RWM | REUSE WATER MAIN |
| **S** | |
| S | SOUTH |
| SAN | SANITARY SEWER |
| SB | SPLASH BLOCK |
| SCH | SCHEDULE |
| SD | SIDE DRAIN |
| SDN | SHELF DRAIN |
| SE | SOUTHEAST |
| SEC | SECONDS |
| SECT | SECTION |
| SH | SHEET |
| SHGWT | SEASONAL HIGH GROUND WATER TABLE |
| SIM | SIMILAR |
| S/L | SETBACK LINE |
| SL | SLOPE |
| SM | SHEET METAL |
| SPEC | SPECIFICATION(S) |
| SQ | SQUARE |
| SQ IN | SQUARE INCH(ES) |
| SQ FT | SQUARE FOOT/FEET |
| SQ YD | SQUARE YARD(S) |
| SR | STATE ROAD |
| SS | STAINLESS STEEL |
| ST | STREET |
| STA | STATION |
| STD | STANDARD |
| STL | STEEL |
| STR | STRUCTURE |
| STS | STORM SEWER |
| SUP | SUPPORT |
| SUSP | SUSPEND/SUSPENSION |
| SVC | SERVICE |
| SW | SOUTHWEST |
| SWK | SIDEWALK |
| SYM | SYMBOL(S) |
| SYMM | SYMMETRICAL |
| SYS | SYSTEM |
| **T** | |
| T | TANGENT |
| TB | TURFBLOCK |
| T&B | TOP AND BOTTOM |
| TBM | TEMPORARY BENCH MARK |
| TC | TIME OF CONCENTRATION |
| TD | TRENCH DRAIN |
| TDH | TOTAL DYNAMIC HEAD |
| TECH | TECHNICIAN/TECHNICAL |
| TEMP | TEMPORARY |
| TL | TERMINAL LAMPHOLE |
| TOB | TOP OF BANK |
| TOC | TOP OF CURB |
| TOS | TOE OF SLOPE |
| TOT | TOTAL |
| TS | TOP OF SLOPE |
| TWP | TOWNSHIP |
| TYP | TYPICAL |
| **U** | |
| UD | UNDERDRAIN |
| UG | UNDERGROUND |
| UON | UNLESS OTHERWISE NOTED |
| UTC | UNDERGROUND TELEPHONE CABLE |
| **V** | |
| VB | VALVE BOX |
| VC | VERTICAL CURVE |
| VCP | VITRIFIED CLAY PIPE |
| VERT | VERTICAL |
| VPC | VERTICAL POINT OF CURVE |
| VPI | VERTICAL POINT OF INTERSECTION |
| VPT | VERTICAL POINT OF TANGENCY |
| **W** | |
| W | WEST |
| W/ | WITH |
| WM | WATER MAIN |
| W/O | WITHOUT |
| WP | WATER/WEATHER PROOF |
| WPP | WOOD POWER POLE |
| WS | WATER SURFACE |
| WSWT | WET SEASON WATER TABLE |
| WT | WEIGHT |
| WV | WATER VALVE |
| WWF | WELDED WIRE FABRIC |
| WWM | WELDED WIRE MESH |
| **Y** | |
| YD | YARD |
| YR | YEAR |
| **MISC** | |
| & | AND |
| @ | AT |
| Δ | DELTA |

# EXISTING SYMBOLS

## LINES

- CENTER LINE
- CHAIN LINK FENCE
- CONTOUR
- EASEMENT
- FENCE
- GUARDRAIL
- EXISTING PLATS
- RETAINING WALL
- RIGHT-OF-WAY LINE
- SHORELINE
- SWALE
- SOIL BOUNDARY

## SANITARY SEWER

- SANITARY SEWER LINE
- CLEANOUT
- FORCE MAIN
- MANHOLE

## POTABLE WATER

- WATER MAIN
- EXISTING VALVE
- FIRE HYDRANT
- WATER METER

## STORM DRAIN

- STORM SEWER
- CURB INLET
- MANHOLE
- MITERED END
- STORM INLET
- SPOT ELEVATION
- FDOT TYPE 1 INLET
- FDOT TYPE 2 INLET
- FDOT TYPE 3 INLET
- FDOT TYPE 4 INLET
- FDOT TYPE 5 INLET
- FDOT TYPE 6 INLET

## HIGHWAY & UTILITIES

- BENCHMARK
- BOUND CORNER
- CONCRETE
- COUNTY ROADS
- INTERSTATE ROADS
- LIGHT POLE
- SIGN
- EDGE OF PAVEMENT W/O CURB
- STATE ROADS
- GUY POLE
- UTILITY POLE
- YARD LIGHT
- GAS MAIN
- OVER HEAD WIRE
- ELECTRIC CABLE OR CONDUIT, BURIED
- UNDERGROUND TELEPHONE CABLE
- EDGE OF PAVEMENT W/CURB

# PROPOSED SYMBOLS

## LINES

- PROPERTY BOUNDARY
- LOT LINE
- CENTER LINE
- EASEMENT
- BUILDING SETBACK LINE
- WETLAND LINE
- WETLAND BUFFER LINE
- FENCE
- SILT FENCE
- GUARDRAIL
- ENTRY WALL
- RETAINING WALL
- SWALE
- CONTOUR

## STORM

- 100 LF OF 24" RCP @ 0.20% — STORM PIPE
- DRAINAGE FLOW DIRECTION
- FDOT INLET TYPE 1
- FDOT INLET TYPE 2
- FDOT INLET TYPE 3
- FDOT INLET TYPE 4
- FDOT INLET TYPE 5
- FDOT INLET TYPE 6
- MANHOLE
- MITERED END SECTION
- STORM INLET
- 100.00 — SPOT ELEVATION

## SANITARY SEWER

- 100 LF OF 8" PVC @ 0.40% — SANITARY PIPE
- CLEANOUT
- SINGLE SANITARY SERVICE
- DOUBLE SANITARY SERVICE
- MANHOLE
- FORCE MAIN

## POTABLE WATER

- WATER MAIN
- SINGLE WATER SERVICE
- DOUBLE WATER SERVICE
- FIRE HYDRANT ASSEMBLY
- METER
- SAMPLE POINT
- FIRE MAIN
- FIRE DEPARTMENT CONNECTION

## RECLAIMED WATER

- RECLAIMED WATER MAIN
- SINGLE WATER SERVICE
- DOUBLE WATER SERVICE

## GENERIC UTILITIES

- 11 1/4° BEND
- 22 1/2° BEND
- 45° BEND
- 90° BEND
- TEE
- CROSS
- VALVE
- REDUCER

## ROADWAY

- CONCRETE
- BLDG OR STRUCTURE
- TYPE F CURB & GUTTER
- MIAMI CURB
- 10 / C1.0 — DETAIL REFERENCE
- LOT TYPE "A" FFE=100.00 — FINISHED FLOOR ELEVATION W/ FHA LOT TYPE
- HANDICAP PARKING
- 95 — INTERSTATE ROADS
- LIGHT POLE
- 50 — STATE ROADS
- SIGN
- TRAFFIC FLOW PAVEMENT MARKING
- UTILITY POLE
- A A — CROSS SECTION DETAIL

NOTES:

1. TREE TYPES SHALL BE REFERENCED BY LEGEND ON APPLICABLE DRAWING SHEETS.
2. EXISTING CONSTRUCTION FEATURES MAY BE SCREENED ON DRAWING SHEETS TO PROVIDE CLARITY.

Call 48 hours before you dig
It's the Law!
1-800-432-4770
Sunshine State One Call of Florida, Inc.

**SHEET 3 OF 22**

| REV. | DATE | DESCRIPTION | BY |
|---|---|---|---|
| A | 09/17/19 | CITY OF APOPKA COMMENTS DATED 09/17/19 | SCS |
| A | 08/27/19 | CITY OF APOPKA COMMENTS DATED 08/27/19 | SCS |


CIVIL ENGINEERING | LAND PLANNING
APPIAN ENGINEERING LLC.
APPIANFL.COM • 407.960.5868
2221 Lee Road, Suite 27, Winter Park, Florida 32789
STATE OF FLORIDA CERTIFICATE OF AUTHORIZATION NO. 32574


SYMBOLS AND ABBREVIATIONS

CENTRAL FLORIDA PREPARATORY SCHOOL
CITY OF APOPKA, FLORIDA

| | | | |
|---|---|---|---|
| DRAWN: S. SIERRA-GIL | DESIGNED: L. CLASSON | CHECKED: L. CLASSON | DATE: 7/10/2019 |
| SCALE N.T.S | PROJECT MMI-006 | SHEET C1.1 | |

9/19/19


P:_project drawings\mmi-006 central fl preparatory school\Drawings\cad civil3d\Layouts\04 final development plan\SYMBOLS AND ABBREVIATIONS.dwg Modified:7/10/2019 By:sierragil Plotted By:sofia sierra-gil

# SURVEYORS NOTES:

1. SURVEY MADE WITH BENEFIT OF ALTA COMMITMENT FOR TITLE INSURANCE BY FIRST AMERICAN TITLE INSURANCE COMPANY, FILE NO.: NCS-958347-ORL, ISSUING OFFICE FILE NUMBER: NCS-958347-ORL, COMMITMENT NUMBER: NCS-958347-ORL, BEARING A COMMITMENT DATE OF APRIL 10, 2019 AT 8:00 AM.
2. COORDINATE DATA AND HORIZONTAL ROTATION ARE RELATIVE TO FLORIDA STATE PLANE COORDINATE SYSTEM, EAST ZONE, NAD 83/90, ESTABLISHED BY STATE PLANE COORDINATES PROVIDED IN CERTIFIED CORNER RECORDS FOR SECTION CORNERS SHOWN HEREON.
3. BEARINGS SHOWN HEREON ARE BASED ON THE NORTH LINE OF THE NORTHEAST 1/4 OF SECTION 20, TOWNSHIP 21 SOUTH, RANGE 28 EAST, THAT BEARING BEING S 89°56'42" E.
4. ELEVATIONS SHOWN HEREON ARE BASED ON ORANGE COUNTY BENCHMARK "L1549006", ELEVATION=95.293. ALL ELEVATIONS ARE RELATIVE TO NAVD 88 DATUM.
5. ACCORDING TO FIRM PANEL NUMBER 12095 C 0120 F, DATED SEPTEMBER 25, 2009 THE SUBJECT PROPERTY LIES IN ZONE "X".
6. NO UNDERGROUND UTILITIES, FOUNDATIONS, OR OTHER BURIED FEATURES HAVE BEEN LOCATED BY THIS SURVEY, UNLESS OTHERWISE SHOWN.
7. ONLY TREES 6" DIAMETER AND LARGER (AT BREAST HEIGHT) ARE SHOWN BY THIS SURVEY. PLANTED PINES HAVE NOT BEEN LOCATED BY THIS SURVEY.
8. SUBJECT PROPERTY CONTAINS 6.39 ACRES, MORE OR LESS.
9. NO ADDRESS WAS OBSERVED WHILE CONDUCTING THE FIELDWORK FOR THIS SURVEY OR WAS DISCLOSED IN DOCUMENTS PROVIDED.
10. A ZONING REPORT OR LETTER HAS NOT BEEN PROVIDED FOR THIS SURVEY.
11. NAMES OF ADJOINING OWNERS ARE PER ORANGE COUNTY PROPERTY APPRAISER.
12. NO EVIDENCE OF RECENT EARTH MOVING WORK, BUILDING CONSTRUCTION, OR BUILDING ADDITIONS WAS OBSERVED IN THE PROCESS OF CONDUCTING THE FIELDWORK FOR THIS SURVEY.
13. NO INFORMATION REGARDING PROPOSED CHANGES IN STREET RIGHT OF WAY LINES WAS MADE AVAILABLE TO SURVEYOR.
14. NO EVIDENCE OF RECENT STREET OR SIDEWALK CONSTRUCTION OR REPAIRS WAS OBSERVED IN THE PROCESS OF CONDUCTING THE FIELDWORK FOR THIS SURVEY.
15. NO WETLAND MARKERS WERE OBSERVED IN THE THE PROCESS OF CONDCTING THE FIELDWORK FOR THIS SURVEY.
16. THIS SURVEY IS NOT VALID WITHOUT SIGNATURE AND RAISED SEAL OF A FLORIDA SURVEYOR AND MAPPER.
17. THIS SURVEY IS NOT VALID WITHOUT ALL SHEETS.

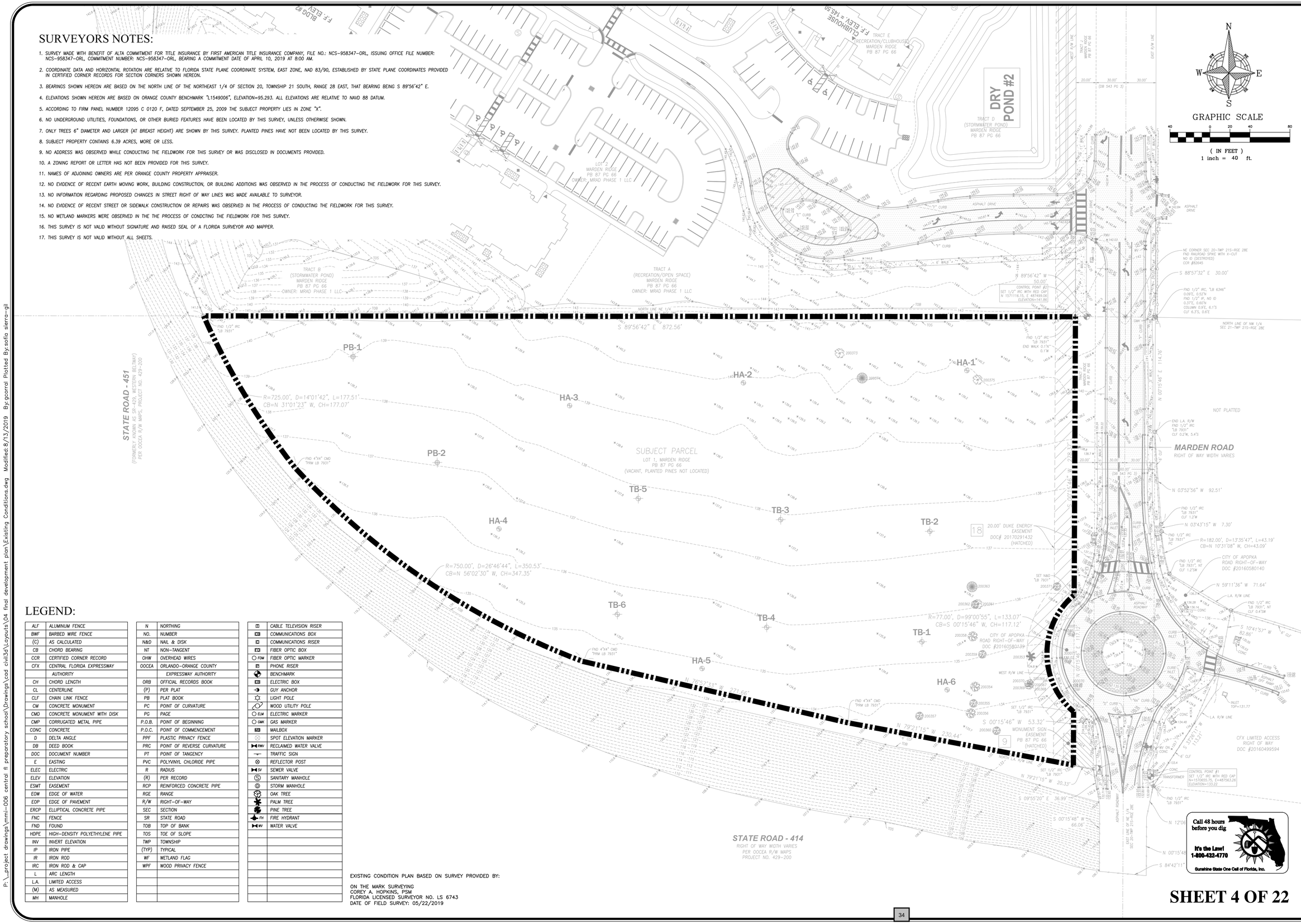


# LEGEND:

| | |
|---|---|
| ALF | ALUMINUM FENCE |
| BWF | BARBED WIRE FENCE |
| (C) | AS CALCULATED |
| CB | CHORD BEARING |
| CCR | CERTIFIED CORNER RECORD |
| CFX | CENTRAL FLORIDA EXPRESSWAY AUTHORITY |
| CH | CHORD LENGTH |
| CL | CENTERLINE |
| CLF | CHAIN LINK FENCE |
| CM | CONCRETE MONUMENT |
| CMD | CONCRETE MONUMENT WITH DISK |
| CMP | CORRUGATED METAL PIPE |
| CONC | CONCRETE |
| D | DELTA ANGLE |
| DB | DEED BOOK |
| DOC | DOCUMENT NUMBER |
| E | EASTING |
| ELEC | ELECTRIC |
| ELEV | ELEVATION |
| ESMT | EASEMENT |
| EOW | EDGE OF WATER |
| EOP | EDGE OF PAVEMENT |
| ERCP | ELLIPTICAL CONCRETE PIPE |
| FNC | FENCE |
| FND | FOUND |
| HDPE | HIGH-DENSITY POLYETHYLENE PIPE |
| INV | INVERT ELEVATION |
| IP | IRON PIPE |
| IR | IRON ROD |
| IRC | IRON ROD & CAP |
| L | ARC LENGTH |
| L.A. | LIMITED ACCESS |
| (M) | AS MEASURED |
| MH | MANHOLE |

| | |
|---|---|
| N | NORTHING |
| NO. | NUMBER |
| N&D | NAIL & DISK |
| NT | NON-TANGENT |
| OHW | OVERHEAD WIRES |
| OOCEA | ORLANDO-ORANGE COUNTY EXPRESSWAY AUTHORITY |
| ORB | OFFICIAL RECORDS BOOK |
| (P) | PER PLAT |
| PB | PLAT BOOK |
| PC | POINT OF CURVATURE |
| PG | PAGE |
| P.O.B. | POINT OF BEGINNING |
| P.O.C. | POINT OF COMMENCEMENT |
| PPF | PLASTIC PRIVACY FENCE |
| PRC | POINT OF REVERSE CURVATURE |
| PT | POINT OF TANGENCY |
| PVC | POLYVINYL CHLORIDE PIPE |
| R | RADIUS |
| (R) | PER RECORD |
| RCP | REINFORCED CONCRETE PIPE |
| RGE | RANGE |
| R/W | RIGHT-OF-WAY |
| SEC | SECTION |
| SR | STATE ROAD |
| TOB | TOP OF BANK |
| TOS | TOE OF SLOPE |
| TWP | TOWNSHIP |
| (TYP) | TYPICAL |
| WF | WETLAND FLAG |
| WPF | WOOD PRIVACY FENCE |

| | |
|---|---|
| CATV | CABLE TELEVISION RISER |
| CB | COMMUNICATIONS BOX |
| CO | COMMUNICATIONS RISER |
| FO | FIBER OPTIC BOX |
| FOM | FIBER OPTIC MARKER |
| PR | PHONE RISER |
| | BENCHMARK |
| EB | ELECTRIC BOX |
| | GUY ANCHOR |
| | LIGHT POLE |
| | WOOD UTILITY POLE |
| ELM | ELECTRIC MARKER |
| GAM | GAS MARKER |
| MB | MAILBOX |
| | SPOT ELEVATION MARKER |
| RWV | RECLAIMED WATER VALVE |
| | TRAFFIC SIGN |
| | REFLECTOR POST |
| SV | SEWER VALVE |
| SM | SANITARY MANHOLE |
| DI | STORM MANHOLE |
| | OAK TREE |
| | PALM TREE |
| | PINE TREE |
| FH | FIRE HYDRANT |
| WV | WATER VALVE |

EXISTING CONDITION PLAN BASED ON SURVEY PROVIDED BY:

ON THE MARK SURVEYING
COREY A. HOPKINS, PSM
FLORIDA LICENSED SURVEYOR NO. LS 6743
DATE OF FIELD SURVEY: 05/22/2019

**SHEET 4 OF 22**

| REV. | DATE | DESCRIPTION | BY |
|---|---|---|---|
| A | 09/17/19 | CITY OF APOPKA COMMENTS DATED 09/17/19 | SCS |
| A | 08/27/19 | CITY OF APOPKA COMMENTS DATED 08/27/19 | SCS |

CIVIL ENGINEERING | LAND PLANNING
**APPIAN ENGINEERING LLC.**
APPIANEL.COM • 407.960.5868
2221 Lee Road, Suite 27, Winter Park, Florida 32789
STATE OF FLORIDA CERTIFICATE OF AUTHORIZATION NO. 32574

EXISTING CONDITIONS

CENTRAL FLORIDA PREPARATORY SCHOOL
CITY OF APOPKA, FLORIDA

| | |
|---|---|
| DRAWN: S. SIERRA-GIL | SCALE 1" = 40' |
| DESIGNED: L. CLASSON | PROJECT MMI-006 |
| CHECKED: L. CLASSON | SHEET C1.2 |
| DATE: 8/13/2019 | |

9/19/19

P:_project drawings\mmi-006 central fl preparatory school\Drawings\cad civil3d\Layouts\04 final development plan\Existing Conditions.dwg Modified:8/13/2019 By:gcorral Plotted By:sofia sierra-gil

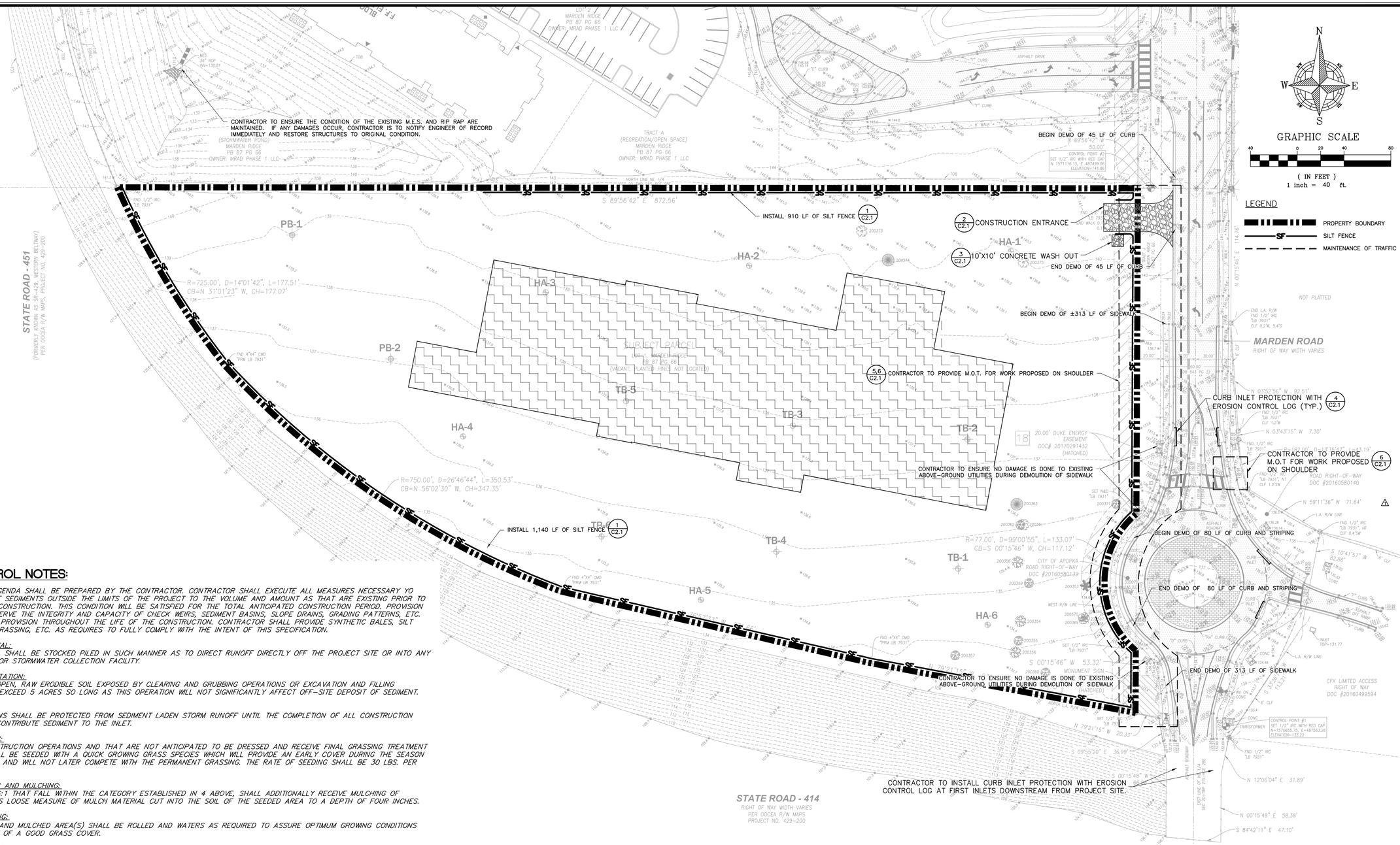


## EROSION CONTROL NOTES:

AN EROSION CONTROL AGENDA SHALL BE PREPARED BY THE CONTRACTOR. CONTRACTOR SHALL EXECUTE ALL MEASURES NECESSARY YO LIMIT THE TRANSPORT OF SEDIMENTS OUTSIDE THE LIMITS OF THE PROJECT TO THE VOLUME AND AMOUNT AS THAT ARE EXISTING PRIOR TO THE COMMENCEMENT OF CONSTRUCTION. THIS CONDITION WILL BE SATISFIED FOR THE TOTAL ANTICIPATED CONSTRUCTION PERIOD. PROVISION MUST BE MADE TO PRESERVE THE INTEGRITY AND CAPACITY OF CHECK WEIRS, SEDIMENT BASINS, SLOPE DRAINS, GRADING PATTERNS, ETC. REQUIRED TO MEET THIS PROVISION THROUGHOUT THE LIFE OF THE CONSTRUCTION. CONTRACTOR SHALL PROVIDE SYNTHETIC BALES, SILT BARRIERS, TEMPORARY GRASSING, ETC. AS REQUIRES TO FULLY COMPLY WITH THE INTENT OF THIS SPECIFICATION.

1. STOCKPILING MATERIAL:
NO EXCAVATED MATERIAL SHALL BE STOCKED PILED IN SUCH MANNER AS TO DIRECT RUNOFF DIRECTLY OFF THE PROJECT SITE OR INTO ANY ADJACENT WATER BODY OR STORMWATER COLLECTION FACILITY.

2. EXPOSED AREA LIMITATION:
THE SURFACE AREA OF OPEN, RAW ERODIBLE SOIL EXPOSED BY CLEARING AND GRUBBING OPERATIONS OR EXCAVATION AND FILLING OPERATIONS SHALL NOT EXCEED 5 ACRES SO LONG AS THIS OPERATION WILL NOT SIGNIFICANTLY AFFECT OFF-SITE DEPOSIT OF SEDIMENT.

3. INLET PROTECTION:
INLETS AND CATCH BASINS SHALL BE PROTECTED FROM SEDIMENT LADEN STORM RUNOFF UNTIL THE COMPLETION OF ALL CONSTRUCTION OPERATIONS THAT MAY CONTRIBUTE SEDIMENT TO THE INLET.

4. TEMPORARY SEEDING:
AREAS OPENED BY CONSTRUCTION OPERATIONS AND THAT ARE NOT ANTICIPATED TO BE DRESSED AND RECEIVE FINAL GRASSING TREATMENT WITHIN SEVEN DAYS SHALL BE SEEDED WITH A QUICK GROWING GRASS SPECIES WHICH WILL PROVIDE AN EARLY COVER DURING THE SEASON IN WHICH IT IS PLANTED, AND WILL NOT LATER COMPETE WITH THE PERMANENT GRASSING. THE RATE OF SEEDING SHALL BE 30 LBS. PER ACRE.

5. TEMPORARY SEEDING AND MULCHING:
SLOPES STEEPER THAN 6:1 THAT FALL WITHIN THE CATEGORY ESTABLISHED IN 4 ABOVE, SHALL ADDITIONALLY RECEIVE MULCHING OF APPROXIMATELY 2 INCHES LOOSE MEASURE OF MULCH MATERIAL CUT INTO THE SOIL OF THE SEEDED AREA TO A DEPTH OF FOUR INCHES.

6. TEMPORARY GRASSING:
THE SEEDED OR SEEDED AND MULCHED AREA(S) SHALL BE ROLLED AND WATERS AS REQUIRED TO ASSURE OPTIMUM GROWING CONDITIONS FOR THE ESTABLISHMENT OF A GOOD GRASS COVER.

7. TEMPORARY REGRASSING:
IF, AFTER FOURTEEN DAYS, THE TEMPORARY GRASSED AREAS HAVE NOT ATTAINED A MINIMUM OF 75% GOOD GRASS COVER, THE AREA WILL BE REWORKED AND ADDITIONAL SEED APPLIED SUFFICIENT TO ESTABLISH THE DESIRED VEGETATION COVER.

8. MAINTENANCE:
ALL FEATURES OF THE PROJECT SHALL BE CONSTRUCTED TO PREVENT EROSION AND SEDIMENT AND SHALL BE MAINTAINED DURING THE LIFE OF THE CONSTRUCTION SO AS TO FUNCTION PROPERLY WITHOUT THE TRANSPORT OF SEDIMENTS OUTSIDE THE LIMITS OF THE PROJECT.

9. DUST ABATEMENT:
DUST SHALL BE CONTROLLED WITH USE OF WATER AND CALCIUM CHLORIDE.

10. SODDING OF RETENTION POND AND CONVEYANCE SWALE SIDE SLOPES SHOULD NE ACCOMPLISHED AS SOON AS POSSIBLE FOLLOWING COMPLETION OF GRADING TO MINIMIZE EROSION POTENTIAL.

11. AT A MINIMUM, THE RETENTION/DETENTION STORAGE AREA MUST BE EXCAVATED TO ROUGH GRADE PRIOR TO BUILDING CONSTRUCTION OR PLACEMENT OR IMPERVIOUS SURFACE WITHIN THE AREA TO BE SERVED BY THOSE FACILITIES. TO PREVENT REDUCTION IN STORAGE VOLUME AND PERCOLATION RATES, ALL ACCUMULATED SEDIMENT MUST BE REMOVED FOR THE STORAGE AREA PRIOR TO FINAL GRADING AND STABILIZATION.

12. AT A MINIMUM SILT BARRIERS SHALL BE PLACED AS SHOWN ON SHEET C2.1 OF THE CONSTRUCTION PLANS TO INSURE AGAINST POLLUTING, SILTING OR DISTURBING TO SUCH AN EXTENT AS TO CAUSE AN INCREASE IN TURBIDITY TO THE EXISTING WETLAND. IF DURING CONSTRUCTION THE PROPOSED EROSION CONTROL SYSTEM DOES NOT PERFORM SATISFACTORY, ALTERNATIVES AND ADDITIONAL MEASURES SHALL BE IMPLEMENTED BY THE CONTRACTOR IN ORDER TO COMPLY WITH ORANGE CO. AND S.J.R.W.M.D EROSION PROTECTION STANDARDS.

13. CONTRACTOR IS ULTIMATELY RESPONSIBLE FOR ALL EROSION PROTECTION COSTS. INCLUDING ANY COSTS ASSOCIATED WITH COMPLIANCE ISSUES AND ENFORCEMENT ACTIONS.

14. ANY EXISTING WELLS ON SITE MUST BE ABANDONED AS PER SJRWMD PROCEDURES.

SITE PREPARATION/OVER EXCAVATION NOTES:

1. CONTRACTOR TO REFER TO SUBSURFACE EXPLORATION AND GEOTECHNICAL ANALYSIS REPORT PERFORMED BY ANDREYEV ENGINEERING, INC. ON JULY 2019, AND COORDINATE WITH GEOTECHNICAL ENGINEER FOR SITE PREPARATION, INCLUDING LIMITS OF OVER-EXCAVATION, AND SUITABLE FILL PLACEMENT WITHIN THE PROJECT LIMITS.

APPROXIMATE LIMITS OF REQUIRED OVER-EXCAVATION. AFTER STRIPPING, THE HATCHED AREA SHALL BE EXCAVATED TO A DEPTH OF 3 FEET BELOW EXISTING GRADE OR THE BOTTOM OF THE FOUNDATION, WHICHEVER IS LOWER.

Call 48 hours before you dig
It's the Law!
1-800-432-4770
Sunshine State One Call of Florida, Inc.

**SHEET 5 OF 22**

| REV. | DATE | BY |
|---|---|---|
| 1 | 09/17/19 | CITY OF APOPKA COMMENTS DATED 09/17/19 — SCS |
| 2 | 08/27/19 | CITY OF APOPKA COMMENTS DATED 08/27/19 — SCS |

DESCRIPTION

CIVIL ENGINEERING | LAND PLANNING

**APPIAN ENGINEERING LLC.**

APPIANFL.COM • 407.960.5868

2231 Lee Road, Suite 27, Winter Park, Florida 32789

STATE OF FLORIDA CERTIFICATE OF AUTHORIZATION NO. 32574

# EROSION CONTROL AND DEMO PLAN

CENTRAL FLORIDA PREPARATORY SCHOOL
CITY OF APOPKA, FLORIDA

DRAWN: S. SIERRA-GIL
DESIGNED: L. CLASSON
CHECKED: L. CLASSON
DATE: 9/5/2019

SCALE: 1" = 40'
PROJECT: MMI-006
SHEET: C2.0

9/19/19



P:_project drawings\mmi-006 central fl preparatory school\Drawings\cad civil3d\Layouts\04 final development plan\EROSION CONTROL.dwg Modified:9/17/2019 By:ssierragil Plotted By:sofia sierra-gil

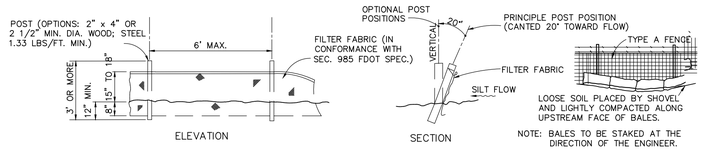


NOTE

SILT FENCE TO BE PAID FOR UNDER THE CONTRACT UNIT PRICE FOR STAKED SILT FENCE (LF).

## 1 TYPE III SILT FENCE DETAIL

N.T.S.

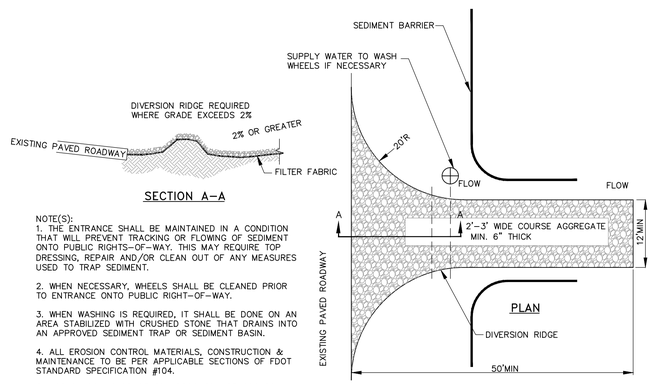


NOTE(S):

1. THE ENTRANCE SHALL BE MAINTAINED IN A CONDITION THAT WILL PREVENT TRACKING OR FLOWING OF SEDIMENT ONTO PUBLIC RIGHTS–OF–WAY. THIS MAY REQUIRE TOP DRESSING, REPAIR AND/OR CLEAN OUT OF ANY MEASURES USED TO TRAP SEDIMENT.
2. WHEN NECESSARY, WHEELS SHALL BE CLEANED PRIOR TO ENTRANCE ONTO PUBLIC RIGHT–OF–WAY.
3. WHEN WASHING IS REQUIRED, IT SHALL BE DONE ON AN AREA STABILIZED WITH CRUSHED STONE THAT DRAINS INTO AN APPROVED SEDIMENT TRAP OR SEDIMENT BASIN.
4. ALL EROSION CONTROL MATERIALS, CONSTRUCTION & MAINTENANCE TO BE PER APPLICABLE SECTIONS OF FDOT STANDARD SPECIFICATION #104.
5. USE SANDBAGS OR OTHER APPROVED METHODS TO CHANNELIZE RUNOFF TO BASIN REQUIRED.
6. COURSE AGGREGATE & FILTER FABRIC TO BE PER SECTIONS OF FDOT STANDARD SPECIFICATION #901 & #985 RESPECTIVELY.

## 2 TEMPORARY CONSTRUCTION ENTRANCE DETAIL

N.T.S.

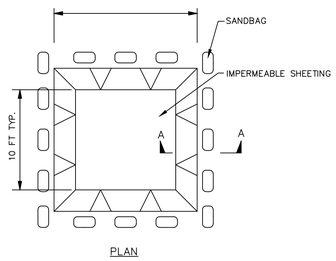


EXCAVATED WASHOUT STRUCTURE

NOTES:

1. LOCATE WASHOUT STRUCTURE A MINIMUM OF 50 FEET AWAY FROM OPEN CHANNELS, STORM DRAIN INLETS, SENSITIVE AREAS, WETLANDS, BUFFERS AND WATER COURSES AND AWAY FROM CONSTRUCTION TRAFFIC.
2. SIZE WASHOUT STRUCTURE FOR VOLUME NECESSARY TO CONTAIN WASH WATER AND SOLIDS AND MAINTAIN AT LEAST 4 INCHES OF FREEBOARD. TYPICAL DIMENSIONS ARE 10 FEET X 10 FEET X 3 FEET DEEP.
3. PREPARE SOIL BASE FREE OF ROCKS OR OTHER DEBRIS THAT MAY CAUSE TEARS OR HOLES IN THE LINER. FOR LINER, USE 10 MIL OR THICKER UV RESISTANT, IMPERMEABLE SHEETING, FREE OF HOLES AND TEARS OR OTHER DEFECTS THAT COMPROMISE IMPERMEABILITY OF THE MATERIAL.
4. PROVIDE A SIGN FOR THE WASHOUT IN CLOSE PROXIMITY TO THE FACILITY.
5. KEEP CONCRETE WASHOUT STRUCTURE WATER TIGHT. REPLACE IMPERMEABLE LINER IF DAMAGED (E.G., RIPPED OR PUNCTURED). EMPTY OR REPLACE WASHOUT STRUCTURE THAT IS 75 PERCENT FULL, AND DISPOSE OF ACCUMULATED MATERIAL PROPERLY. DO NOT REUSE PLASTIC LINER. WET–VACUUM STORED LIQUIDS THAT HAVE NOT EVAPORATED AND DISPOSE OF IN AN APPROVED MANNER. PRIOR TO FORECASTED RAINSTORMS, REMOVE LIQUIDS OR COVER STRUCTURE TO PREVENT OVERFLOWS. REMOVE HARDENED SOLIDS, WHOLE OR BROKEN UP, FOR DISPOSAL OR RECYCLING. MAINTAIN RUNOFF DIVERSION AROUND EXCAVATED WASHOUT STRUCTURE UNTIL STRUCTURE IS REMOVED.

## 3 CONCRETE WASH OUT

N.T.S.

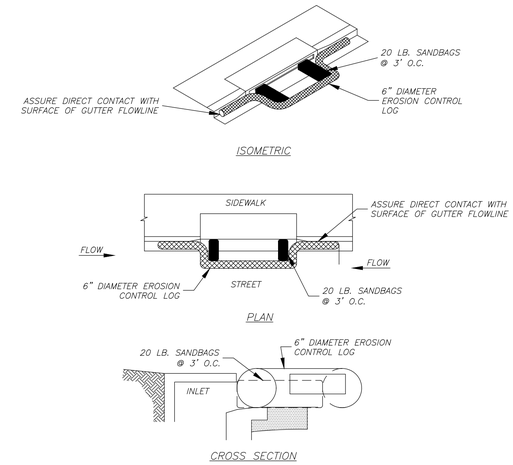


NOTES:

1. EROSION CONTROL LOG CONTAINMENT MESH SHALL BE 100% BIODEGRADABLE, PHOTODEGRADABLE OR RECYCLABLE; AND FILL MATERIAL SHALL CONSIST OF MULCH, ASPEN EXCELSIOR FIBERS, CHIPPED SITE VEGETATION, COCONUT FIBERS, 100% RECYCLABLE FIBERS, OR ANY OTHER ACCEPTABLE MATERIAL EXCLUDING STRAW AND HAY.
2. DAILY INSPECTION SHALL BE MADE BY THE CONTRACTOR AND SILT ACCUMULATION MUST BE REMOVED WHEN DEPTH REACHES 2".
3. CONTRACTOR SHALL MONITOR THE PERFORMANCE OF INLET PROTECTION DURING EACH RAINFALL EVENT AND IMMEDIATELY REMOVE THE INLET PROTECTIONS IF THE STORM WATER BEGINS TO OVERTOP THE CURB.
4. INLET PROTECTIONS SHALL BE REMOVED AS SOON AS THE SOURCE OF SEDIMENT IS STABILIZED.

## 4 EROSION CONTROL LOG DETAIL

N.T.S.

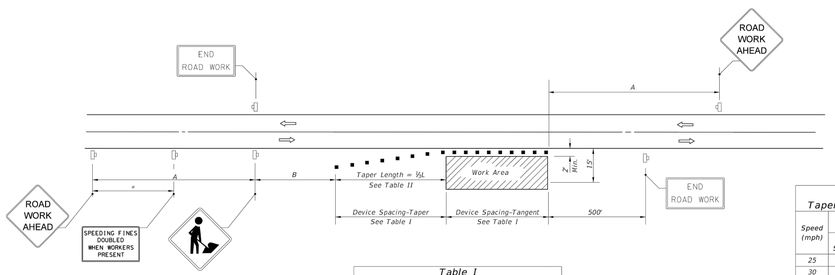


| DISTANCE BETWEEN SIGNS | | |
|---|---|---|
| Speed | Spacing (ft.) | |
| | A | B |
| 40 mph or less | 200 | 200 |
| 45 mph | 350 | 350 |
| 50 mph or greater | 500 | 500 |

*Midway between signs.

| Table I Device Spacing | | | | |
|---|---|---|---|---|
| Speed (mph) | Max. Distance Between Devices (ft.) | | | |
| | Cones or Tubular Markers | | Type I or Type II Barricades or Vertical Panels or Drums | |
| | Taper | Tangent | Taper | Tangent |
| 25 | 25 | 50 | 25 | 50 |
| 30 to 45 | 25 | 50 | 30 | 50 |
| 50 to 70 | 25 | 50 | 50 | 100 |

| Table II Taper Length - Shoulder | | | | |
|---|---|---|---|---|
| Speed (mph) | ½L (ft) | | | Notes |
| | 8' Shldr. | 10' Shldr. | 12' Shldr. | |
| 25 | 28 | 35 | 42 | |
| 30 | 40 | 50 | 60 | $L = \frac{WS^2}{60}$ |
| 35 | 55 | 68 | 82 | |
| 40 | 72 | 90 | 107 | |
| 45 | 120 | 150 | 180 | |
| 50 | 133 | 167 | 200 | |
| 55 | 147 | 183 | 220 | L=WS |
| 60 | 160 | 200 | 240 | |
| 65 | 173 | 217 | 260 | |
| 70 | 187 | 233 | 280 | |

8' minimum shoulder width

½L = Length of shoulder taper in feet

W = Width of total shoulder in feet (combined paved and unpaved width)

S = Posted speed limit (mph)

### SYMBOLS

- Work Area
- Channelizing Device (See Index 102-600)
- Work Zone Sign
- Lane Identification + Direction of Traffic

### GENERAL NOTES

1. When four or more work vehicles enter the through traffic lanes in a one hour period or less (excluding establishing and terminating the work area), the advanced FLAGGER sign shall be substituted for the WORKERS sign. For location of Flaggers and FLAGGER signs, see Index 102-603.
2. SHOULDER WORK sign may be used as an alternate to the WORKER symbol sign only on the side where the shoulder work is being performed.
3. When a side road intersects the highway within the TTC zone, additional TTC devices shall be placed in accordance with other applicable TCZ Indexes.
4. For general TCZ requirements and additional information, refer to Index 102-600.

### DURATION NOTES

1. Signs and channelizing devices may be omitted if all of the following conditions are met:
   a. Work operations are 60 minutes or less.
   b. Vehicles in the work area have high-intensity, rotating, flashing, oscillating, or strobe lights operating.

### CONDITIONS

WHERE ANY VEHICLE, EQUIPMENT, WORKERS OR THEIR ACTIVITIES ENCROACH THE AREA CLOSER THAN 15' BUT NOT CLOSER THAN 2' TO THE EDGE OF TRAVEL WAY.

| LAST REVISION | REVISION | DESCRIPTION: | FDOT FY 2019-20 STANDARD PLANS | TWO-LANE, TWO-WAY, WORK ON SHOULDER | INDEX | SHEET |
|---|---|---|---|---|---|---|
| 11/01/17 | | | | | 102-602 | 1 of 1 |

## 5 MAINTENANCE OF TRAFFIC – WORK ON SHOULDER

N.T.S.

### SYMBOLS

- Work Area
- Channelizing Device
- Work Zone Sign
- CR Required Locations For Either Temporary Or Permanent Curb Ramps.
- Lane Identification + Direction of Traffic
- Pedestrian Longitudinal Channelizing Device (LCD) with Mounted Work Zone Sign or separate Work Zone Sign
- Pedestrian Longitudinal Channelizing Device (LCD)
- Temporary Sidewalk

### GENERAL NOTES:

1. When encroaching work requires a sidewalk closure for 60 minutes or greater, provide an alternate pedestrian route.
2. For spacing of vehicular Channelizing Devices, see applicable vehicular temporary traffic control Indexes.
3. Cover or deactivate pedestrian traffic signal display(s) controlling closed crosswalks.
4. For post mounted signs located near or adjacent to a sidewalk, maintain a minimum 7' clearance from the bottom of the sign panel to the surface of the sidewalk.
5. Provide a 5' wide temporary walkway, except where space restrictions warrant a minimum width of 4'. Provide a 5' x 5' passing space for temporary walkways less than 5' in width at intervals not to exceed 200'.
6. Provide a cross-slope with a maximum value of 0.02 for all temporary walkways.
7. Maintain temporary walkway surfaces and ramps that are stable, firm, slip-resistant, and free of any obstructions or hazards such as holes, debris, mud, construction equipment, and stored material.
8. Remove temporary walkways immediately after reopening of the sidewalk, unless otherwise noted in the plans.
9. Meet the requirements of Index 522-002 for temporary curb ramps.
10. Place pedestrian longitudinal channelizing device(s) across the full width of the closed sidewalk. For temporary walkways, similar to the Sidewalk Diversion, place LCDs to delineate both sides of the temporary walkway.
11. For sidewalk diversions, ensure that there is sufficient R/W for placement of temporary sidewalk and pedestrian longitudinal channelizing devices.

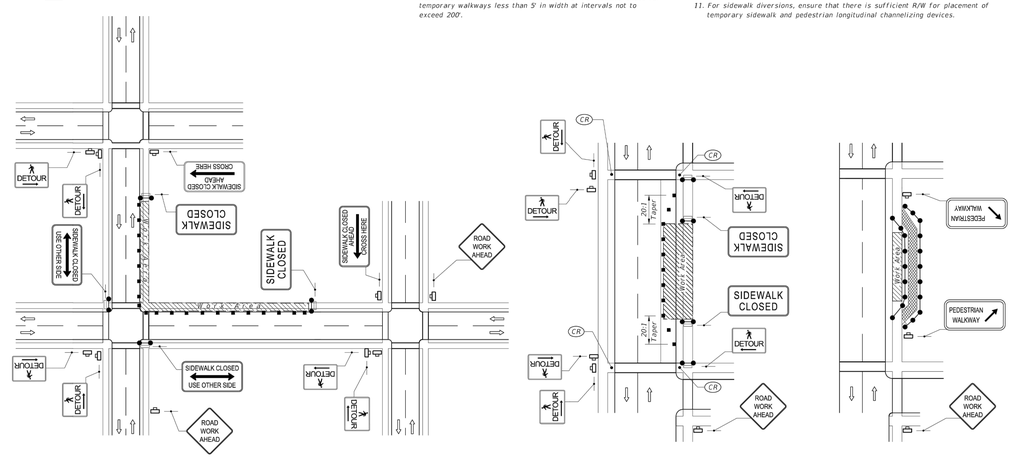


CROSSWALK CLOSURE AND PEDESTRIAN DETOUR

SIDEWALK DETOUR

SIDEWALK DIVERSION

| LAST REVISION | REVISION | DESCRIPTION: | FDOT FY 2019-20 STANDARD PLANS | PEDESTRIAN CONTROL FOR CLOSURE OF SIDEWALKS | INDEX | SHEET |
|---|---|---|---|---|---|---|
| 11/01/17 | | | | | 102-660 | 1 of 1 |

## 6 PEDESTRIAN CONTROL FOR CLOSURE OF SIDEWALKS

N.T.S.

**SHEET 6 OF 22**

Call 48 hours before you dig
It's the Law! 1-800-432-4770
Sunshine State One Call of Florida, Inc.

| REV. | DATE | DESCRIPTION | BY |
|---|---|---|---|
| A | 09/17/19 | CITY OF APOPKA COMMENTS DATED 09/17/19 | SCS |
| A | 08/27/19 | CITY OF APOPKA COMMENTS DATED 08/27/19 | SCS |

CIVIL ENGINEERING | LAND PLANNING
APPIAN ENGINEERING LLC.
APPIANEL.COM • 407.960.5868
2221 Lee Road, Suite 27, Winter Park, Florida 32789
STATE OF FLORIDA CERTIFICATE OF AUTHORIZATION NO. 32574

EROSION CONTROL & M.O.T DETAILS

CENTRAL FLORIDA PREPARATORY SCHOOL
CITY OF APOPKA, FLORIDA

| DRAWN: S. SIERRA–GIL | DESIGNED: L. CLASSON | CHECKED: L. CLASSON | DATE: 7/22/2019 |
|---|---|---|---|
| SCALE: N.T.S. | PROJECT: MMI–006 | SHEET: C2.1 | |

9/19/19

P:_project drawings\mmi-006 central fl preparatory school\Drawings\cad civil3d\Layouts\04 final development plan\EROSION CONTROL & MOT DETAILS.dwg Modified: 7/22/2019 By:gcorral Plotted By:sofia sierra-gil

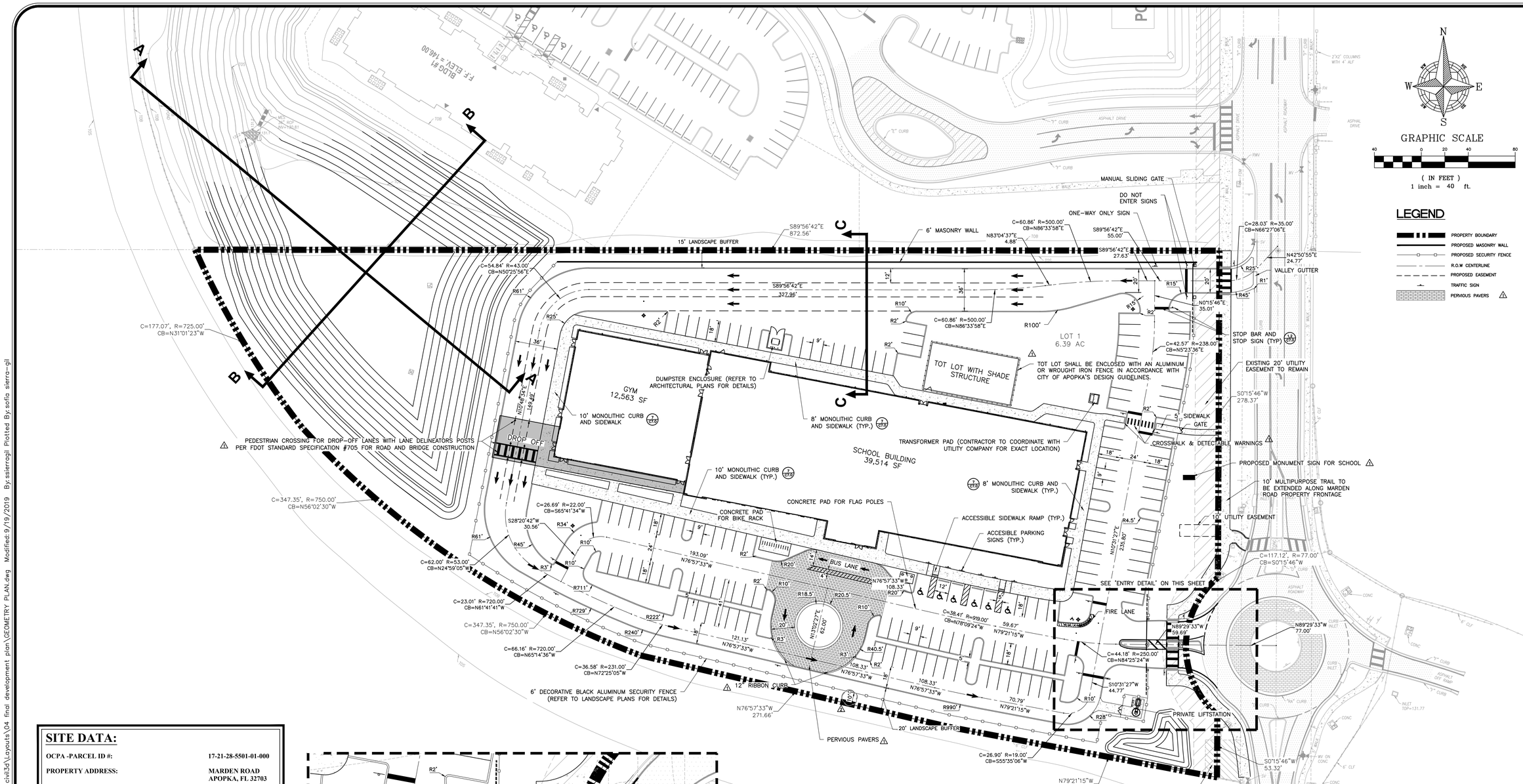


## SITE DATA:

| | |
|---|---|
| OCPA -PARCEL ID #: | 17-21-28-5501-01-000 |
| PROPERTY ADDRESS: | MARDEN ROAD APOPKA, FL 32703 |
| TOTAL PROPERTY AREA: | 6.39 Ac |
| EXISTING FUTURE LAND USE: | COMMERCIAL |
| EXISTING ZONING: | PUD |
| MAXIMUM BUILDING HEIGHT: | 35 ft. |
| PEOPLE CALCULATIONS: | |
| TOTAL BUILDING AREA | ±53,000 SQ. FT. |
| NUMBER OF STUDENTS | 600 STUDENTS |
| NUMBER OF EMPLOYEES | 40 EMPLOYEES |
| PARKING SPACES REQUIRED: (31 CLASSROOMS X 4) + (124 HS STUDENT / 3) | 165 |
| PARKING SPACES PROVIDED: | |
| ACCESSIBLE SPACES | 6 |
| STANDARD SPACES | 146 |
| OVERFLOW QUEUE LANE | 80 |
| TOTAL: | 232 |
| FLOOR AREA RATIO: [(±53,000 SQ. FT. / 43,560 SQ.FT./Ac) / 6.39 Ac] | 0.19 |
| REQUIRED PERVIOUS PAVEMENT AREA: (STANDARD PARKING SPACE AREA X 20% OF PROVIDED SPACES) (9 ft. X 18 ft. = 162 SQ. FT. X 31 SPACES = 5,022 SQ. FT.) | 5,022 SQ. FT. |
| PROVIDED PERVIOUS PAVEMENT AREA: | 6,870 SQ. FT. |

**NOTES:**

1. THE TEN (10) FOOT TRAIL ALONG MARDEN ROAD SHALL BE CONSTRUCTED PRIOR TO THE ISSUANCE OF THE CERTIFICATE OF OCCUPANCY.

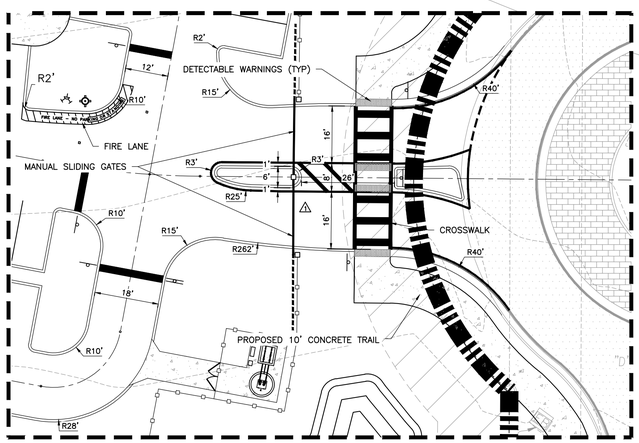


ENTRY DETAIL
SCALE: 1" = 20'

Call 48 hours before you dig
It's the Law! 1-800-432-4770
Sunshine State One Call of Florida, Inc.

**SHEET 7 OF 22**

| REV. | DATE | DESCRIPTION | BY |
|---|---|---|---|
| 1 | 09/17/19 | CITY OF APOPKA COMMENTS DATED 09/17/19 | SCS |
| 2 | 08/27/19 | CITY OF APOPKA COMMENTS DATED 08/27/19 | SCS |

CIVIL ENGINEERING | LAND PLANNING
**APPIAN ENGINEERING LLC.**
APPIANEL.COM • 407.960.5868
2221 Lake Rose, Suite 27, Winter Park, Florida 32789
STATE OF FLORIDA CERTIFICATE OF AUTHORIZATION NO. 32574

GEOMETRY PLAN
CENTRAL FLORIDA PREPARATORY SCHOOL
CITY OF APOPKA, FLORIDA

| | |
|---|---|
| DRAWN: S. SIERRA-GIL | DESIGNED: L. CLASSON |
| CHECKED: L. CLASSON | DATE: 9/17/2019 |
| SCALE 1" = 40' | PROJECT MMI-006 |
| SHEET C3.0 | |

9/19/19

P:_project drawings\mmi-006 central fl preparatory school\Drawings\cad civil3d\Layouts\04 final development plan\GEOMETRY PLAN.dwg Modified:9/19/2019 By:ssierragil Plotted By:sofia sierra-gil

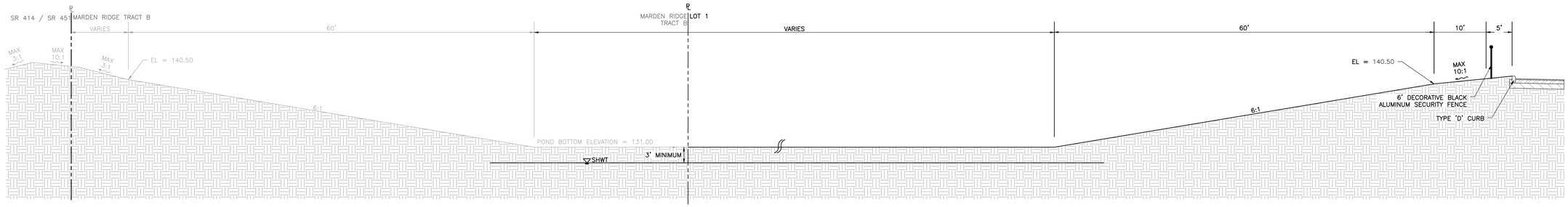


## SECTION A–A

N.T.S

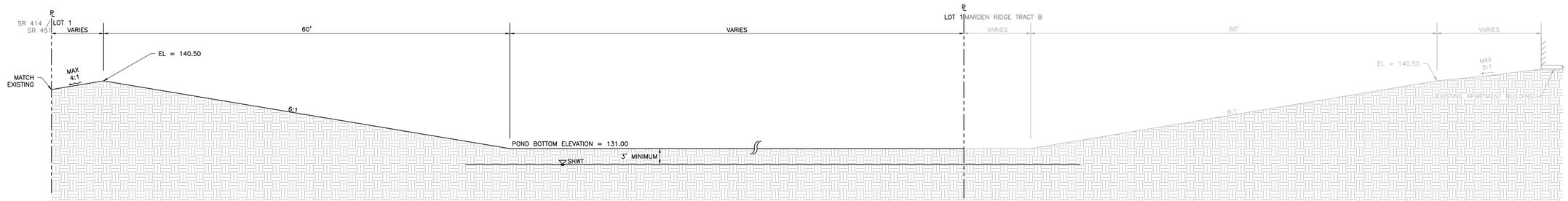


## SECTION B–B

N.T.S

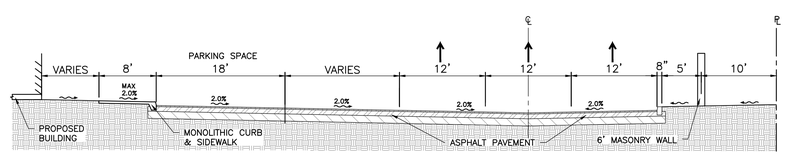


## SECTION C–C

N.T.S

Call 48 hours before you dig

It's the Law! 1-800-432-4770

Sunshine State One Call of Florida, Inc.

**SHEET 8 OF 22**

| REV. | DATE | DESCRIPTION | BY |
|---|---|---|---|
| 1 | 09/17/19 | CITY OF APOPKA COMMENTS DATED 09/17/19 | SCS |
| 2 | 08/27/19 | CITY OF APOPKA COMMENTS DATED 08/27/19 | SCS |

CIVIL ENGINEERING | LAND PLANNING

**APPIAN ENGINEERING LLC.**

APPIANFL.COM • 407.960.5868

2221 Lee Road, Suite 27, Winter Park, Florida 32789

STATE OF FLORIDA CERTIFICATE OF AUTHORIZATION NO. 32574

CROSS SECTIONS

CENTRAL FLORIDA PREPARATORY SCHOOL
CITY OF APOPKA, FLORIDA

| | |
|---|---|
| DRAWN: S. SIERRA–GIL | DESIGNED: L. CLASSON |
| CHECKED: L. CLASSON | DATE: 9/17/2019 |
| SCALE: N.T.S | PROJECT: MMI–006 |
| SHEET: C3.1 | |

9/19/19

P:_project drawings\mmi-006 central fl preparatory school\Drawings\cad civil3d\Layouts\04 final development plan\GEOMETRY PLAN.dwg Modified:9/17/2019 By:sofia sierra-gil

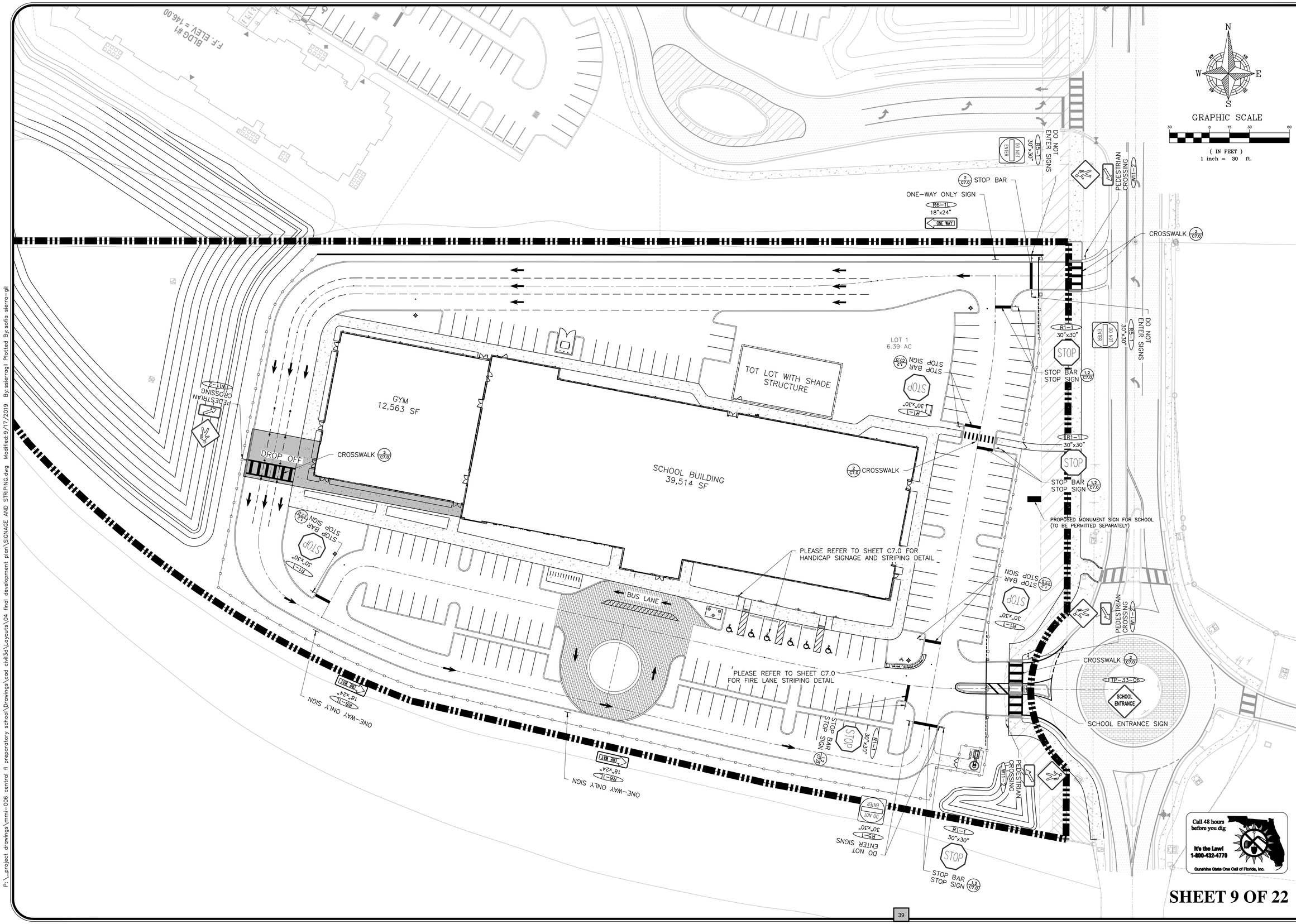


SHEET 9 OF 22

| REV. | DATE | DESCRIPTION | BY |
|---|---|---|---|
| A | 09/17/19 | CITY OF APOPKA COMMENTS DATED 09/17/19 | SCS |
| A | 08/27/19 | CITY OF APOPKA COMMENTS DATED 08/27/19 | SCS |

CIVIL ENGINEERING | LAND PLANNING

**APPIAN ENGINEERING LLC.**

APPIANEL.COM • 407.960.5868

2231 Lake Rogers, Suite 27, Winter Park, Florida 32789

STATE OF FLORIDA CERTIFICATE OF AUTHORIZATION NO. 32574

SIGNING & STRIPING PLAN

CENTRAL FLORIDA PREPARATORY SCHOOL
CITY OF APOPKA, FLORIDA

| | |
|---|---|
| DRAWN: | S. SIERRA-GIL |
| DESIGNED: | L. CLASSON |
| CHECKED: | L. CLASSON |
| DATE: | 9/4/2019 |
| SCALE | 1" = 30' |
| PROJECT | MMI-006 |
| SHEET | C3.2 |

9/19/19

P:_project drawings\mmi-006 central fl preparatory school\Drawings\cad civil3d\Layouts\04 final development plan\SIGNAGE AND STRIPING.dwg Modified:9/17/2019 By:ssierragil Plotted By:sofia sierra-gil

P:_project drawings\mmi-006 central fl preparatory school\Drawings\cad civil3d\Layouts\04 final development plan\FIRE TRUCK ROUTING PLAN.dwg Modified:8/14/2019 By:scorral Plotted By:sofia sierra-gil

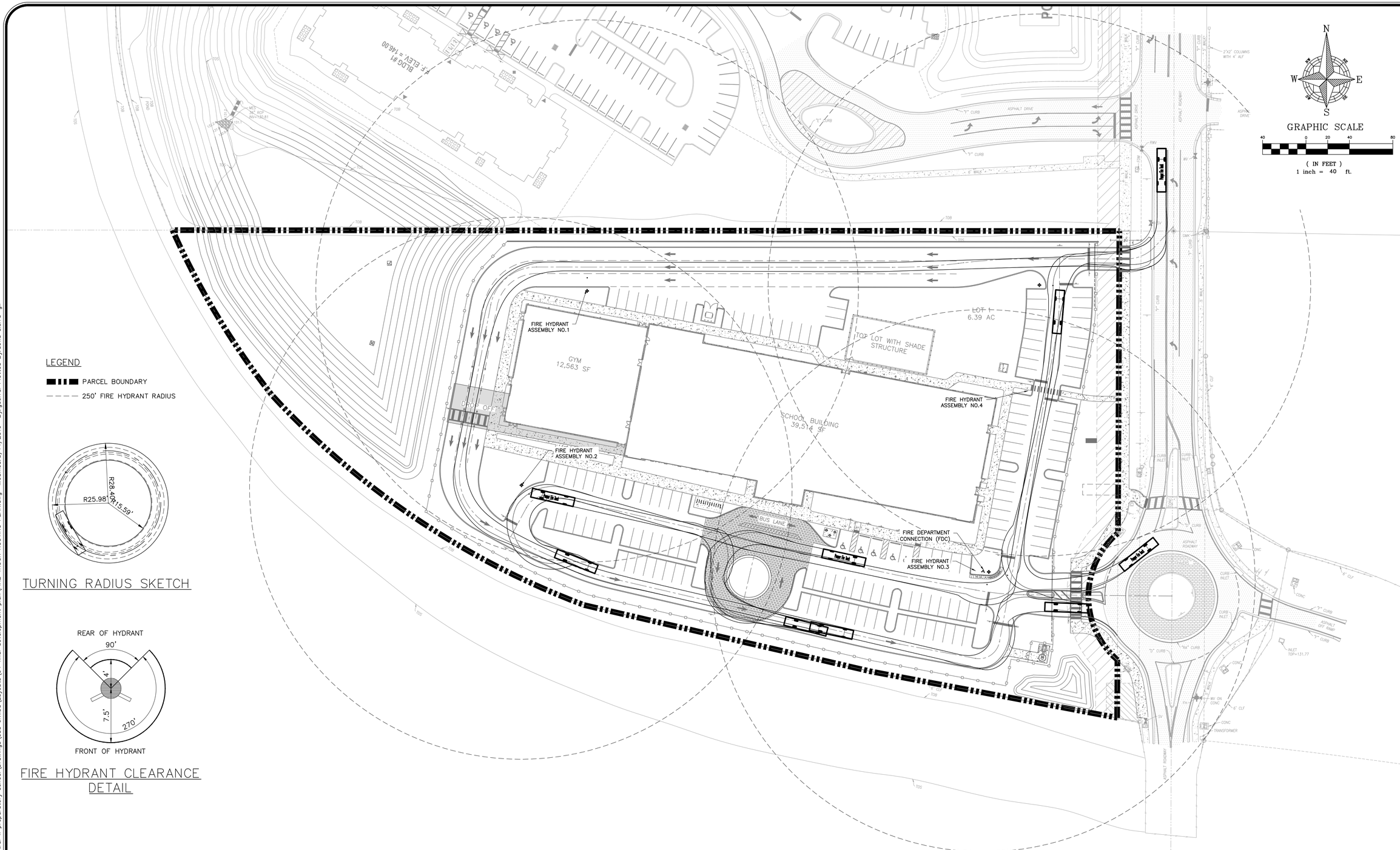


| Pumper Fire Truck | |
|---|---|
| Overall Length | 40.000ft |
| Overall Width | 8.167ft |
| Overall Body Height | 7.745ft |
| Min Body Ground Clearance | 0.656ft |
| Track Width | 8.167ft |
| Lock-to-lock time | 5.00s |
| Max Wheel Angle | 45.00° |

FIRE ACCESS NOTES:

1. FIRE DEPARTMENT ACCESS ROADS SHALL BE DESIGNED AND MAINTAINED TO SUPPORT THE IMPOSED LOADS OF FIRE APPARATUS AND SHALL BE PROVIDED WITH AN ALL WEATHER DRIVING SURFACE (NFPA 1,18.2.3.4.2).
2. THE LOCATION OF THE FIRE HYDRANTS SHALL BE IDENTIFIED BY A BLUE REFLECTIVE PAVEMENT MARKER. (NFPA 1,18.5.10.1)

Call 48 hours before you dig
It's the Law!
1-800-432-4770
Sunshine State One Call of Florida, Inc.

**SHEET 10 OF 22**

| REV. | DATE | DESCRIPTION | BY |
|---|---|---|---|
| 1 | 09/17/19 | CITY OF APOPKA COMMENTS DATED 09/17/19 | SCS |
| 2 | 08/27/19 | CITY OF APOPKA COMMENTS DATED 08/27/19 | SCS |

CIVIL ENGINEERING | LAND PLANNING

**APPIAN ENGINEERING LLC.**

APPIANFL.COM • 407.960.5868

2221 Lake Rogers Circle, Suite 27, Winter Park, Florida 32789

STATE OF FLORIDA CERTIFICATE OF AUTHORIZATION NO. 32574

# FIRE TRUCK ROUTING PLAN

CENTRAL FLORIDA PREPARATORY SCHOOL
CITY OF APOPKA, FLORIDA

DRAWN: S. SIERRA-GIL
DESIGNED: L. CLASSON
CHECKED: L. CLASSON
DATE: 8/14/2019
SCALE: 1" = 40'
PROJECT: MMI-006
SHEET: C3.3

9/19/19

P:_project drawings\mmi-006 central fl preparatory school\Drawings\cad civil3d\Layouts\04 final development plan\LIGHTING PLAN.dwg Modified: 9/4/2019 By:sierragil Plotted By:sofia sierra-gil

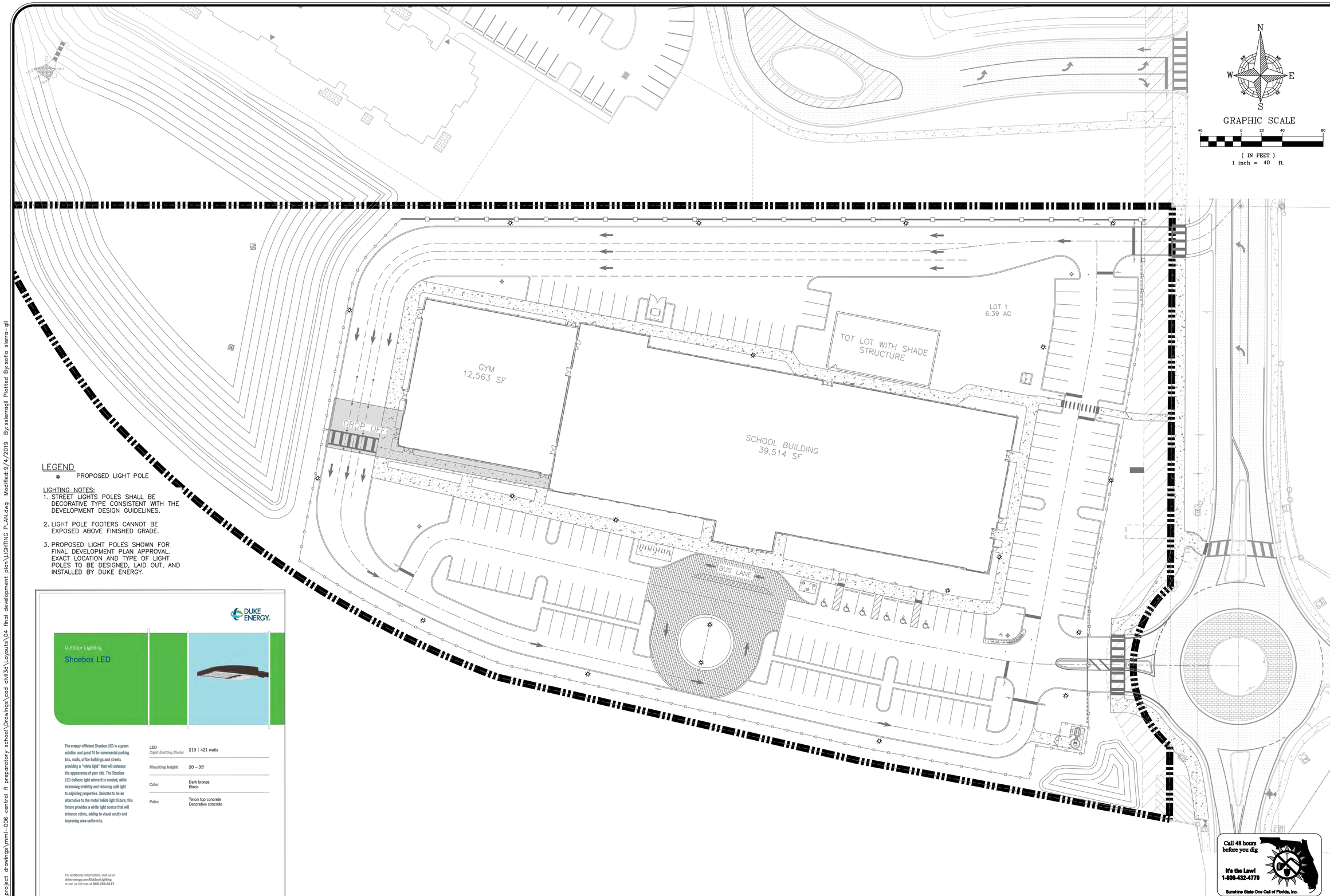


LEGEND

✲ PROPOSED LIGHT POLE

LIGHTING NOTES:

1. STREET LIGHTS POLES SHALL BE DECORATIVE TYPE CONSISTENT WITH THE DEVELOPMENT DESIGN GUIDELINES.
2. LIGHT POLE FOOTERS CANNOT BE EXPOSED ABOVE FINISHED GRADE.
3. PROPOSED LIGHT POLES SHOWN FOR FINAL DEVELOPMENT PLAN APPROVAL. EXACT LOCATION AND TYPE OF LIGHT POLES TO BE DESIGNED, LAID OUT, AND INSTALLED BY DUKE ENERGY.



DUKE ENERGY.

Outdoor Lighting

Shoebox LED

The energy-efficient Shoebox LED is a green solution and great fit for commercial parking lots, malls, office buildings and streets providing a "white light" that will enhance the appearance of your site. The Shoebox LED delivers light where it is needed, while increasing visibility and reducing spill light to adjoining properties. Selected to be an alternative to the metal halide light fixture, this fixture provides a white light source that will enhance colors, adding to visual acuity and improving area uniformity.

| | |
|---|---|
| LED (Light Emitting Diode) | 213 \| 421 watts |
| Mounting height | 20' – 35' |
| Color | Dark bronze<br>Black |
| Poles | Tenon top concrete<br>Decorative concrete |

For additional information, visit us at duke-energy.com/OutdoorLighting or call us toll free at 866.769.8417.

DETAIL PROVIDED BY DUKE ENERGY

LIGHT DETAIL

Call 48 hours before you dig

It's the Law!
1-800-432-4770

Sunshine State One Call of Florida, Inc.

SHEET 11 OF 22

| REV. | DATE | | BY |
|---|---|---|---|
| 1 | 09/17/19 | CITY OF APOPKA COMMENTS DATED 09/17/19 | SCS |
| 2 | 08/27/19 | CITY OF APOPKA COMMENTS DATED 08/27/19 | SCS |

DESCRIPTION

CIVIL ENGINEERING | LAND PLANNING

APPIAN ENGINEERING LLC.

APPIANFL.COM • 407.960.5868

2221 Lee Road, Suite 27, Winter Park, Florida 32789

STATE OF FLORIDA CERTIFICATE OF AUTHORIZATION NO. 32574

# LIGHTING PLAN

CENTRAL FLORIDA PREPARATORY SCHOOL
CITY OF APOPKA, FLORIDA

DRAWN: S. SIERRA-GIL
DESIGNED: L. CLASSON
CHECKED: L. CLASSON
DATE: 8/2/2019

SCALE 1" = 30'
PROJECT MMI-006
SHEET C3.4

9/19/19

## GENERAL UTILITY NOTES:

1. BACTERIOLOGICAL TESTS WITH CHLORINE RESIDUALS INDICATED (TAKEN ON TWO CONSECUTIVE DAYS) SHALL BE CONDUCTED AT EACH POTABLE WATER METER FOR EVERY BUILDING, AT EVERY WET-TAP CONNECTION AND EVERY LOCATION INDICATED WITHIN THESE PLANS. RESULTS OF THE BACTERIOLOGICAL TESTS SHALL BE PROVIDED TO THE ENGINEER OF RECORD IMMEDIATELY UPON COMPLETION. BACTERIOLOGICAL TEST RESULTS SHALL BE CONSIDERED UNACCEPTABLE IF THE TESTS WERE COMPLETED MORE THAN 30 DAYS BEFORE THE ENGINEER RECEIVED THE RESULTS.

2. ALL WATERMAINS SHALL BE INSTALLED A MINIMUM OF 36" BELOW FINISHED GRADE.

3. ALL WATERMAINS AND FIRELINES PIPES SHALL BE RESTRAINED VIA MECHANICAL JOINTS.

4. WATER MAIN PVC PIPES LESS THAN 4 INCHES MUST CONFORM TO THE SPECIFICATIONS OF ASTM 1785 (SCHEDULE 40, 80, 120) OR ASTM 2241 SDR21 AND MUST BEAR THE NSF LOGO ON EACH INSTALLED LENGTH.

5. UNDERGROUND MARKING TAPE FOR ALL SANITARY FORCEMAINS SHALL BE INSTALLED 4 TO 8 INCHES BELOW THE FINISHED GRADE SURFACE DIRECTLY OVER THE PIPELINE. MARKER TAPE SHALL BE MADE OF AN INERT POLYETHYLENE MATERIAL HAVING A MINIMUM THICKNESS OF 4 MILS AND BE COLOR CODED "SAFETY GREEN".

6. CONTRACTOR SHALL CONDUCT AND PROVIDE RESULTS IMMEDIATELY TO THE ENGINEER OF RECORD FOR PRESSURE AND LEAKAGE TESTS ON THE FORCE MAIN TRUNK LINE ONCE THE PRESSURE SEWER HAS BEEN INSTALLED AND PARTLY BACKFILLED. FINAL BACKFILL AND COMPACTION SHALL NOT COMMENCE UNTIL APPROVAL OF THE PRESSURE AND LEAKAGE TESTS HAS BEEN PROVIDED BY THE ENGINEER OF RECORD.

7. FOLLOWING SATISFACTORY PRESSURE TEST RESULTS, THE CONTRACTOR SHALL DISINFECT ALL SECTIONS OF THE WATER DISTRIBUTION SYSTEM, AND RECEIVE APPROVAL THEREOF FROM APPROPRIATE AGENCIES PRIOR TO PLACING THE SYSTEM INTO SERVICE.

8. FIRE HYDRANTS SHALL BE PLACED A MINIMUM OF 3 FT. AND A MAXIMUM OF 5 FT. FROM THE CURB OR PAVED ROAD SURFACE UNLESS OTHERWISE APPROVED. NO FENCE, TREE, POST, SHRUB, OR OTHER OBJECT WHICH COULD BLOCK THE HYDRANT FROM NORMAL VIEW OR OBSTRUCT THE HYDRANT'S USE SHALL BE LOCATED WITHIN FOUR (4) FEET OF THE HYDRANT. THE FOUR-AND-ONE-HALF INCH (4-1/2") LARGE VOLUME CONNECTION SHALL FACE THE NEAREST ROADWAY. THE CENTER OF THE STEAMER PORT SHALL BE 18 INCHES MINIMUM AND 24 INCHES MAXIMUM ABOVE FINISHED GRADE.

9. ALL FIRE HYDRANT LEADS SHALL HAVE AN INSIDE DIAMETER OF AT LEAST SIX INCHES AND INCLUDE AUXILARY VALVES.

10. WHEN NECESSARY, DEWATERING SHALL BE PROVIDED TO KEEP THE GROUNDWATER ELEVATION A MINIMUM OF 6 INCHES BELOW MAIN BEING LAID.

11. ALL UTILITIES SHALL BE LAID ON A FIRM FOUNDATION WITH ALL UNSUITABLE MATERIAL (MUCK, ROCK, COQUINA, ETC.) REMOVED AND REPLACED WITH CLEAN GRANULAR MATERIAL.

12. TRENCHES SHALL BE BACKFILLED WITH MATERIAL ACCEPTABLE TO CITY OF CLERMONT UTILITIES WITH A MINIMUM COMPACTION OF 98% IN PAVED AREAS AND 95% IN UNPAVED AREAS IN ACCORDANCE WITH AASHTO T-180 MODIFIED PROCTOR TEST.

13. IT SHALL BE THE CONTRACTORS RESPONSIBILITY TO ENSURE THAT TRENCH COMPACTION TESTS BE PROVIDED AT POINTS 12 INCHES ABOVE THE PIPE AND AT 12 INCHES VERTICAL INTERVALS TO FINISH GRADE, AT A MINIMUM SPACING OF EVERY 300 FEET.

14. ALL WATER SERVICE ENDINGS SHALL BE MARKED WITH A 2" X 4" LUMBER (PRESSURE TREATED) EXTENDING 4 FEET ABOVE GRADE, WITH WATER SERVICES SECURED 12" MAXIMUM ABOVE THE GROUND.

15. ALL WATER VALVES, INCLUDING CONCRETE COLLAR (WITH DEBRIS CAP), SHALL BE ADJUSTED TO FINISHED GRADE AND THE VALVE BOX LID, PAINTED BLUE TO MAKE THEM PLAINLY VISIBLE.

16. UPON FINAL ACCEPTANCE OF NEW WATER SYSTEMS, WATER VALVES SHALL BE COMPLETELY OPENED BY PUBLIC UTILITIES PERSONNEL. AT NO TIME SHALL CONTRACTOR OPERATE ANY EXISTING VALVES WITHOUT CITY OF CLERMONT UTILITIES INSPECTOR PRESENT.

17. ALL WATER MAINS SHALL BE NSF-APPROVED FOR POTABLE WATER USE.

18. PIPE USED IN WATER DISTRIBUTION SYSTEMS SHALL BE EITHER POLYVINYL CHLORIDE (PVC), OR DUCTILE IRON PIPE (DIP).

    (a) ALL PVC PIPE OF NOMINAL DIAMETER FOUR (4) INCHES THROUGH TWELVE (12) INCHES SHALL BE MANUFACTURED IN ACCORDANCE WITH AWWA STANDARD C900, LATEST EDITION. THE PVC PIPE SHALL HAVE A MINIMUM WORKING PRESSURE RATING OF 150PSI AND SHALL HAVE A DIMENSION RATIO (DR) OF 18.
    (b) ALL DUCTILE IRON PIPE SHALL BE MANUFACTURED IN ACCORDANCE WITH ANSI/AWWA A21.51/C151 AND HAVE A MINIMUM 350 PRESSURE CLASS RATING

19. PIPE USED IN GRAVITY SEWER CONSTRUCTION SHALL BE POLYVINYL CHLORIDE (PVC) OR DUCTILE IRON PIPE (DIP). WHERE REFERENCE IS MADE TO AN ASTM, ANSI, OR AASHTO DESIGNATION, IT SHALL BE THE LATEST REVISION.

    (a) PVC GRAVITY SEWER PIPE (4 INCH – 15 INCH), ASTM D3034, SDR 35 – UNIFORM MINIMUM "PIPE STIFFNESS" AT FIVE (5) PERCENT DEFLECTION SHALL BE 46PSI. THE JOINTS SHALL BE INTEGRAL BELL ELASTOMERIC GASKET JOINTS MANUFACTURED IN ACCORDANCE WITH ASTM D3212 AND ASTM F477. APPLICABLE UNI-BELL PLASTIC PIPE ASSOCIATION STANDARD IS UNI-B-4. ALL PVC PIPE SHALL BEAR THE NSF-DW SEAL AND BE GREEN IN OVERALL COLOR. THE MINIMUM STANDARD LENGTH OF PIPE SHALL BE THIRTEEN (13) FEET.
    (b) DUCTILE IRON PIPE SHALL CONFORM TO ANSI/AWWA A21.51/C151, CLASS THICKNESS DESIGNED PER ANSI/AWWA A21.50/C150, WITH MECHANICAL OR PUSH ON JOINTS. AN INTERIOR PROTECTIVE LINING OF COAL TAR EPOXY SHALL BE PROVIDED WITH A MINIMUM DRY THICKNESS OF 30 MILS. DUCTILE IRON GRAVITY SEWERS, WHERE REQUIRED BY CITY OF CLERMONT UTILITIES BASED ON GEOTECHNICAL INVESTIGATIONS, SHALL BE WRAPPED WITH POLYETHYLENE FILM, AWWA C105. SEE APPENDIX C. THE MINIMUM STANDARD LENGTH OF PIPE SHALL BE EIGHTEEN (18) FEET.

## WATER SYSTEM TESTING REQUIREMENTS:

1. THE CONTRACTOR SHALL PERFORM HYDROSTATIC TESTING OF ALL WATER DISTRIBUTION SYSTEMS, AS SET FORTH IN THE FOLLOWING AND SHALL CONDUCT SAID TESTS IN THE PRESENCE OF REPRESENTATIVES FROM CITY OF CLERMONT UTILITIES AND/OR OTHER AUTHORIZED AGENCIES. THE CONTRACTOR SHALL PROVIDE 48 HOURS ADVANCED NOTICE PRIOR TO TESTING OF THE WATER DISTRIBUTION SYSTEM.

2. ALL TESTING REQUIRED BY CITY OF APOPKA UTILITIES SHALL BE PAID FOR BY THE DEVELOPER / CONTRACTOR. 3

3. ALL PROPOSED WATER MAINS SHALL BE TESTED AND CLEARED FOR SERVICE IN ACCORDANCE WITH THE LATEST AWWA STANDARDS AND THE FLORIDA DEPARTMENT OF ENVIRONMENTAL PROTECTION REQUIREMENTS.

4. PRIOR TO HYDROSTATIC TESTING A PRELIMINARY FLUSHING SHALL BE REQUIRED THROUGH FULL DIAMETER FLUSHING OR SWABBING. PRELIMINARY FLUSHING/SWABBING SHALL BE PERFORMED PER AWWA C651 STANDARD – "DISINFECTING WATER MAINS". ALL PIPING SHALL BE THOROUGHLY CLEANED AND FLUSHED PRIOR TO TESTING TO CLEAR THE LINES OF ALL FOREIGN MATTER. WHILE THE PIPING IS BEING FILLED WITH WATER, CARE SHALL BE EXERCISED TO PERMIT THE ESCAPE OF AIR FROM EXTREMITIES ALONG THE TEST SECTION.

5. HYDROSTATIC TESTING SHALL CONSIST OF PRESSURE TEST AND LEAKAGE TEST. PIPING AND APPURTENANCES TO BE TESTED SHALL BE WITHIN SECTIONS BETWEEN VALVES, NOT EXCEEDING 2,000 FEET, UNLESS ALTERNATE METHODS HAVE RECEIVED PRIOR APPROVAL FROM CITY OF CLERMONT UTILITIES. TESTING SHALL NOT PROCEED UNTIL CONCRETE THRUST BLOCKS ARE IN PLACE AND CURED, OR OTHER RESTRAINING DEVICES INSTALLED.

6. HYDROSTATIC TESTING SHALL BE PERFORMED AT 150 POUNDS PER SQUARE INCH PRESSURE, UNLESS OTHERWISE APPROVED BY CITY OF CLERMONT UTILITIES, FOR A PERIOD OF NOT LESS THAN TWO (2) HOURS.

7. THE ALLOWABLE RATE OF LEAKAGE SHALL BE LESS THAN THE NUMBER OF GALLONS PER HOUR DETERMINED BY THE FOLLOWING FORMULA:

$$L = \frac{SD*\sqrt{P}}{148{,}000}$$

WHERE:
L = ALLOWABLE LEAKAGE, IN GALLONS PER HOUR
S = LENGTH OF PIPE TESTED, IN FEET
D = NOMINAL DIAMETER OF PIPE, IN INCHES
P = AVERAGE TEST PRESSURE DURING THE LEAKAGE TEST, IN POUNDS PER SQUARE INCH (GAUGE)

8. SHOULD THE TEST FAIL, NECESSARY REPAIRS SHALL BE ACCOMPLISHED BY THE CONTRACTOR AND THE TEST REPEATED UNTIL WITHIN PASSING LIMITS. THE CONTRACTOR SHALL FURNISH ALL THE NECESSARY LABOR, PUMPS, GAUGES AND ALL OTHER ITEMS NECESSARY TO CONDUCT THE REQUIRED WATER DISTRIBUTION SYSTEM TESTING AND PERFORM NECESSARY REPAIRS.

## SEWER SYSTEM TESTING REQUIREMENTS:

1. THE CONTRACTOR SHALL PERFORM TESTING OF ALL SANITARY SEWAGE GRAVITY COLLECTION SYSTEMS, AS SET FORTH IN THE FOLLOWING AND SHALL CONDUCT SAID TESTS IN THE PRESENCE OF REPRESENTATIVES FROM CITY OF CLERMONT UTILITIES AND/OR OTHER AUTHORIZED AGENCIES. THE CONTRACTOR SHALL PROVIDE 48 HOURS ADVANCED NOTICE PRIOR TO TESTING OF THE WASTEWATER DISTRIBUTION SYSTEM.

2. ALL TESTING REQUIRED BY CITY OF APOPKA UTILITIES SHALL BE PAID FOR BY THE DEVELOPER / CONTRACTOR. 3

3. GRAVITY MAINS SHALL BE INSPECTED WITH CCTV FOR ALIGNMENT, GRADE VARIATIONS, SEPARATED PIPES, LEAKS, DEFLECTION, CRACKED, BROKEN OR OTHERWISE DEFECTIVE PIPE TO ENSURE OVERALL PIPE INTEGRITY. THE APPROVED CCTV INSPECTION CONTRACTOR SHALL SUBMIT THE REPORT TO THE UTILITIES DEPARTMENT AS REQUIRED.

4. LEAKAGE TESTING FOR GRAVITY MAINS SHALL BE BY LOW-PRESSURE AIR TEST. LEAKAGE TESTING SHALL BE CONDUCTED IN ACCORDANCE WITH THE PROCEDURE FOR "RECOMMENDED PRACTICE FOR LOW PRESSURE AIR TESTING OF INSTALLED SEWER PIPE" AS ESTABLISHED BY THE UNI-BELL PVC PIPE ASSOCIATION.

5. EACH GRAVITY MAIN LEAKAGE TEST SECTION SHALL NOT EXCEED 400 FEET IN LENGTH AND SHALL BE TESTED BETWEEN ADJACENT MANHOLES.

## FDEP UTILITY CONSTRUCTION NOTES:

1. NOTE TO THE UTILITY: PURSUANT TO 62-555.345; DO NOT PROVIDE WATER SERVICE TO THIS PROJECT (OTHER THAN FLUSHING/TESTING) UNTIL THE DEPARTMENT OF ENVIRONMENTAL PROTECTION HAS ISSUED A LETTER OF CLEARANCE OR THE UTILITY SHALL BE SUBJECT TO ENFORCEMENT ACTION.

2. THE PERMITTEE WILL PROMPTLY NOTIFY THE DEPARTMENT UPON SALE OR LEGAL TRANSFER OF THE PERMITTED FACILITY

3. ALL WATER MAINS AND APPURTENANCES SHALL BE DISINFECTED AND BACTERIOLOGICALLY EVALUATED IN ACCORDANCE WITH RULE 62-555.340, F.A.C.

4. ALL WATER MAIN PIPE, INCLUDING FITTINGS SHALL BE COLOR CODED OR MARKED USING BLUE AS A PREDOMINANT COLOR TO DIFFERENTIATE DRINKING WATER FROM RECLAIMED OR OTHER WATER. UNDERGROUND PLASTIC PIPE SHALL BE SOLID-WALL BLUE PIPE, SHALL HAVE A CO-EXTRUDED BLUE EXTERNAL SKIN, OR SHALL BE WHITE OR BLACK PIPE WITH BLUE STRIPES INCORPORATED INTO, OR APPLIED TO, THE PIPE WALL; AND UNDERGROUND METAL OR CONCRETE PIPE SHALL HAVE BLUE STRIPES APPLIED TO THE PIPE WALL. PIPE STRIPED DURING MANUFACTURING OF THE PIPE SHALL HAVE CONTINUOUS STRIPES THAT RUN PARALLEL TO THE AXIS OF THE PIPE, THAT ARE LOCATED AT NO GREATER THAN 90-DEGREE INTERVALS AROUND THE PIPE, AND THAT WILL REMAIN INTACT DURING AND AFTER INSTALLATION OF THE PIPE. IF TAPE OR PAINT IS USED TO STRIPE PIPE DURING INSTALLATION OF THE PIPE, THE TAPE OR PAINT SHALL BE APPLIED IN A CONTINUOUS LINE THAT RUNS PARALLEL TO THE AXIS OF THE PIPE AND THAT IS LOCATED ALONG THE TOP OF THE PIPE; FOR PIPES WITH AN INTERNAL DIAMETER OF 24 INCHES OR GREATER, TAPE OR PAINT SHALL BE APPLIED IN CONTINUOUS LINES ALONG EACH SIDE OF THE PIPE AS WELL AS ALONG THE TOP OF THE PIPE.

## FDEP UTILITY SEPARATION REQUIREMENTS

(62-555.314, F.A.C. LOCATION OF PUBLIC WATER SYSTEM MAINS)

FOR THE PURPOSE OF THIS SECTION, THE PHRASE "WATER MAINS" SHALL MEAN MAINS, INCLUDING TREATMENT PLANT PROCESS PIPING, CONVEYING EITHER RAW, PARTIALLY TREATED, OR FINISHED DRINKING WATER; FIRE HYDRANT LEADS; AND SERVICE LINES THAT ARE UNDER THE CONTROL OF A PUBLIC WATER SYSTEM AND THAT HAVE AN INSIDE DIAMETER OF THREE INCHES OR GREATER.

(1) HORIZONTAL SEPARATION BETWEEN UNDERGROUND WATER MAINS AND SANITARY OR STORM SEWERS, WASTEWATER OR STORMWATER FORCE MAINS, RECLAIMED WATER PIPELINES, AND ON-SITE SEWAGE TREATMENT AND DISPOSAL SYSTEMS.

    (a) NEW OR RELOCATED, UNDERGROUND WATER MAINS SHALL BE LAID TO PROVIDE A HORIZONTAL DISTANCE OF AT LEAST THREE FEET BETWEEN THE OUTSIDE OF THE WATER MAIN AND THEOUTSIDE OF ANY EXISTING OR PROPOSED STORM SEWER, STORMWATER FORCE MAIN, OR PIPELINE CONVEYING RECLAIMED WATER REGULATED UNDER PART III OF CHAPTER 62-610, F.A.C.
    (b) NEW OR RELOCATED, UNDERGROUND WATER MAINS SHALL BE LAID TO PROVIDE A HORIZONTAL DISTANCE OF AT LEAST THREE FEET, AND PREFERABLY TEN FEET, BETWEEN THE OUTSIDE OF THE WATER MAIN AND THE OUTSIDE OF ANY EXISTING OR PROPOSED VACUUM-TYPE SANITARY SEWER.
    (c) NEW OR RELOCATED, UNDERGROUND WATER MAINS SHALL BE LAID TO PROVIDE A HORIZONTAL DISTANCE OF AT LEAST SIX FEET, AND PREFERABLY TEN FEET, BETWEEN THE OUTSIDE OF THE WATER MAIN AND THE OUTSIDE OF ANY EXISTING OR PROPOSED GRAVITY- OR PRESSURE-TYPE SANITARY SEWER, WASTEWATER FORCE MAIN, OR PIPELINE CONVEYING RECLAIMED WATER NOT REGULATED UNDER PART III OF CHAPTER 62-610, F.A.C. THE MINIMUM HORIZONTAL SEPARATION DISTANCE BETWEEN WATER MAINS AND GRAVITY-TYPE SANITARY SEWERS SHALL BE REDUCED TO THREE FEET WHERE THE BOTTOM OF THE WATER MAIN IS LAID AT LEAST SIX INCHES ABOVE THE TOP OF THE SEWER.
    (d) NEW OR RELOCATED, UNDERGROUND WATER MAINS SHALL BE LAID TO PROVIDE A HORIZONTAL DISTANCE OF AT LEAST TEN FEET BETWEEN THE OUTSIDE OF THE WATER MAIN AND ALL PARTS OF ANY EXISTING OR PROPOSED "ON-SITE SEWAGE TREATMENT AND DISPOSAL SYSTEM" AS DEFINED IN SECTION 381.0065(2), F.S., AND RULE 64E-6.002, F.A.C.

(2) VERTICAL SEPARATION BETWEEN UNDERGROUND WATER MAINS AND SANITARY OR STORM SEWERS, WASTEWATER OR STORMWATER FORCE MAINS, AND RECLAIMED WATER PIPELINES.

    (a) NEW OR RELOCATED, UNDERGROUND WATER MAINS CROSSING ANY EXISTING OR PROPOSED GRAVITY- OR VACUUM-TYPE SANITARY SEWER OR STORM SEWER SHALL BE LAID SO THE OUTSIDE OF THE WATER MAIN IS AT LEAST SIX INCHES, AND PREFERABLY 12 INCHES, ABOVE OR AT LEAST 12 INCHES BELOW THE OUTSIDE OF THE OTHER PIPELINE. HOWEVER, IT IS PREFERABLE TO LAY THE WATER MAIN ABOVE THE OTHER PIPELINE.
    (b) NEW OR RELOCATED, UNDERGROUND WATER MAINS CROSSING ANY EXISTING OR PROPOSED PRESSURE-TYPE SANITARY SEWER, WASTEWATER OR STORMWATER FORCE MAIN, OR PIPELINE CONVEYING RECLAIMED WATER SHALL BE LAID SO THE OUTSIDE OF THE WATER MAIN IS AT LEAST 12 INCHES ABOVE OR BELOW THE OUTSIDE OF THE OTHER PIPELINE. HOWEVER, IT IS PREFERABLE TO LAY THE WATER MAIN ABOVE THE OTHER PIPELINE.
    (c) AT THE UTILITY CROSSINGS DESCRIBED IN PARAGRAPHS (A) AND (B) ABOVE, ONE FULL LENGTH OF WATER MAIN PIPE SHALL BE CENTERED ABOVE OR BELOW THE OTHER PIPELINE SO THE WATER MAIN JOINTS WILL BE AS FAR AS POSSIBLE FROM THE OTHER PIPELINE. ALTERNATIVELY, AT SUCH CROSSINGS, THE PIPES SHALL BE ARRANGED SO THAT ALL WATER MAIN JOINTS ARE AT LEAST THREE FEET FROM ALL JOINTS IN VACUUM-TYPE SANITARY SEWERS, STORM SEWERS, STORMWATER FORCE MAINS, OR PIPELINES CONVEYING RECLAIMED WATER REGULATED UNDER PART III OF CHAPTER 62-610, F.A.C., AND AT LEAST SIX FEET FROM ALL JOINTS IN GRAVITY- OR PRESSURE-TYPE SANITARY SEWERS, WASTEWATER FORCE MAINS, OR PIPELINES CONVEYING RECLAIMED WATER NOT REGULATED UNDER PART III OF CHAPTER 62-610, F.A.C.

(3) SEPARATION BETWEEN WATER MAINS AND SANITARY OR STORM SEWER MANHOLES.

    (a) NO WATER MAIN SHALL PASS THROUGH, OR COME INTO CONTACT WITH, ANY PART OF A SANITARY SEWER MANHOLE.
    (b) EFFECTIVE AUGUST 28, 2003, WATER MAINS SHALL NOT BE CONSTRUCTED OR ALTERED TO PASS THROUGH, OR COME INTO CONTACT WITH, ANY PART OF A STORM SEWER MANHOLE OR INLET STRUCTURE.

(4) SEPARATION BETWEEN FIRE HYDRANT DRAINS AND SANITARY OR STORM SEWERS, WASTEWATER OR STORMWATER FORCE MAINS, RECLAIMED WATER PIPELINES, AND ON-SITE SEWAGE TREATMENT AND DISPOSAL SYSTEMS. NEW OR RELOCATED FIRE HYDRANTS WITH UNDERGROUND DRAINS SHALL BE LOCATED SO THAT THE DRAINS ARE AT LEAST THREE FEET FROM ANY EXISTING OR PROPOSED STORM SEWER, STORMWATER FORCE MAIN, OR PIPELINE CONVEYING RECLAIMED WATER REGULATED UNDER PART III OF CHAPTER 62-610, F.A.C.; AT LEAST THREE FEET, AND PREFERABLY TEN FEET, FROM ANY EXISTING OR PROPOSED VACUUM-TYPE SANITARY SEWER; AT LEAST SIX FEET, AND PREFERABLY TEN FEET, FROM ANY EXISTING OR PROPOSED GRAVITY- OR PRESSURE-TYPE SANITARY SEWER, WASTEWATER FORCE MAIN, OR PIPELINE CONVEYING RECLAIMED WATER NOT REGULATED UNDER PART III OF CHAPTER 62-610, F.A.C.; AND AT LEAST TEN FEET FROM ANY EXISTING OR PROPOSED "ON-SITE SEWAGE TREATMENT AND DISPOSAL SYSTEM" AS DEFINED IN SECTION 381.0065(2), F.S., AND RULE 64E-6.002, F.A.C.

**LOCATION OF PUBLIC WATER SYSYEM MAINS IN ACCORDANCE WITH F.A.C. RULE 62-555.314**

| Other Pipe | Horizontal Separation | Crossings (1) | Joint Spacing @ Crossings (Full Joint Centered) |
|---|---|---|---|
| **Storm Sewer, Stormwater Force Main, Reclaimed Water (2)** | Water Main<br>3 ft. minimum | Water Main<br>12 inches is the minimum, except for storm sewer, then 6 inches is the minimum and 12 inches is preferred | Alternate 3 ft. minimum<br>Water Main |
| **Vacuum Sanitary Sewer** | Water Main<br>10 ft. preferred<br>3 ft. minimum | Water Main<br>12 inches preferred<br>6 inches minimum | Alternate 3 ft. minimum<br>Water Main |
| **Gravity or Pressure Sanitary Sewer, Sanitary Sewer Force Main, Reclaimed Water (4)** | Water Main<br>10 ft. preferred<br>6 ft. minimum (3) | Water Main<br>12 inches is the minimum, except for gravity sewer, then 6 inches is the minimum and 12 inches is preferred | Alternate 6 ft. minimum<br>Water Main |
| **On-Site Sewage Treatment & Disposal System** | 10 ft. minimum | --- | --- |

(1) Water main should cross above other pipe. When water main must be below other pipe, the minimum separation is 12 inches.
(2) Reclaimed water regulated under Part III of Chapter 62-610, F.A.C.
(3) 3 ft. for gravity sanitary sewer where the bottom of the water main is laid at least 6 inches above the top of the gravity sanitary sewer.
(4) Reclaimed water not regulated under Part III of Chapter 62-610, F.A.C.

Disclaimer – This document is provided for your convenience only. Please refer to F.A.C. Rule 62-555.314 for additional construction requirements.

Call 48 hours before you dig
It's the Law!
1-800-432-4770
Sunshine State One Call of Florida, Inc.

**SHEET 12 OF 22**

| REV. | DATE | BY |
|---|---|---|
| 1 | 09/17/19 | CITY OF APOPKA COMMENTS DATED 09/17/19 SCS |
| 2 | 08/27/19 | CITY OF APOPKA COMMENTS DATED 08/27/19 SCS |

DESCRIPTION

CIVIL ENGINEERING | LAND PLANNING
APPIAN ENGINEERING LLC.
APPIANFL.COM • 407.960.5868
2221 LAKE ROAD, SUITE 27, WINTER PARK, FLORIDA 32789
STATE OF FLORIDA CERTIFICATE OF AUTHORIZATION NO. 32574

UTILITY NOTES

CENTRAL FLORIDA PREPARATORY SCHOOL
CITY OF APOPKA, FLORIDA

DRAWN: S. SIERRA-GIL
DESIGNED: L. CLASSON
CHECKED: L. CLASSON
DATE: 7/1/2019
SCALE: N.T.S
PROJECT: MMI-006
SHEET: C4.0

9/19/19

P:_project drawings\mmi-006 central fl preparatory school\Drawings\cad civil3d\Layouts\04 final development plan\UTILITY NOTES.dwg Modified:9/17/2019 By:ssierragil Plotted By:sofia sierra-gil

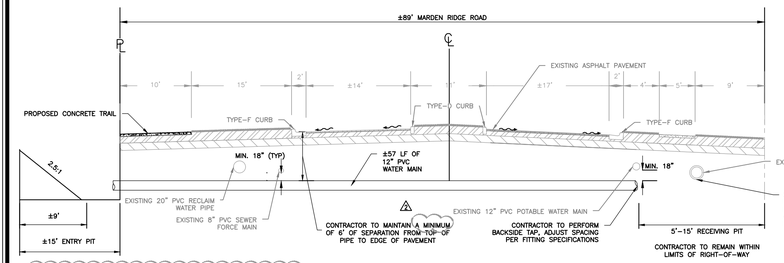


NOTE:
- CONTRACTOR TO VERIFY LOCATION AND ELEVATION OF ALL EXISTING PIPES WITHIN AREA TO BE AFFECTED PRIOR TO BEGINNING DIRECTIONAL DRILLING.
- CONTRACTOR TO MAINTAIN A MINIMUM OF 18" OF SEPARATION BETWEEN PROPOSED WATER MAIN AND ALL EXISTING PIPES.

## DIRECTIONAL DRILL

N.T.S

NOTE:
- CONTRACTOR TO MAINTAIN A MINIMUM OF 3' OF COVER BETWEEN THE PROPOSED PIPE AND THE EXISTING GROUND.

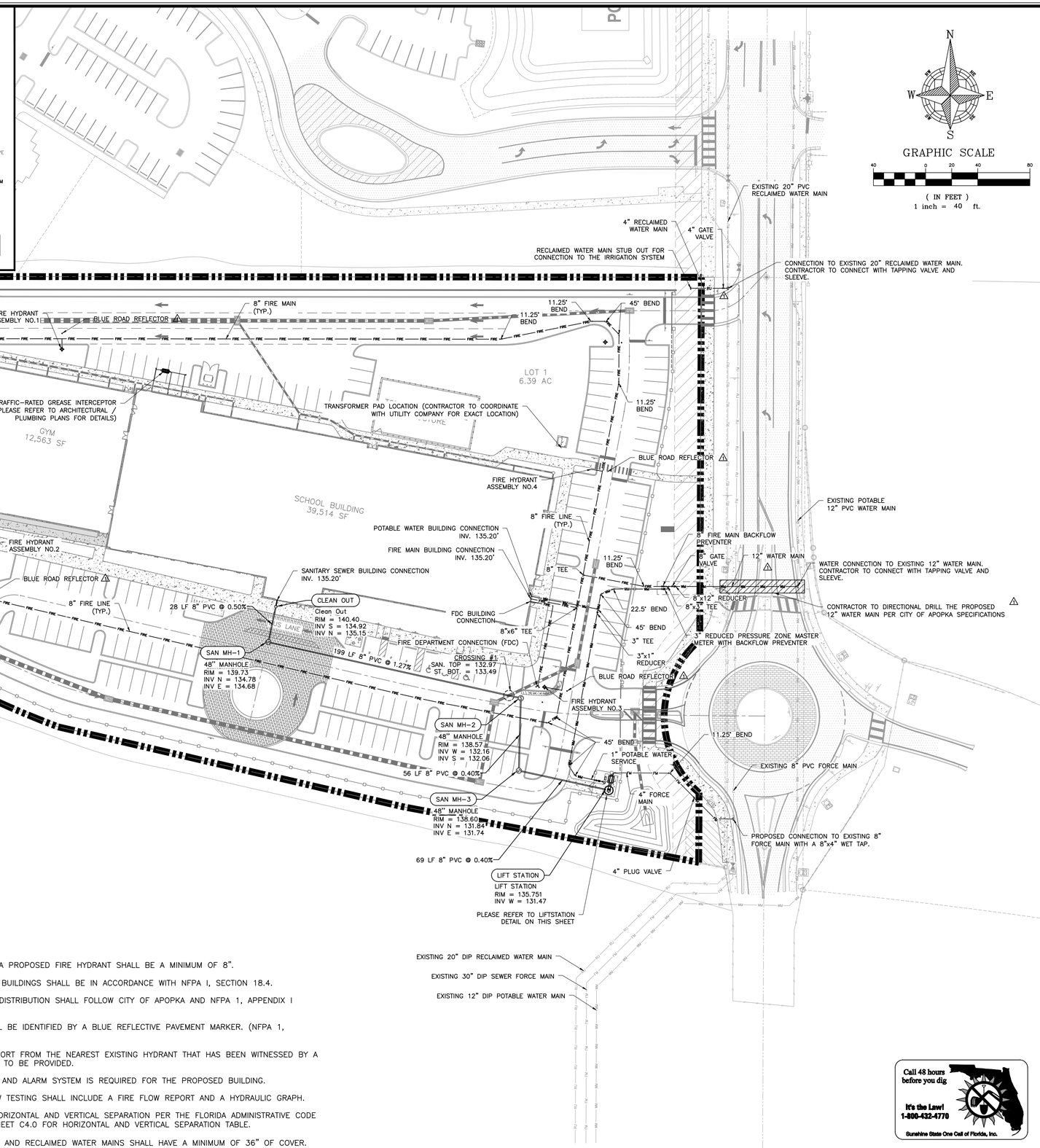


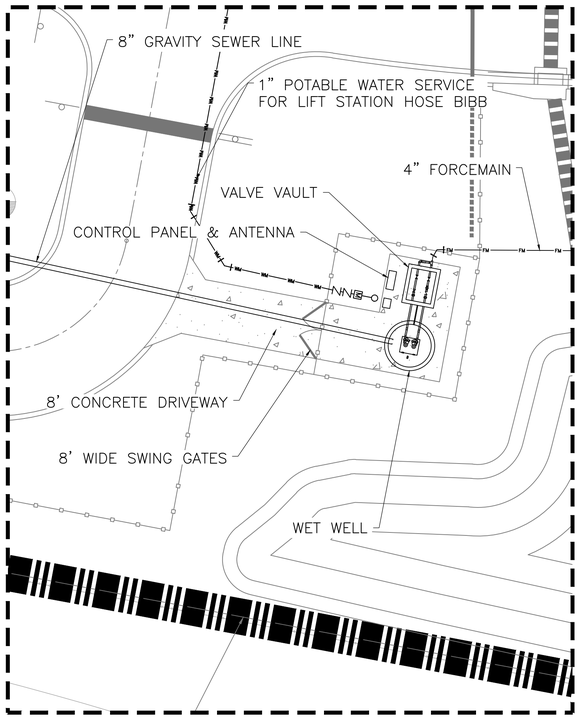


## LIFT STATION DETAIL

UTILITY NOTES:

1. ALL WATER MAINS LEADING TO A PROPOSED FIRE HYDRANT SHALL BE A MINIMUM OF 8".
2. FIRE FLOW REQUIREMENTS FOR BUILDINGS SHALL BE IN ACCORDANCE WITH NFPA I, SECTION 18.4.
3. FIRE HYDRANT LOCATIONS AND DISTRIBUTION SHALL FOLLOW CITY OF APOPKA AND NFPA 1, APPENDIX I REQUIREMENTS.
4. FIRE HYDRANT LOCATIONS SHALL BE IDENTIFIED BY A BLUE REFLECTIVE PAVEMENT MARKER. (NFPA 1, CHAPTER 18.5.7)
5. A FIRE FLOW TEST RESULT REPORT FROM THE NEAREST EXISTING HYDRANT THAT HAS BEEN WITNESSED BY A UTILITIES INSPECTOR WILL NEED TO BE PROVIDED.
6. AN AUTOMATIC FIRE SPRINKLER AND ALARM SYSTEM IS REQUIRED FOR THE PROPOSED BUILDING.
7. DOCUMENTATION FOR FIRE FLOW TESTING SHALL INCLUDE A FIRE FLOW REPORT AND A HYDRAULIC GRAPH.
8. CONTRACTOR SHALL PROVIDE HORIZONTAL AND VERTICAL SEPARATION PER THE FLORIDA ADMINISTRATIVE CODE (F.A.C.). PLEASE REFER TO SHEET C4.0 FOR HORIZONTAL AND VERTICAL SEPARATION TABLE.
10. ALL PROPOSED POTABLE WATER AND RECLAIMED WATER MAINS SHALL HAVE A MINIMUM OF 36" OF COVER.
11. ALL ROADWAYS, WATER LINE INFRASTRUCTURE AND FIRE HYDRANTS SHALL BE IN PLACE BEFORE BUILDING CONSTRUCTION MAY BEGIN.

Call 48 hours before you dig
It's the Law!
1-800-432-4770
Sunshine State One Call of Florida, Inc.

**SHEET 13 OF 22**

| REV. | DATE | BY |
|---|---|---|
| 1 | 09/17/19 | CITY OF APOPKA COMMENTS DATED 09/17/19 — SCS |
| 2 | 08/27/19 | CITY OF APOPKA COMMENTS DATED 08/27/19 — SCS |

DESCRIPTION

CIVIL ENGINEERING | LAND PLANNING
**APPIAN ENGINEERING LLC.**
APPIANFL.COM • 407.960.5868
2221 Lee Road, Suite 27, Winter Park, Florida 32789
STATE OF FLORIDA CERTIFICATE OF AUTHORIZATION NO. 32574

UTILITY PLAN

CENTRAL FLORIDA PREPARATORY SCHOOL
CITY OF APOPKA, FLORIDA

| | |
|---|---|
| DRAWN: S. SIERRA-GIL | DESIGNED: L. CLASSON |
| CHECKED: L. CLASSON | DATE: 9/5/2019 |
| SCALE 1" = 40' | PROJECT MMI-006 |
| SHEET C4.1 | |

9/19/19

P:_project drawings\mmi-006 central fl preparatory school\Drawings\cad civil3d\Layouts\04 final development plan\UTILITY PLAN.dwg Modified:9/17/2019 By:ssierragil Plotted By:sofia sierra-gil

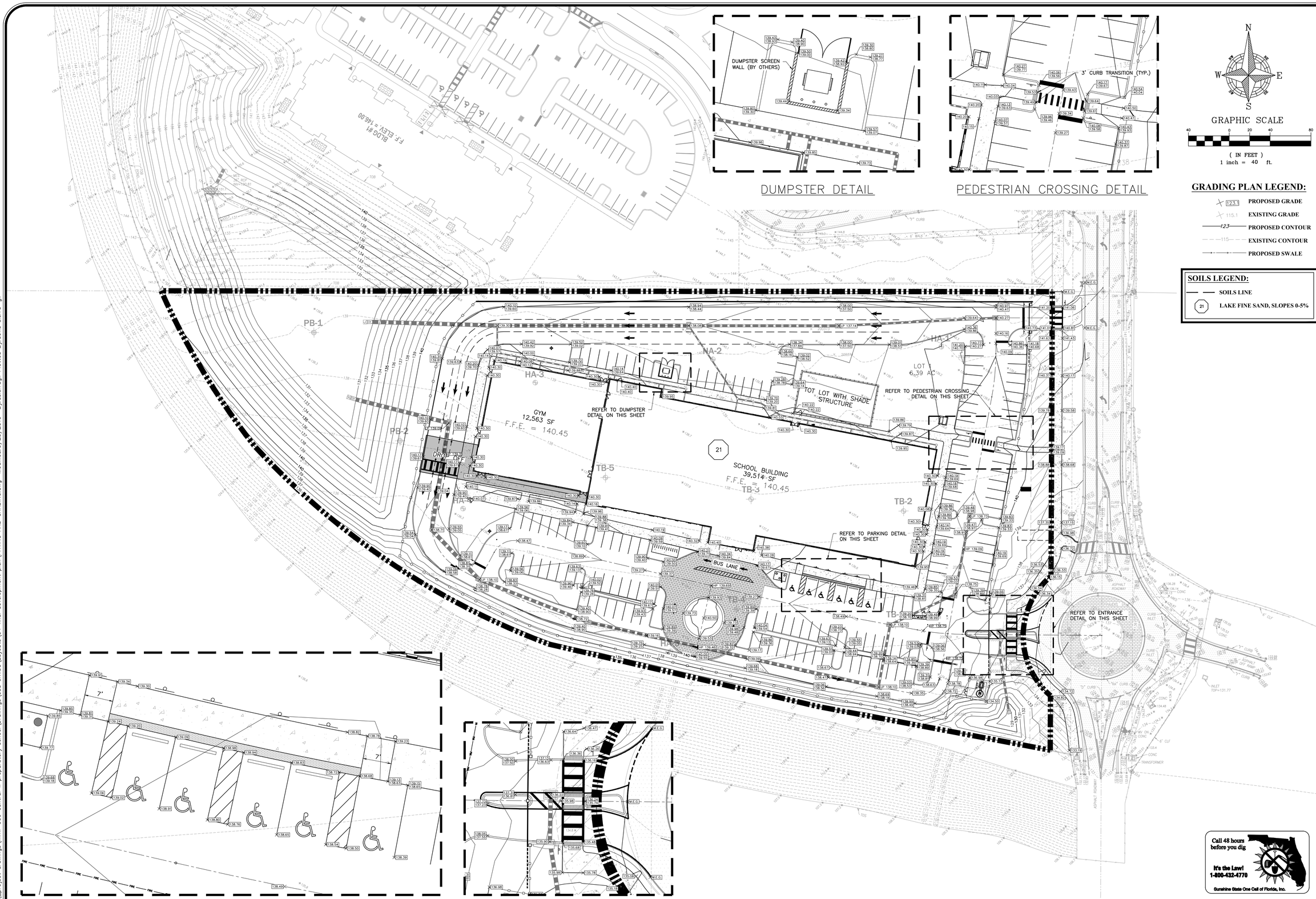


SHEET 14 OF 22

| REV. | DATE | DESCRIPTION | BY |
|---|---|---|---|
| A | 09/17/19 | CITY OF APOPKA COMMENTS DATED 09/17/19 | SCS |
| A | 08/27/19 | CITY OF APOPKA COMMENTS DATED 08/27/19 | SCS |

CIVIL ENGINEERING | LAND PLANNING

**APPIAN ENGINEERING LLC.**

APPIANEL.COM • 407.960.5668

2221 Lee Road, Suite 27, Winter Park, Florida 32789

STATE OF FLORIDA CERTIFICATE OF AUTHORIZATION NO. 32574

PAVING & GRADING PLAN

CENTRAL FLORIDA PREPARATORY SCHOOL
CITY OF APOPKA, FLORIDA

| | |
|---|---|
| DRAWN: S. SIERRA-GIL | DESIGNED: L. CLASSON |
| CHECKED: L. CLASSON | DATE: 9/23/2019 |
| SCALE 1" = 40' | PROJECT MMI-006 |
| SHEET C5.0 | |

9/23/19

P:_project drawings\mmi-006 central fl preparatory school\Drawings\cad civil3d\Layouts\04 final development plan\PAVING AND GRADING.dwg Modified:9/23/2019 By:sslerrogil Plotted By:sofia sierra-gil

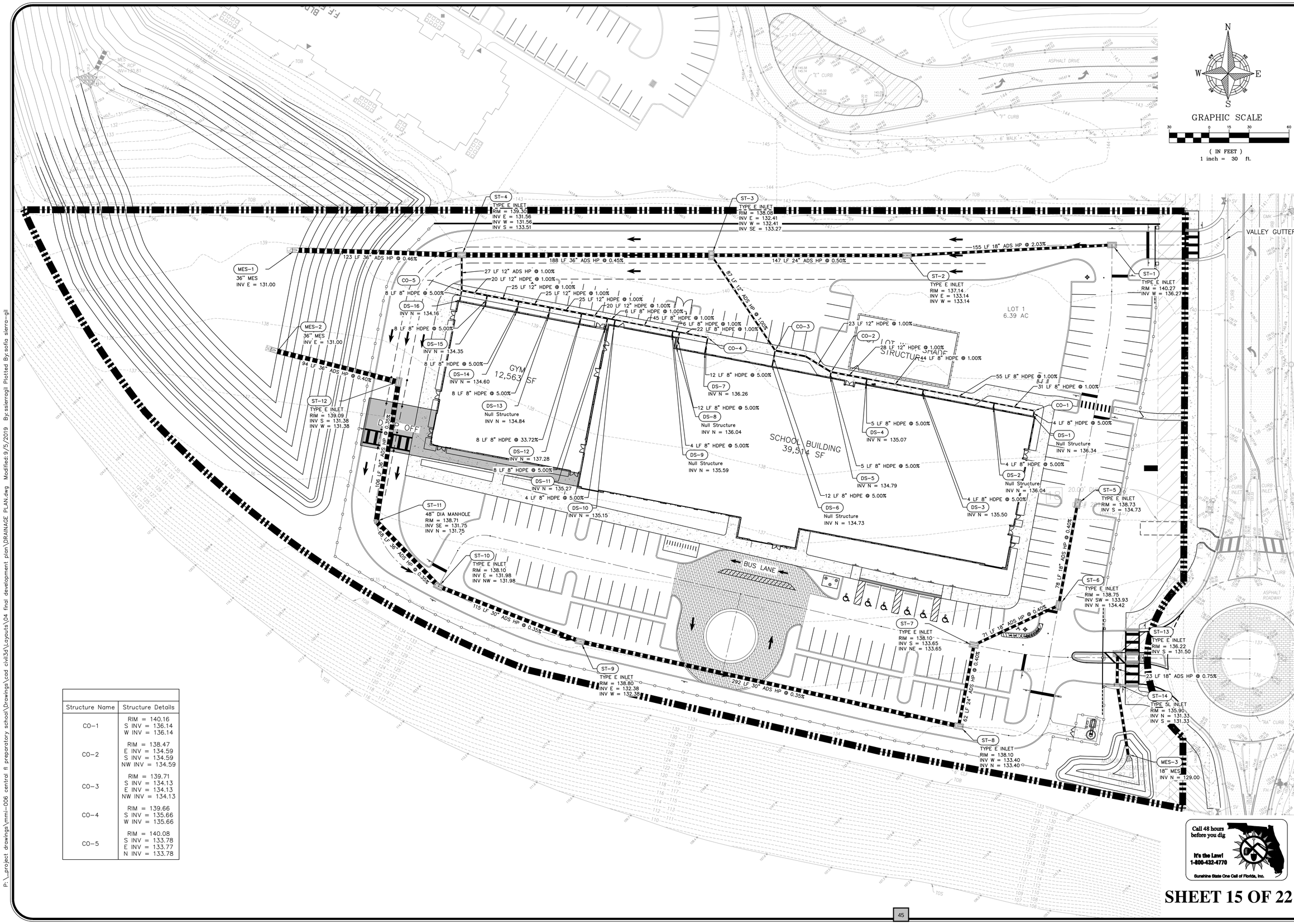


| Structure Name | Structure Details |
|---|---|
| CO-1 | RIM = 140.16<br>S INV = 136.14<br>W INV = 136.14 |
| CO-2 | RIM = 138.47<br>E INV = 134.59<br>S INV = 134.59<br>NW INV = 134.59 |
| CO-3 | RIM = 139.71<br>S INV = 134.13<br>E INV = 134.13<br>NW INV = 134.13 |
| CO-4 | RIM = 139.66<br>S INV = 135.66<br>W INV = 135.66 |
| CO-5 | RIM = 140.08<br>S INV = 133.78<br>E INV = 133.77<br>N INV = 133.78 |

| REV. | DATE | DESCRIPTION | BY |
|---|---|---|---|
| 1 | 09/17/19 | CITY OF APOPKA COMMENTS DATED 09/17/19 | SCS |
| 2 | 08/27/19 | CITY OF APOPKA COMMENTS DATED 08/27/19 | SCS |

CIVIL ENGINEERING | LAND PLANNING

**APPIAN ENGINEERING LLC.**

APPIANFL.COM • 407.960.5868

2221 Lee Road, Suite 27, Winter Park, Florida 32789

STATE OF FLORIDA CERTIFICATE OF AUTHORIZATION NO. 32574

# DRAINAGE PLAN

CENTRAL FLORIDA PREPARATORY SCHOOL
CITY OF APOPKA, FLORIDA

DRAWN: S. SIERRA-GIL
DESIGNED: L. CLASSON
CHECKED: L. CLASSON
DATE: 9/5/2019
SCALE: 1" = 30'
PROJECT: MMI-006
SHEET: C6.0

9/23/19

**SHEET 15 OF 22**

P:_project drawings\mmi-006 central fl preparatory school\Drawings\cad civil3d\Layouts\04 final development plan\DRAINAGE PLAN.dwg Modified:9/5/2019 By:ssierragil Plotted By:sofia sierra-gil

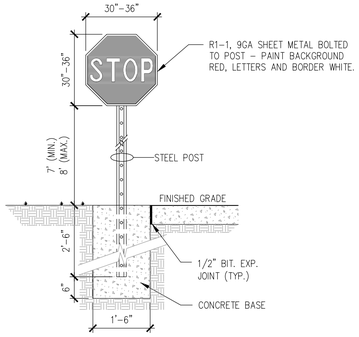


1 STOP SIGN
N.T.S.

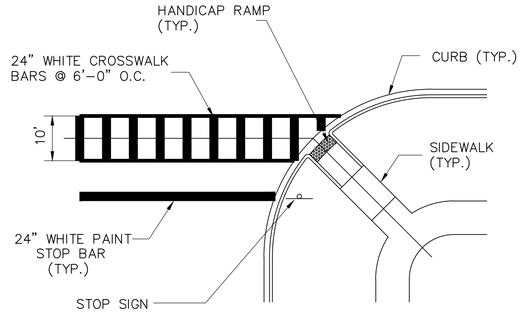


2 INTERSECTION CROSSWALK/ STOP BAR DETAIL
N.T.S.

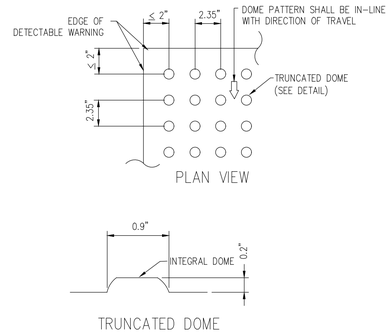


**NOTE:**

1. CURB RAMP RUNNING SLOPES SHALL NOT BE STEEPER THAN 1:12 AND CROSS SLOPE SHALL BE 0.02 OR FLATTER.

2. DETECTABLE WARNING SURFACES SHALL BE CONSTRUCTED BY TEXTURING OR APPLYING A TRUNCATED DOME MATERIAL IN CONFORMANCE WITH THE U.S. DEPARTMENT OF JUSTICE A.D.A. STANDARDS FOR ACCESSIBLE DESIGN, A.D.A. ACCESSIBILITY GUIDELINES, SECTION 4.29.2. TRANSITION SLOPES ARE NOT TO HAVE DETECTABLE WARNINGS.

3. WHERE A CURB RAMP IS CONSTRUCTED WITHIN AN EXISTING CURB, CURB AND GUTTER AND/OR SIDEWALK, THE EXISTING CURB OR CURB AND GUTTER SHALL BE REMOVED TO THE NEAREST JOINT BEYOND THE CURB TRANSITIONS OR TO THE EXTENT THAT NO REMAINING SECTION OF CURB OR CURB AND GUTTER IS LESS THAN 5' LONG. THE EXISTING SIDEWALK SHALL BE REMOVED TO THE NEAREST JOINT BEYOND THE TRANSITION SLOPE WALK AROUND OR TO THE EXTENT THAT NO REMAINING SECTION OF SIDEWALK IS LESS THAN 5'.

4. WHERE ADJACENT WALKING SURFACES ARE COLORED OR ARE CONSTRUCTED WITH MATERIALS OTHER THAN STANDARD CLASS I PORTLAND CEMENT CONCRETE IN ACCORDANCE WITH SECTION 522 OF THE SPECIFICATIONS, THE PLAN MUST PROVIDE FOR DETECTABLE WARNING SURFACE COLORS OR MATERIALS THAT PROVIDE THE NECESSARY CONTRAST, EITHER DARK–ON–LIGHT OR LIGHT–ON–DARK. (SAFETY YELLOW OR BRICK RED)

5. RECOMMENDED MANUFACTURER: ENGINEERED PLASTICS, INC. (ARMOR TILE) OLYMPIC TOWERS, 300 PEARL STREET, SUITE 200, BUFFALO, NY 14202. PHONE: (800) 682–2525

3 DETECTABLE WARNING
N.T.S.

**NOTE 1:**
REFERENCE FDOT INDEX 304, PAGE 1, GENERAL AND DESIGN NOTES FOR RAMPS IN R.O.W.

**NOTE 2:**
CONSTRUCT RAMP TO LEAST POSSIBLE SLOPE (MAX = 1:12). CROSS SLOPE OF RAMP AND LANDING SHALL NOT EXCEED 1:50.

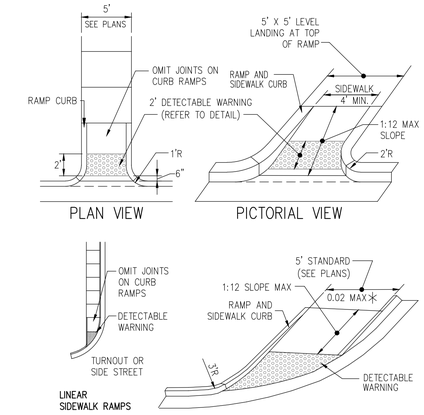


4 HANDICAP END RAMP
3000 PSI (MIN.) CONCRETE N.T.S.

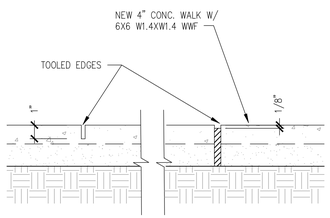


NOTE:
EXPANSION JOINTS SHALL BE LOCATED AT ALL CONCRETE WALK INTERSECTIONS, AT ALL DOOR OPENINGS AND AT 12' O.C. MAXIMUM.

EXPANSION JOINT (1/4" PREMOLDED ASPHALT STRIP) SHALL BE SET 1/8" BELOW TOP OF WALK.
SCORE MARK (1" DEPTH) SHALL BE 4' (MAX.) O.C.

5 CONCRETE WALK
N.T.S.

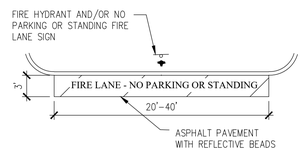


6 FIRE LANE DETAIL
N.T.S.

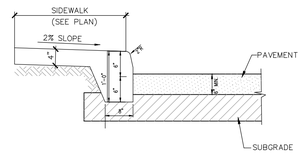


7 MONOLITHIC CURB AND SIDEWALK
(REFER TO F.D.O.T. INDEX 515) N.T.S.

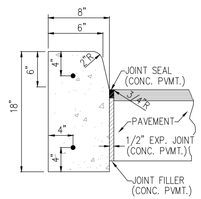


**NOTES:**

1. COST OF 2–#4 BARS (CONT.) SHALL BE INCLUDED.
2. PROVIDE 2–#6 SMOOTH BARS W/ EXPANSION CAPS AT EACH EXPANSION JOINT, 20'–0" O.C. MAX.
3. CONTRACTION JOINTS – CONTRACTION JOINTS SHALL BE PLACED AT EQUAL SPACES (10' MAX.) BETWEEN NORMAL EXPANSION JOINTS. CONTRACTION JOINTS SHALL BE SAW CUT IN THE UPPER 1/3 OF CURB AND GUTTER WITHIN 24 HOURS OF PLACEMENT.
4. ENDS OF VERTICAL CURB SHALL TRANSITION FROM FULL TO ZERO HEIGHTS IN 3 FEET.

8 TYPE 'D' CURB
(3,500 PSI (MIN)) N.T.S.

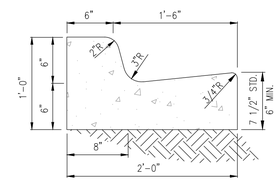


PLAN SYMBOL

NOTE:
WHEN USED ON HIGH SIDE OF ROADWAYS, THE CROSS SLOPE OF THE GUTTER SHALL MATCH THE CROSS SLOPE OF THE ADJACENT PAVEMENT AND THE THICKNESS OF THE LIP SHALL BE 6", UNLESS OTHERWISE SHOWN ON PLANS.

9 TYPE "F" CURB AND GUTTER
N.T.S.

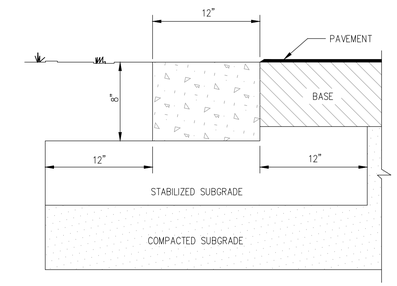


14 RIBBON CURB
3500 PSI (MIN.) N.T.S.

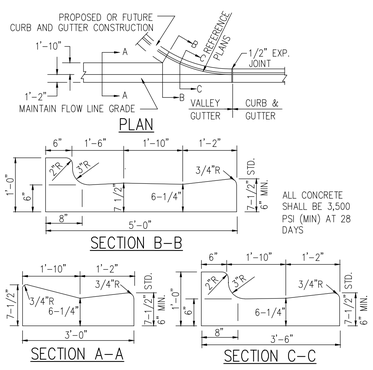


10 VALLEY GUTTER N.T.S.
(REFER TO F.D.O.T. INDEX 300)

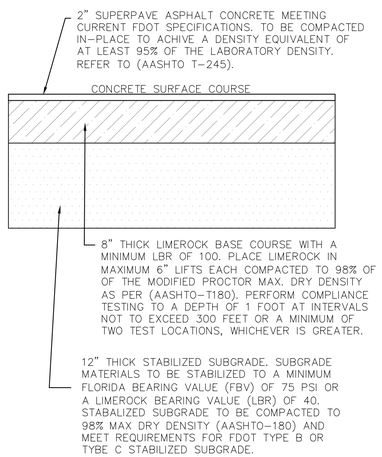


11 TYPICAL PAVEMENT SECTION
N.T.S.

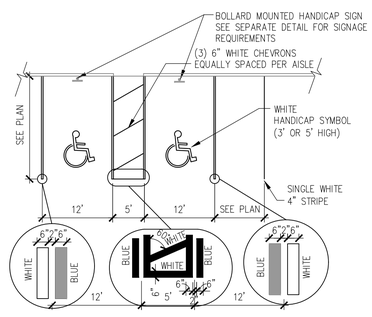


**NOTE:** FINISHED GRADES OF PAVEMENT IN HC PARKING AND ACCESSIBILITY AISLE SHALL NOT EXCEED 1:50 SLOPE IN ANY DIRECTION. SEE PLAN FOR STYLE OF HANDICAP RAMP
HANDICAP STRIPING SHALL CONFORM TO FDOT INDEX 17346 SHEET 11 OF 14 (LATEST EDITION)

12 HANDICAP STRIPING
N.T.S.

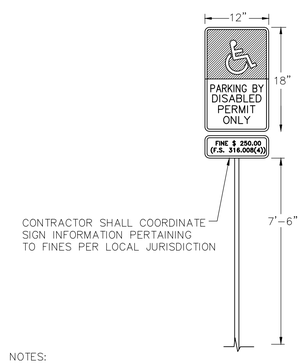


NOTES:
1. ALL LETTERS ARE 1" SERIES "C", PER MUTCD.
2. TOP PORTION OF SIGN SHALL HAVE REFLECTORIZED (ENGINEERING GRADE) BLUE BACKGROUND WITH WHITE REFLECTORIZED LEGEND AND BORDER.
3. BOTTOM PORTION OF SIGN SHALL HAVE A REFLECTORIZED (ENGINEERING GRADE) WHITE BACKGROUND WITH BLACK OPAQUE LEGEND AND BORDER.
4. ONE (1) SIGN IS REQUIRED FOR EACH PARKING SPACE.
5. HEIGHT OF SIGN SHALL 7'–6" FROM FINISHED GROUND TO BOTTOM OF SIGN.

13 HANDICAP SIGN
N.T.S.

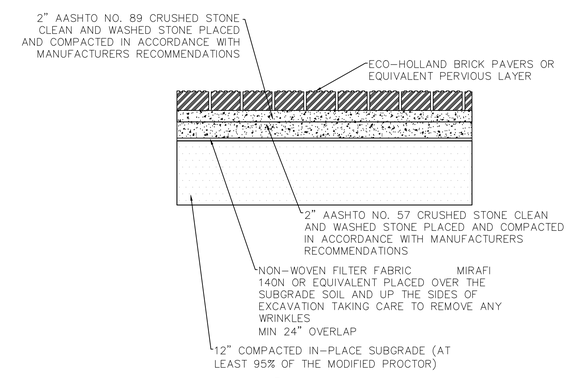


15 PERVIOUS PAVERS
N.T.S.

Call 48 hours before you dig
It's the Law!
1-800-432-4770
Sunshine State One Call of Florida, Inc.

**SHEET 16 OF 22**

| REV. | DATE | DESCRIPTION | BY |
|---|---|---|---|
| A | 09/17/19 | CITY OF APOPKA COMMENTS DATED 09/17/19 | SCS |
| A | 08/27/19 | CITY OF APOPKA COMMENTS DATED 08/27/19 | SCS |

CIVIL ENGINEERING | LAND PLANNING
**APPIAN ENGINEERING LLC.**
APPIANFL.COM • 407.960.5868
2221 Lee Road, Suite 27, Winter Park, Florida 32789
STATE OF FLORIDA CERTIFICATE OF AUTHORIZATION NO. 32574

CIVIL DETAILS

CENTRAL FLORIDA PREPARATORY SCHOOL
CITY OF APOPKA, FLORIDA

DRAWN: S. SIERRA–GIL
DESIGNED: L. CLASSON
CHECKED: L. CLASSON
DATE: 9/4/2019
SCALE: N.T.S.
PROJECT: MMI–006
SHEET: C7.0

9/19/19

P:_project drawings\rmi–006 central fl preparatory school\Drawings\cad civil3d\Layouts\04 final development plan\CIVIL DETAILS.dwg Modified:9/4/2019 By:ssierragil Plotted By:sofia sierra–gil

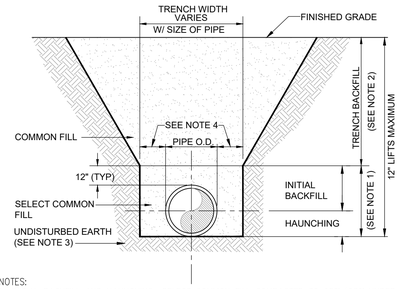


NOTES:
1. INITIAL BACKFILL AND HAUNCHING: SELECT COMMON FILL COMPACTED TO 95% (98% UNDER PAVEMENT) OF THE MAXIMUM DENSITY AS PER AASHTO T-180.
2. TRENCH BACKFILL: COMMON FILL COMPACTED TO 95% (98% UNDER PAVEMENT) OF THE MAXIMUM DENSITY AS PER AASHTO T-180.
3. PIPE BEDDING SHALL BE COMPACTED TO 95% (MIN) OF THE MODIFIED PROCTOR MAXIMUM DRY DENSITY. BEDDING ROCK CAN BE USED FOR BEDDING IF SUBGRADE SOILS ARE TOO WET TO COMPACT, OR AS DIRECTED BY THE ENGINEER.
4. 15" MAX. (12" MIN.) FOR PIPE DIAMETER LESS THAN 24" AND 24" MAX (12" MIN) FOR PIPE DIAMETER 24" AND LARGER.
5. WATER SHALL NOT BE PERMITTED IN THE TRENCH DURING CONSTRUCTION.
6. ALL PIPE TO BE INSTALLED WITH BELL FACING UPSTREAM TO THE DIRECTION OF THE FLOW.
7. FINAL RESTORATION IN IMPROVED AREAS SHALL BE IN COMPLIANCE WITH ALL APPLICABLE REGULATIONS OF GOVERNING AGENCIES.

## 1 TRENCH DETAIL
N.T.S.

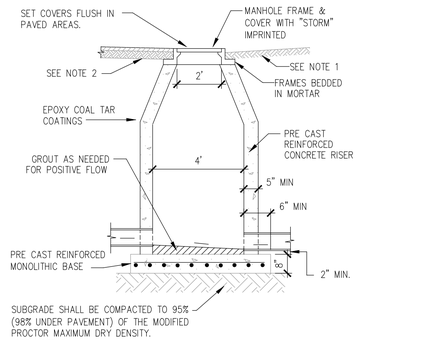


**NOTE:**
1. IN UNPAVED AREAS TOP OF FRAME SHALL BE 2" ABOVE FINISHED GRADE
2. ALL INPAVEMENT STRUCTURES MUST CONFORM TO H20 LOADING STANDARDS
3. 12 INCHES OF STONE BEDDING (FDOT #57 STONE, NON-CALCAREOUS) CAN BE USED FOR BEDDING IF SUBGRADE SOILS ARE TOO WET TO COMPACT.

## 2 MANHOLE
N.T.S.

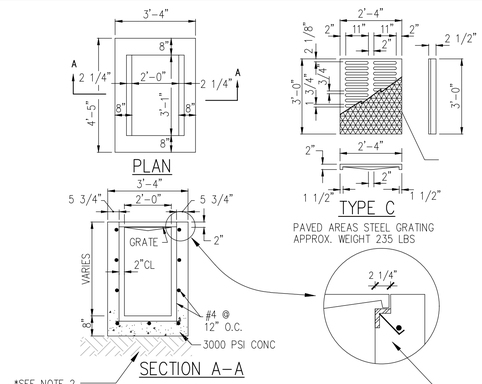


ALL STRUCTURES IN PAVEMENT AREAS SHALL CONFORM TO H20 LOADING STANDARDS.
FOR REBAR LAYOUT, REFER TO FDOT INDEX 232.

*NOTES:
1. FOR ALL USES, USE STEEL GRATE.
2. SUBGRADE SHALL BE COMPACTED TO 95% (98% UNDER PAVEMENT) OF THE MODIFIED PROCTOR MAXIMUM DRY DENSITY.

## 3 TYPE "C" INLET
N.T.S.

*SEE NOTE 1

STORM SEWER PIPE LENGTHS NOTED IN THE DRAWINGS REFLECT ONLY THE PIPE ITSELF. WHERE A MITERED END SECTION IS INSTALLED ON SAID PIPE, ITS ADDITIONAL PIPE LENGTH SHALL BE INCLUDED IN THE COST OF THE MITERED END SECTION.

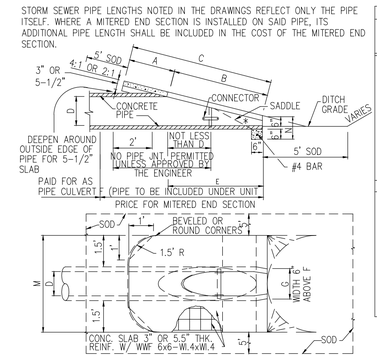


| | DIMENSIONS AND QUANTITIES | | | | | | | | | | |
|---|---|---|---|---|---|---|---|---|---|---|---|
| | D | A | B | C | E | F | G | M SINGLE PIPE | M DOUBLE PIPE | M TRIPLE PIPE | M QUAD. PIPE |
| 2:1 SLOPE | 15" | 1.92' | 2.18' | 4.10' | 2.06' | 5' | 1.22' | 4.63' | 7.21' | 9.79' | 12.37' |
| | 18" | 1.97' | 2.74' | 4.71' | 2.56' | 6' | 1.41' | 4.92' | 7.75' | 10.58' | 13.42' |
| | 24" | 2.06' | 3.85' | 5.91' | 3.56' | 7' | 1.73' | 5.50' | 8.92' | 12.33' | 15.75' |
| | 30" | 2.15' | 4.95' | 7.10' | 4.56' | 8' | 2.00' | 6.08' | 10.33' | 14.58' | 18.83' |
| | 36" | 2.25' | 6.08' | 8.33' | 5.56' | 9' | 2.24' | 6.67' | 11.75' | 16.83' | 21.92' |
| | 42" | 2.34' | 7.21' | 9.55' | 6.56' | 10' | 2.45' | 7.25' | 13.25' | 19.25' | 25.25' |
| | 48" | 2.43' | 8.33' | 10.76' | 7.56' | 11' | 2.65' | 7.83' | 14.58' | 21.33' | 28.08' |
| | 54" | 2.52' | 9.44' | 11.98' | 8.56' | 12' | 2.83' | 8.42' | 16.08' | 23.75' | 31.42' |
| | 60" | 2.62' | 10.56' | 13.18' | 9.56' | 14' | 3.00' | 9.00' | 17.50' | 26.00' | 34.50' |
| | 66" | 2.71' | 11.68' | 14.39' | 10.56' | 15' | 3.18' | 9.58' | 18.75' | 27.92' | 37.08' |
| | 72" | 2.80' | 12.80' | 15.60' | 11.56' | 16' | 3.30' | 10.16' | 20.16' | 30.16' | 40.16' |
| 4:1 SLOPE | 15" | 2.27' | 4.09' | 6.36' | 4.03' | 8' | 1.22' | 4.63' | 7.21' | 9.79' | 12.37' |
| | 18" | 2.36' | 5.12' | 7.48' | 5.03' | 9' | 1.41' | 4.92' | 7.75' | 10.58' | 13.42' |
| | 24" | 2.53' | 7.18' | 9.71' | 7.03' | 11' | 1.73' | 5.50' | 8.92' | 12.33' | 15.75' |
| | 30" | 2.70' | 9.25' | 11.95' | 9.03' | 13' | 2.00' | 6.08' | 10.33' | 14.58' | 18.83' |
| | 36" | 2.87' | 11.31' | 14.18' | 11.03' | 15' | 2.24' | 6.67' | 11.75' | 16.83' | 21.92' |
| | 42" | 3.05' | 13.37' | 16.42' | 13.03' | 17' | 2.45' | 7.25' | 13.25' | 19.25' | 25.25' |
| | 48" | 3.22' | 15.43' | 18.65' | 15.03' | 19' | 2.65' | 7.83' | 14.58' | 21.33' | 28.08' |
| | 54" | 3.39' | 17.49' | 20.88' | 17.03' | 21' | 2.83' | 8.42' | 16.08' | 23.75' | 31.42' |
| | 60" | 3.56' | 19.55' | 23.11' | 19.03' | 23' | 3.00' | 9.00' | 17.50' | 26.00' | 34.50' |
| | 66" | 3.73' | 21.62' | 25.35' | 21.03' | 25' | 3.18' | 9.58' | 18.75' | 27.92' | 37.08' |
| | 72" | 3.91' | 22.68' | 26.59' | 23.03' | 27' | 3.30' | 10.16' | 20.16' | 30.16' | 40.16' |

* SLOPE- 4:1 MITER - TO ℄ PIPE FOR PIPES 18" AND SMALLER

## 4 MITERED END SECTION (RCP)
FDOT STD. INDEX 272 N.T.S.

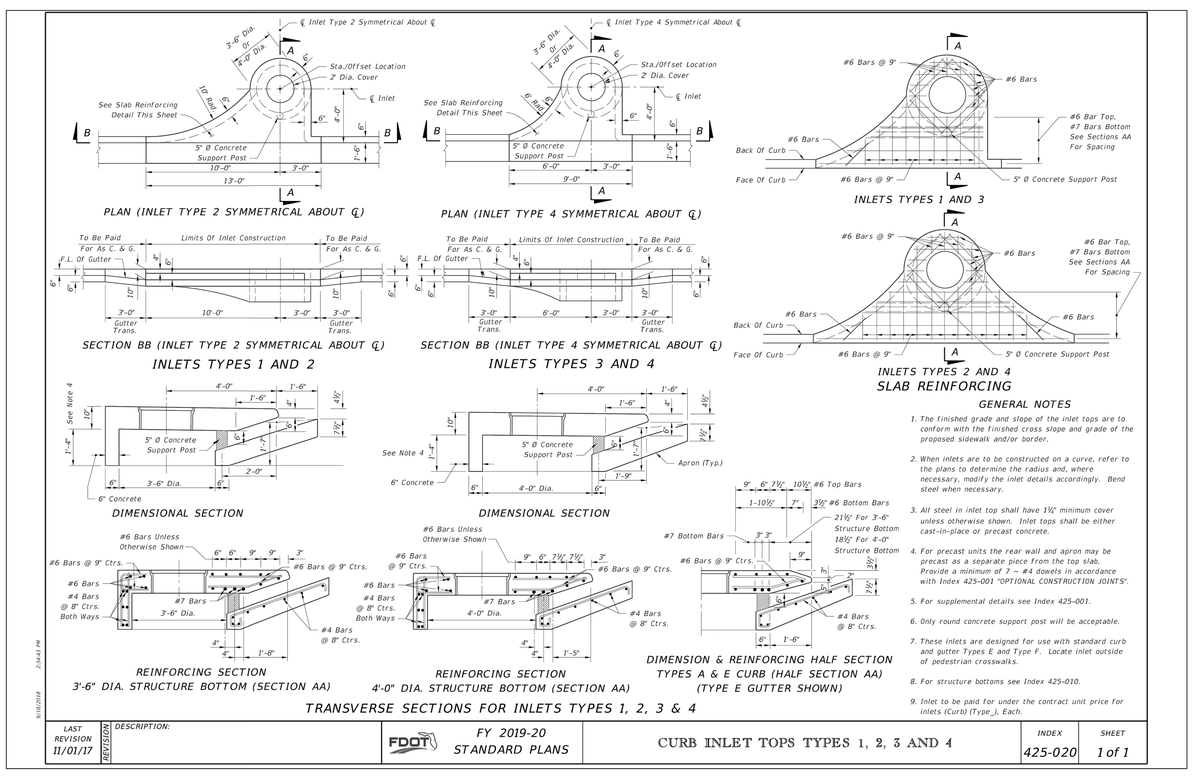


GENERAL NOTES
1. The finished grade and slope of the inlet tops are to conform with the finished cross slope and grade of the proposed sidewalk and/or border.
2. When inlets are to be constructed on a curve, refer to the plans to determine the radius and, where necessary, modify the inlet details accordingly. Bend steel when necessary.
3. All steel in inlet top shall have 1½" minimum cover unless otherwise shown. Inlet tops shall be either cast-in-place or precast concrete.
4. For precast units the rear wall and apron may be precast as a separate piece from the top slab. Provide a minimum of 7 - #4 dowels in accordance with Index 425-001 "OPTIONAL CONSTRUCTION JOINTS".
5. For supplemental details see Index 425-001.
6. Only round concrete support post will be acceptable.
7. These inlets are designed for use with standard curb and gutter Types E and Type F. Locate inlet outside of pedestrian crosswalks.
8. For structure bottoms see Index 425-010.
9. Inlet to be paid for under the contract unit price for inlets (Curb) (Type_), Each.

| LAST REVISION | REVISION | DESCRIPTION: | FDOT FY 2019-20 STANDARD PLANS | CURB INLET TOPS TYPES 1, 2, 3 AND 4 | INDEX | SHEET |
|---|---|---|---|---|---|---|
| 11/01/17 | | | | | 425-020 | 1 of 1 |

## 5 TYPE 1, 2, 3, AND 4 INLETS
N.T.S.

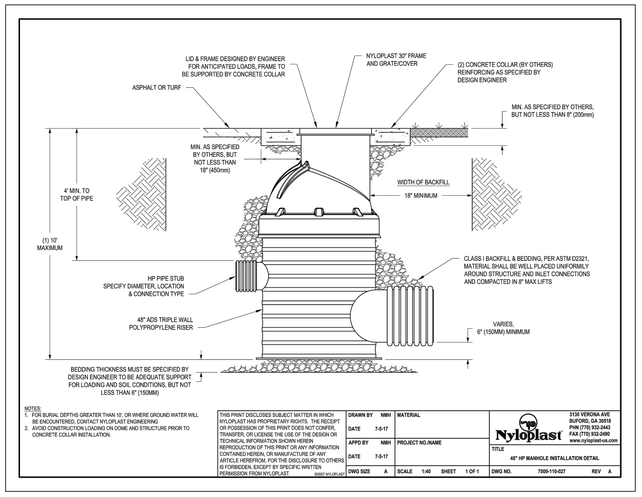


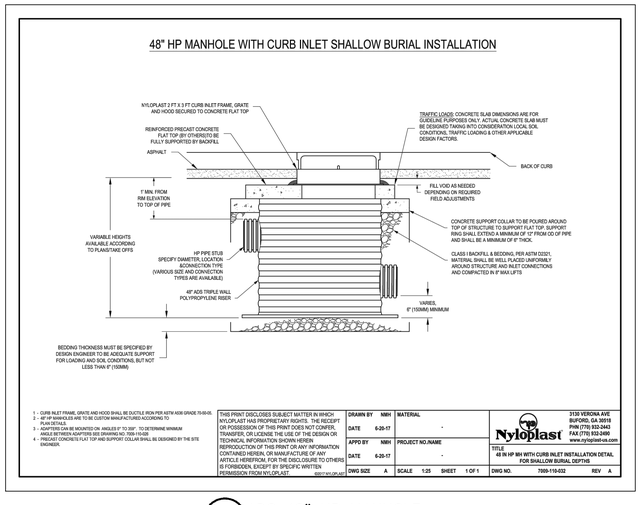


## 6 ADS 48" HP MANHOLE

Call 48 hours before you dig
It's the Law!
1-800-432-4770
Sunshine State One Call of Florida, Inc.

**SHEET 17 OF 22**

| REV. | DATE | BY |
|---|---|---|
| A | 09/17/19 | SCS |
| A | 08/27/19 | SCS |

A CITY OF APOPKA COMMENTS DATED 09/17/19
A CITY OF APOPKA COMMENTS DATED 08/27/19

DESCRIPTION


CIVIL ENGINEERING | LAND PLANNING
APPIAN ENGINEERING LLC.
APPIANFL.COM • 407.960.5868
2221 Lee Road, Suite 27, Winter Park, Florida 32789
STATE OF FLORIDA CERTIFICATE OF AUTHORIZATION NO. 32574


DRAINAGE DETAILS

CENTRAL FLORIDA PREPARATORY SCHOOL
CITY OF APOPKA, FLORIDA

| DRAWN: | DESIGNED: | CHECKED: | DATE: |
|---|---|---|---|
| S. SIERRA-GIL | L. CLASSON | L. CLASSON | 6/26/2019 |

| SCALE | PROJECT | SHEET |
|---|---|---|
| N.T.S. | MMI-006 | C9.0 |

9/19/19


P:_project drawings\mmi-006 central fl preparatory school\Drawings\cad civil3d\Layouts\04 final development plan\DRAINAGE DETAILS.dwg Modified:8/9/2019 By:ssierragil Plotted By:sofia sierra-gil

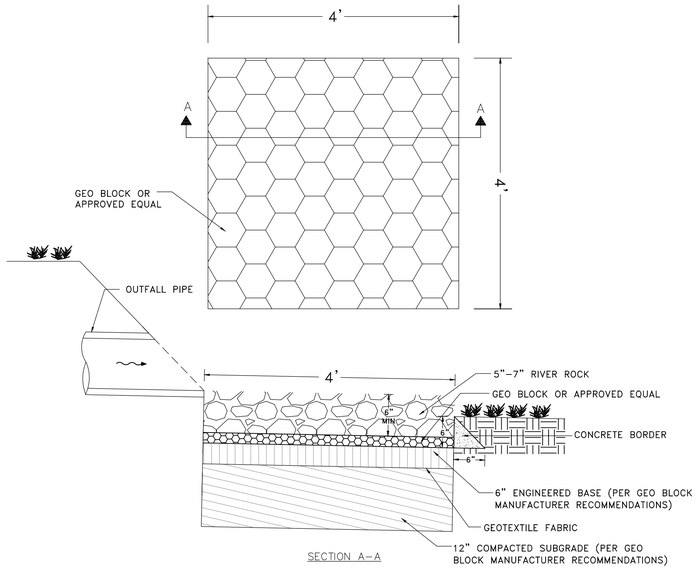


7 ENERGY DISSIPATER DETAIL
N.T.S.

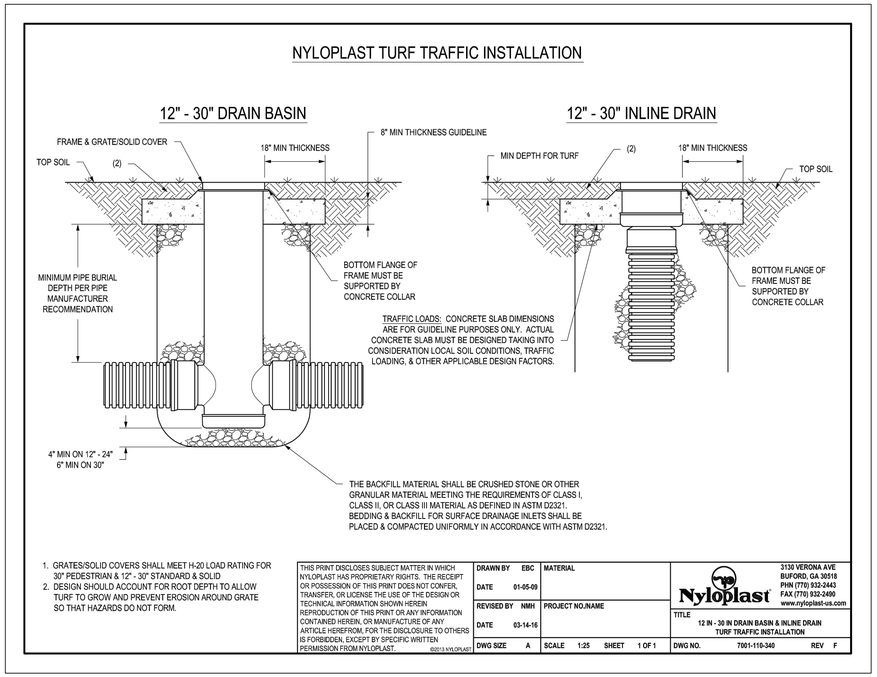


8 CONCRETE COLLAR
N.T.S.

SHEET 18 OF 22

| REV. | DATE | DESCRIPTION | BY |
|---|---|---|---|
| A | 09/17/19 | CITY OF APOPKA COMMENTS DATED 09/17/19 | SCS |
| A | 08/27/19 | CITY OF APOPKA COMMENTS DATED 08/27/19 | SCS |


CIVIL ENGINEERING | LAND PLANNING
APPIAN ENGINEERING LLC.
APPIANFL.COM • 407.960.5868
2221 Lake Rose, Suite 27, Winter Park, Florida 32789
STATE OF FLORIDA CERTIFICATE OF AUTHORIZATION NO. 32574


DRAINAGE DETAILS

CENTRAL FLORIDA PREPARATORY SCHOOL
CITY OF APOPKA, FLORIDA

| | |
|---|---|
| DRAWN: S. SIERRA-GIL | SCALE N.T.S. |
| DESIGNED: L. CLASSON | PROJECT MMI-006 |
| CHECKED: L. CLASSON | SHEET C8.1 |
| DATE: 6/26/2019 | |

9/19/19


P:_project drawings\mmi-006 central fl preparatory school\Drawings\cad civil3d\Layouts\04 final development plan\DRAINAGE DETAILS.dwg Modified:8/9/2019 By:ssierragil Plotted By:sofia sierra-gil

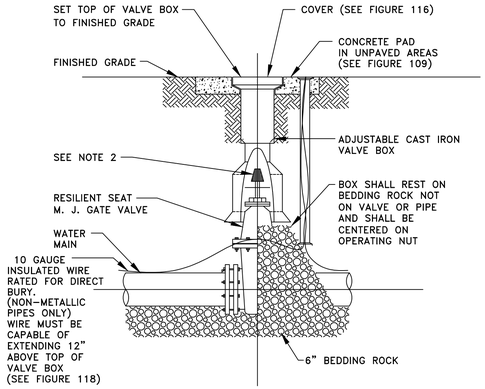


NOTES:

1. PVC EXTENSIONS MAY BE USED ON VALVE BOX INSTALLATION.
2. THE ACTUATING NUT FOR DEEPER VALVES SHALL BE EXTENDED TO WITHIN A 3 FEET BELOW FINISHED GRADE.

## GATE VALVE AND BOX DETAIL

| CITY OF APOPKA DESIGN ENGINEERING DIVISION | JANUARY 2014 | FIG. 400 |
|---|---|---|

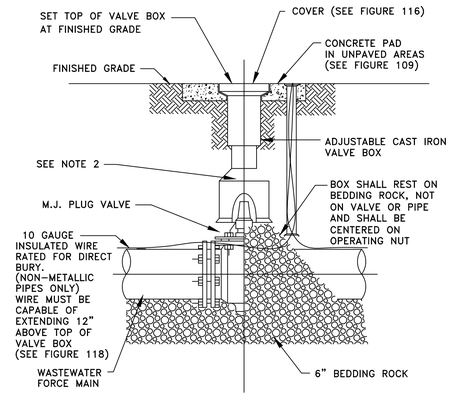


NOTES:

1. PVC EXTENSIONS MAY BE USED ON VALVE BOX INSTALLATION.
2. THE ACTUATING NUT FOR DEEPER VALVES SHALL BE EXTENDED TO WITHIN 3 FEET BELOW FINISHED GRADE.

## PLUG VALVE AND BOX DETAIL

| CITY OF APOPKA DESIGN ENGINEERING DIVISION | JANUARY 2014 | FIG. 400 A |
|---|---|---|

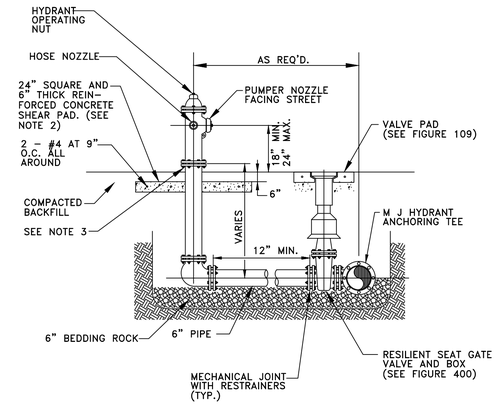


NOTES:

1. FIRE HYDRANT SHALL BE SUPPLIED WITHOUT A WEEP HOLE, OR WITH A PERMANENTLY PLUGGED WEEP HOLE.
2. THE SHEAR PAD SHALL BE RECESSED SIX (6) INCHES BELOW THE FINISHED GRADE AND THE RECESSED SECTION SODDED.
3. CLEARANCE BETWEEN BOTTOM OF BOLTS AND TOP OF SHEAR PAD SHALL BE A TWELVE (12) INCH MINIMUM.
4. FIRE HYDRANTS SHALL BE IDENTIFIED IN ACCORDANCE WITH THE CITY OF APOPKA UTILITIES DESIGN CONSTRUCTION STANDARDS MANUAL.

## FIRE HYDRANT ASSEMBLY DETAIL

| CITY OF APOPKA DESIGN ENGINEERING DIVISION | JANUARY 2014 | FIG. 402 |
|---|---|---|

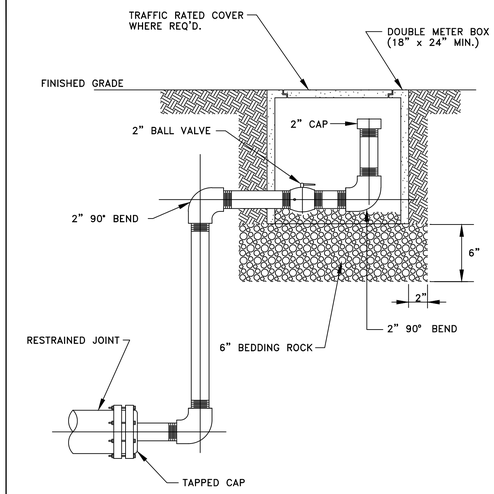


NOTES:

1. ALL 2 INCH PIPE AND FITTINGS SHALL BE SCHEDULE 40 GALVANIZED STEEL OR BRASS WITH THREADED (NPT) JOINTS. USE TEFLON TAPE ON JOINTS.
2. COLOR SHALL BE APPROPRIATE FOR USE.

## BLOWOFF VALVE DETAIL

| CITY OF APOPKA DESIGN ENGINEERING DIVISION | JANUARY 2014 | FIG. 403 |
|---|---|---|

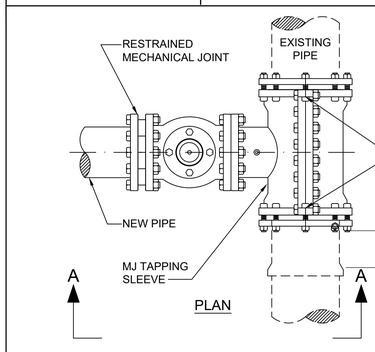


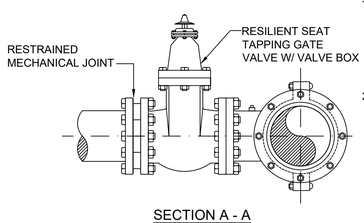


SECTION A - A

NOTES

1. SIZE ON SIZE WET TAPS WILL CALL FOR FULL ENCIRCLEMENT STAINLESS STEEL MJ TAPPING SLEEVE; MUELLER H-304, OR EQUAL.
2. ALL NEWLY INSTALLED TAPPING SLEEVES & TAPPING VALVES SHALL BE PNEUMATICALLY TESTED AT A TEST PRESSURE OF 150PSI FOR A PERIOD OF THIRTY MINUTES.

## WATER AND RECLAIMED WATER MAINS WET TAP TIE-IN DETAIL

| CITY OF APOPKA DESIGN ENGINEERING DIVISION | JANUARY 2014 | FIG. 406 |
|---|---|---|

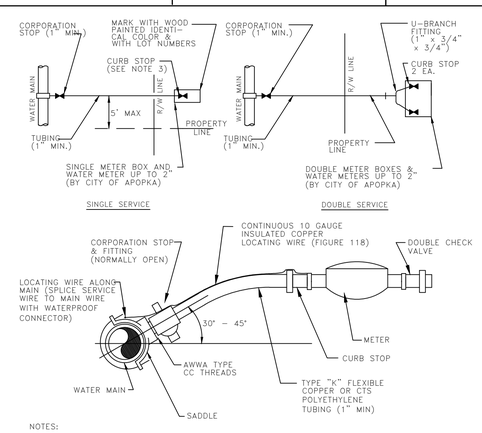


NOTES:

1. ALL FITTINGS SHALL BE BRASS WITH COMPRESSION/PACK JOINT TYPE CONNECTIONS.
2. NO SERVICE LINE SHALL TERMINATE UNDER A DRIVEWAY.
3. EACH SERVICE SHALL TERMINATE AT A CURB STOP(S) WHICH SHALL BE BURIED APPROXIMATELY 3" BELOW FINAL GRADE AND SHALL BE CLEARLY MARKED WITH A 2" x 2" x 18" STAKE WITH THE TOP PAINTED BLUE FOR POTABLE WATER AND PURPLE FOR RECLAIMED WATER, AND MARKED WITH THE NUMBER OF THE LOT(S) TO BE SERVED.
4. RECLAIMED WATER SERVICES SHALL USE PURPLE COLORED CTS POLYETHYLENE TUBING.
5. POTABLE WATER SERVICES SHALL USE BLUE COLORED CTS POLYETHYLENE TUBING.
6. ALL SERVICE UNDER EXISTING OR PROPOSED PAVEMENT SHALL BE INSTALLED IN A MINIMUM 2" PVC SLEEVE.

## WATER SERVICE CONNECTION DETAIL

| CITY OF APOPKA DESIGN ENGINEERING DIVISION | JANUARY 2014 | FIG. 405 |
|---|---|---|

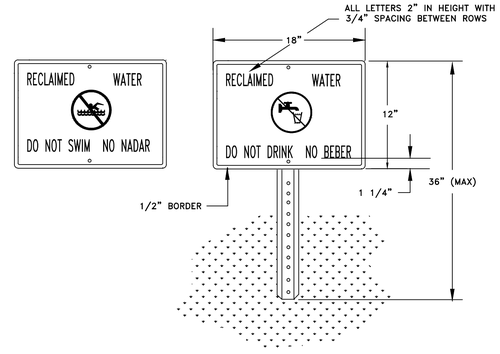


NOTES:

1. HEIGHT OF SIGN WILL DEPEND ON LOCATION AND SURROUNDING LANDSCAPE PLANT TYPES. IN ALL CASES, THE SIGN SHALL BE VISIBLE TO THE PUBLIC.
2. BACKGROUND SHALL BE WHITE. LETTERS AND FIGURES SHALL BE BLACK. PROHIBITIVE SYMBOL SHALL BE RED.
3. ENGINEERING GRADE REFLECTIVE MATERIALS SHALL BE USED.
4. POST SHALL BE U CHANNEL 12 FT. 2 LB. HOT ROLLED HIGH TENSILE RAIL OR BILLET STEEL, HOT DIP GALVANIZED PER ASTM A-123.
5. MOUNTING HARDWARE SHALL BE STAINLESS STEEL.
6. SIGNS SHALL BE PLACED BY THE CONTRACTOR IN ACCORDANCE WITH THE CITY APPROVED ENGINEERING PLANS AND/OR AS APPROVED BY PUBLIC SERVICES DEPARTMENT.

## RECLAIMED WATER ADVISORY SIGN

| CITY OF APOPKA DESIGN ENGINEERING DIVISION | JANUARY 2014 | FIG. 115 |
|---|---|---|

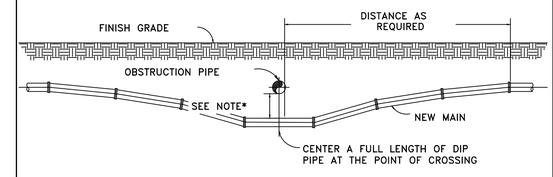


NOTES:

1. 18" MINIMUM CLEARANCE FOR WATER, SEWER AND RECLAIMED WATER MAIN CROSSINGS
2. 12" MINIMUM CLEARANCE REQUIRED FOR OTHER TYPE UTILITY CROSSINGS.
3. SEE ENCASEMENT DETAIL IF MINIMUM CLEARANCE CANNOT BE OBTAINED.

* CONSTRUCT UNIFORM PIPE DEFLECTION NOT TO EXCEED 75% OF MANUFACTURER RECOMMENDED MAXIMUM DEFLECTION PER PIPE JOINT

## UTILITY CROSSING PIPE DEFLECTION DETAIL

| CITY OF APOPKA DESIGN ENGINEERING DIVISION | JANUARY 2014 | FIG. 117 |
|---|---|---|

Call 48 hours before you dig
It's the Law! 1-800-432-4770
Sunshine State One Call of Florida, Inc.

**SHEET 19 OF 22**

| REV. | DATE | DESCRIPTION | BY |
|---|---|---|---|
| 1 | 09/17/19 | CITY OF APOPKA COMMENTS DATED 09/17/19 | SCS |
| 2 | 08/27/19 | CITY OF APOPKA COMMENTS DATED 08/27/19 | SCS |

CIVIL ENGINEERING | LAND PLANNING
APPIAN ENGINEERING LLC.
APPIANFL.COM • 407.960.5868
2221 Lee Road, Suite 27, Winter Park, Florida 32789
STATE OF FLORIDA CERTIFICATE OF AUTHORIZATION NO. 32574

UTILITY DETAILS
CENTRAL FLORIDA PREPARATORY SCHOOL
CITY OF APOPKA, FLORIDA

| DRAWN: S. SIERRA-GIL | DESIGNED: L. CLASSON | CHECKED: L. CLASSON | DATE: 8/30/2019 |
|---|---|---|---|
| SCALE N.T.S. | PROJECT MMI-006 | SHEET C9.0 | |

9/19/19

P:_project drawings\mmi-006 central fl preparatory school\Drawings\cad civil3d\Layouts\04 final development plan\UTILITY DETAILS.dwg Modified:9/5/2019 By:gcorral Plotted By:sofia sierra-gil

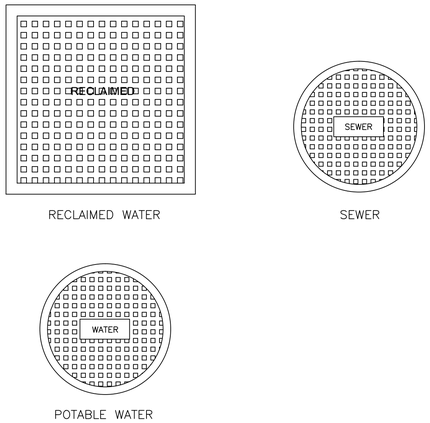


TYPICAL VALVE BOX COVER DETAILS

| CITY OF APOPKA DESIGN ENGINEERING DIVISION | JANUARY 2014 | FIG. 116 |
|---|---|---|

| MINIMUM LENGTH (FT) TO BE RESTRAINED ON EACH SIDE OF FITTING(S). * | PIPE SIZE | | | | | | | | | | |
|---|---|---|---|---|---|---|---|---|---|---|---|
| | 6" | 8" | 10" | 12" | 16" | 18" | 20" | 24" | 30" | 36" | 48" |
| 90° BEND | 33 | 43 | 51 | 60 | | | | | | | |
| 45° BEND | 14 | 18 | 22 | 25 | | | | | | | |
| 22-1/2° BEND | 7 | 9 | 11 | 12 | | | | | | | |
| 11-1/4° BEND | 4 | 5 | 6 | 6 | | | | | | | |
| TEE** | 1 | 7 | 24 | 44 | | | | | | | |
| REDUCER (ONE SIZE SMALLER) | | 41 | 39 | 40 | | | | | | | |
| DEAD END | 74 | 96 | 115 | 136 | | | | | | | |

* ONLY RESTRAIN BRANCH PIPE FOR TEES. ONLY RESTRAIN LARGER PIPE FOR REDUCERS
** LENGTH ALONG RUN ASSUMED TO BE 18'

NOTES:

1. FITTINGS SHALL BE DUCTILE IRON RESTRAINED JOINT TYPE. FM FITTINGS TO BE LINED WITH PROTECTO 401.
2. INSTALL FULL LENGTHS OF PIPE WITH TOTAL LENGTH CONTAINING ONLY RESTRAINED JOINTS EQUAL TO OR GREATER THAN LENGTH SHOWN IN TABLE.
3. WHERE TWO OR MORE FITTINGS ARE TOGETHER, USE FITTING WHICH YIELDS GREATEST LENGTH OF RESTRAINED PIPE.
4. IN LINE VALVES AND THROUGH RUN OF TEES OUTSIDE LIMITS OF RESTRAINED JOINTS FROM OTHER FITTINGS NEED NOT BE RESTRAINED UNLESS OTHERWISE INDICATED.
5. LENGTHS SHOWN IN THE TABLE HAVE BEEN CALCULATED IN ACCORDANCE WITH THE PROCEDURE OUTLINED IN "THRUST RESTRAINT DESIGN FOR DUCTILE IRON PIPE" AS PUBLISHED BY DIPRA, FOR PVC WITH THE FOLLOWING ASSUMPTIONS:
   TYPE OF PIPE: PVC
   WORKING PRESSURE: 150 P.S.I.**
   SOIL DESIGNATION: SM(SAND SILT)
   LAYING CONDITIONS: 3
   ** FM = 100 P.S.I. / WM OR RWM = 150 P.S.I.
6. FOR PIPE ENCASED IN POLYETHYLENE INCREASE THE GIVEN VALUE BY A FACTOR OF 1.5.
7. VALUES NOT LISTED IN THE TABLE TO BE COMPLETED BY THE ENGINEER.

RESTRAINED PIPE TABLE (PVC)

| CITY OF APOPKA DESIGN ENGINEERING DIVISION | JANUARY 2014 | FIG. 105 |
|---|---|---|

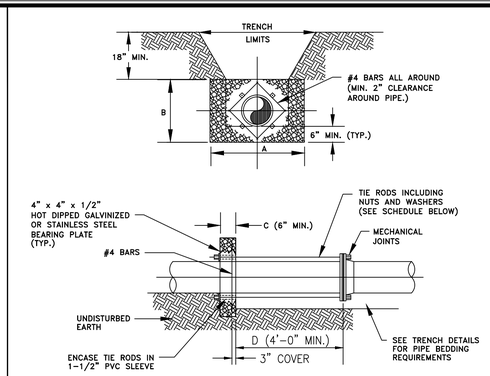


NOTES:

1. ADDITIONAL REINFORCEMENTS SHALL BE AS SPECIFIED BY THE ENGINEER.
2. MINIMUM COMPRESSIVE STRENGTH FOR CONCRETE SHALL BE 2500 P.S.I.
3. BEDDING, BACKFILL, AND COMPACTION SHALL BE AS SPECIFIED ELSEWHERE IN THE STANDARD DRAWINGS.
4. ALL FORM BOARDS SHALL BE REMOVED PRIOR TO BACKFILL.
5. NO ALLOWANCE SHALL BE MADE FOR FRICTION BETWEEN THE PIPE WALL AND THE THRUST COLLAR.
6. DESIGN PRESSURE: 150 P.S.I.

| SCHEDULE OF DIMENSIONS AND MATERIALS * | | | | | | |
|---|---|---|---|---|---|---|
| PIPE SIZE (INCHES) | DIMENSIONS (FT.) | | | | TIE RODS REQ'D | |
| | A | B | C | D | DIA. | NO. |
| 6 | 2.0 | 2.0 | 1.0 | | 3/4 | 2 |
| 8 | 2.5 | 2.5 | 1.0 | | 3/4 | 2 |
| 10 | 3.5 | 3.0 | 1.0 | | 3/4 | 4 |
| 12 | 5.0 | 3.0 | 1.0 | | 3/4 | 4 |
| 16 | 6.0 | 4.0 | 1.5 | | 3/4 | 4 |
| 20 | 8.0 | 5.0 | 1.5 | | 3/4 | 6 |
| 24 | 9.0 | 6.0 | 1.5 | | 3/4 | 8 |
| | | | | | | |
| | | | | | | |
| | | | | | | |
| | | | | | | |
| NOTE: THRUST BLOCK AREAS TO BE COMPUTED ON BASIS OF 2,000 LBS. PER SQ. FT. SOIL RESTRAINT BEARING. (1,500 MIN) SEE NOTE 5 * TO BE COMPLETED BY ENGINEER. | | | | | | |

WATER MAIN THRUST COLLAR DETAIL

| CITY OF APOPKA DESIGN ENGINEERING DIVISION | JANUARY 2014 | FIG. 107 |
|---|---|---|

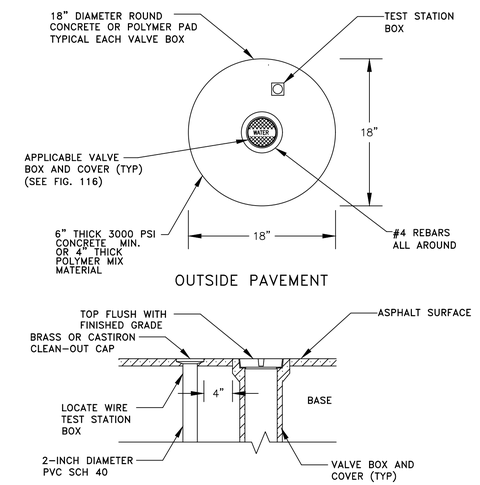


VALVE IDENTIFICATION TAG
TO BE INSTALLED BY CITY
& PAID FOR BY DEVELOPER

VALVE BOX

| CITY OF APOPKA DESIGN ENGINEERING DIVISION | JANUARY 2014 | FIG. 109 |
|---|---|---|

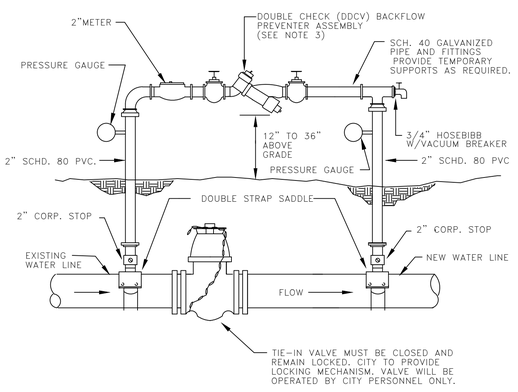


NOTE:

1. THE CONTRACTOR SHALL BE RESPONSIBLE FOR ALL MATERIALS, ASSEMBLY, AND THE INSTALLATION OF THE DEVICE.
2. SEE FIGURE 504C FOR PROCEDURES.
3. DDCV IS MINIMUM PROTECTION REQUIRED. A RPZ DEVICE MAY BE REQUIRED DEPENDING ON PROJECT. PROVIDE COPY OF LATEST CERTIFICATION TEST RESULTS.

TEMPORARY JUMPER CONNECTION

| CITY OF APOPKA DESIGN ENGINEERING DIVISION | JANUARY 2014 | FIG. 504 A |
|---|---|---|

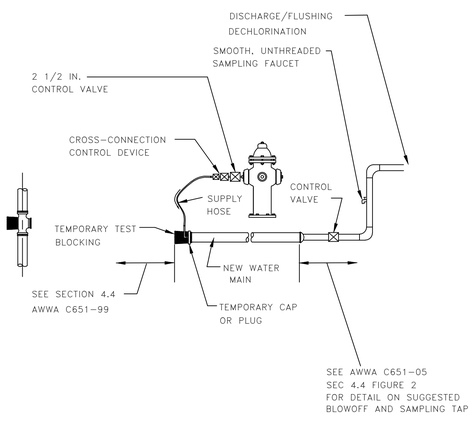


NOTE:

1. SEE FIGURE 504C FOR PROCEDURES.

TEMPORARY JUMPER CONNECTION FROM FIRE HYDRANT

| CITY OF APOPKA DESIGN ENGINEERING DIVISION | JANUARY 2014 | FIG. 504 B |
|---|---|---|

TEMPORARY JUMPER CONNECTION NOTES:

1. A temporary jumper connection is required at all connections between existing active water mains and proposed new water main improvements.
2. Figures 504 A and 504 B to be used for filling any new water main of any size from existing active water mains and for flushing of new mains up to 8 inches in diameter (2.5 FPS minimum velocity) and for pulling bacteriological samples from any new water main of any size. The jumper connection shall be maintained until after filling, flushing testing and disinfection of the new main has been successfully completed and cleared for use from the Florida Department of Environmental Protection (FDEP) and other pertinent agencies have been received. The jumper connection shall also be used to maintain a minimum pressure of 20 psi in the new mains after disinfection and until the FDEP clearence letter is obtained. Thrust blocking and/or restraints shall be provided temporarily, as required. Pipe and fittings used for connecting the new pipe to the existing pipe shall be disinfected prior to installation in accordance with AWWA C651, 2005 edition. The tapping sleeve and the exterior of the main to be tapped shall be disinfected by spraying or swabbing per section II of AWWA C651-05.
3. Flushing of 10 inches in diameter and larger water mains may be done through the tie-in valve under very controlled conditions. The following procedures shall be followed:
   A. The tie-in valves shall be operated and pressure tested in the presence of the City engineer to verify water tightness prior to tie-in. Valves which are not water tight shall be replaced with a new valve installed immediately adjacent to the leaking valve.
   B. The temporary jumper connection shall be constructed as detailed. The jumper connection shall be used to fill the new water main and for providing water for bacteriological sampling of the new main as required by the FDEP permit.
   * Flushing shall not be attempted during peak demand hours of the existing water mains.
   * All downstream valves in the system must be open prior to opening the tie-in valve.
   * Provide for and monitor the pressure in the tie-in point. The pressure in the existing main must not drop below 35 psi.
   * The tie-in valve shall be opened a few turns only, ensuring a pressure drop across the valve is greater than 10 psi.
   C. The tie-in valve shall be locked closed by the City personel until flushing begins.
   D. The tie-in valve shall be opened only for flushing of the new main. The procedure shall be directed by the City and observed by the engineer.
   E. After flushing, the tie-in valve shall be closed and locked in the closed position by the City personel.
4. The contractor shall provide documentation demonstrating that the double check backflow prevention device has been tested and is in good working order at the time of installation.
5. Except as required to flush lines of greater than 8 inches in diameter, the tie-in valve shall remain closed and shall be locked in the closed position by the City. The tie-in valve shall remain locked closed until the new system has been cleared for use by FDEP and all other pertinent agencies.
6. Upon receipt of clearance for use from FDEP and all other pertinent agencies, the contractor shall remove the temporary jumper connection. The corporation stops are to be closed and plugged with 2 inch brass plugs.
7. All installation and maintenance of the temporary jumper connection and associated backflow prevention device, fittings, valve, etc. shall be the responsibility of the contractor.

PROCEDURES FOR TEMPORARY JUMPER CONNECTION

| CITY OF APOPKA DESIGN ENGINEERING DIVISION | JANUARY 2014 | FIG. 504 C |
|---|---|---|

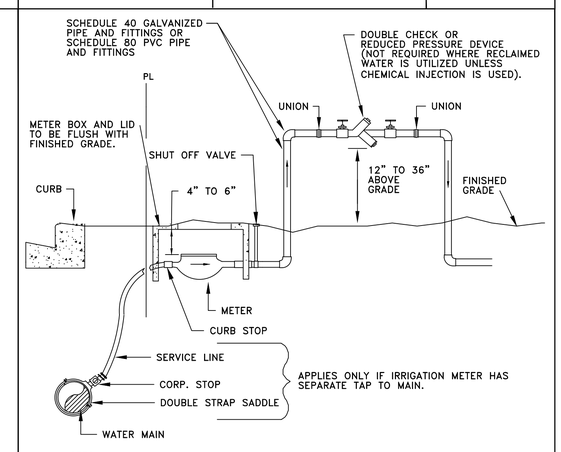


NOTES:

1. A POSITIVE DIELECTRIC CONNECTION SHALL BE MADE BETWEEN ALL GALVANIZED AND BRASS COMPONENTS.
2. METER SHALL BE INSTALLED JUST INSIDE THE ROW LINE OR PROPERTY LINE AND IN NO CASE SHALL IT BE INSTALLED IN THE SIDEWALK OR OTHER PAVED AREAS.
3. DOUBLE CHECK VALVES MAY BE USED AS LONG AS THEIR ARE NO CHEMICALS OR A WELL ON SITE.
4. A PVB DEVICE SHALL BE 12-INCHES MINIMUM ABOVE HIGHEST OUTLET OR SPRAYHEAD
5. ALL BACKFLOW PREVENTION DEVICES ARE TO BE AWWA APPROVED.

IRRIGATION METER AND DOUBLE CHECK VALVE OR REDUCED PRESSURE BACKFLOW PREVENTER

| CITY OF APOPKA DESIGN ENGINEERING DIVISION | JANUARY 2014 | FIG. 502 |
|---|---|---|

Call 48 hours before you dig
It's the Law!
1-800-432-4770
Sunshine State One Call of Florida, Inc.

SHEET 20 OF 22

| REV. | DATE | DESCRIPTION | BY |
|---|---|---|---|
| A | 09/17/19 | CITY OF APOPKA COMMENTS DATED 09/17/19 | SCS |
| A | 08/27/19 | CITY OF APOPKA COMMENTS DATED 08/27/19 | SCS |

CIVIL ENGINEERING | LAND PLANNING
APPIAN ENGINEERING LLC.
APPIANEL.COM • 407.960.5868
2221 Lee Road, Suite 27, Winter Park, Florida 32789
STATE OF FLORIDA CERTIFICATE OF AUTHORIZATION NO. 32574

UTILITY DETAILS
CENTRAL FLORIDA PREPARATORY SCHOOL
CITY OF APOPKA, FLORIDA

| DRAWN: S. SIERRA-GIL | DESIGNED: L. CLASSON | CHECKED: L. CLASSON | DATE: 8/30/2019 |
|---|---|---|---|
| SCALE N.T.S. | PROJECT MMI-006 | SHEET C9.1 | |

9/19/19

P:_project drawings\mmi-006 central fl preparatory school\Drawings\cad civil3d\Layouts\04 final development plan\UTILITY DETAILS.dwg Modified:9/5/2019 By:gcorral Plotted By:sofia sierra-gil

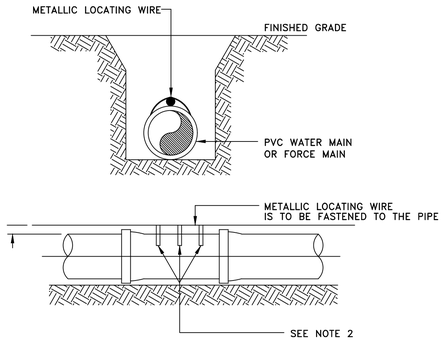


NOTES:

1. PVC PIPE SHALL REQUIRE INSULATED METALLIC LOCATING WIRE (10 AWG-SOLID CCS REINFORCED TRACER WIRE-INSULATED 30 MIL HDPE - 30 VOLT MFG. BY COPPERHEAD INDUSTRIES, LLC OR EQUAL) CAPABLE OF DETECTION BY A CABLE LOCATOR.
2. SHALL BE BURIED DIRECTLY ABOVE THE CENTERLINE OF THE PIPE AND ATTACHED WITH DUCT TAPE OR NYLON STRAPS AT 3 LOCATIONS PER JOINT. LOCATING WIRE SHALL TERMINATE AT THE TEST STATION BOX AS SHOWN IN FIG. 109.
3. BE CAPABLE OF EXTENDING 12" ABOVE TOP OF TEST STATION BOX IN SUCH A MANNER SO AS NOT TO INTERFERE WITH VALVE OPERATION.
4. SPLICES SHOULD BE MADE USING STANDARDS AND PRODUCTS DESIGNED FOR DIRECT BURIAL CONDUCTORS.
5. WIRE INSULATION SHALL BE COLOR CODED FOR THE TYPE OF PIPE BEING INSTALLED.

## PVC PIPE LOCATING WIRE DETAIL

| CITY OF APOPKA DESIGN ENGINEERING DIVISION | JANUARY 2014 | FIG. 118 |
|---|---|---|

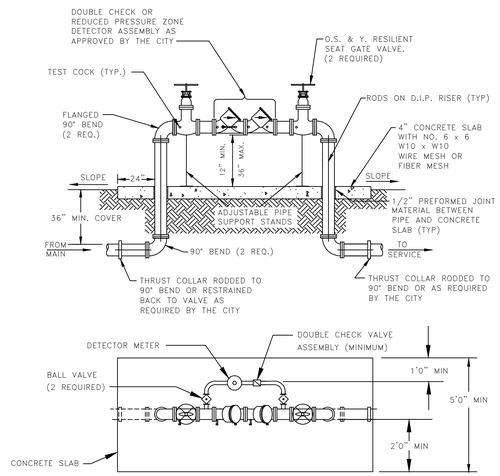


NOTES:
1. BYPASS METER MUST MEET AWWA STANDARD C700 OR C701.
2. METER MUST MEET AWWA STANDARD C707 AND TRANSMITTER MUST BE COMPATIBLE WITH THE CITY'S AMR SYSTEM.
3. ALL PIPE FITTINGS, MATERIALS, LABOR, AND APPURTENANCES SHALL BE SUPPLIED BY THE CONTRACTOR.
4. ALL PIPE AND FITTINGS TWO (2) INCHES AND SMALLER SHALL BE THREADED SCHEDULE 40 GALVANIZED STEEL, OR BRASS.

## ABOVE GROUND DEVICE WITH DETECTOR BY-PASS

2 INCH AND ABOVE ASSEMBLY

| CITY OF APOPKA DESIGN ENGINEERING DIVISION | JANUARY 2014 | FIG. 500 B |
|---|---|---|

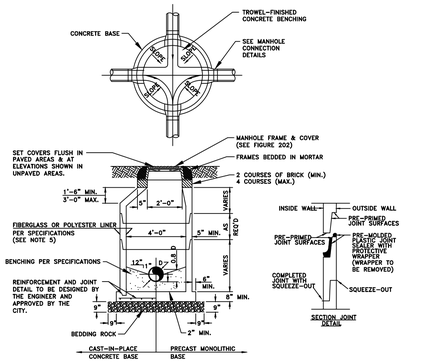


FORCE MAIN MANHOLE LINER*

| THICKNESS (INCHES) | | | | | |
|---|---|---|---|---|---|
| DIAMETER (INCHES) | HEIGHT (FEET) 3-6 | 7-12 | 13-17 | MATERIAL | MANUFACTURER |
| 48 | | | | | |
| 60 | | | | | |
| 72 | | | | | |

* TO BE COMPLETED BY THE ENGINEER

NOTES:

1. MANHOLE SHOWN IS FOR SEWER SIZE 8" THRU 24". SEE SECTION 20.4 OF THE MANUAL FOR MANHOLE DIAMETER FOR SEWERS LARGER THAN 24".
2. DROP CONNECTIONS ARE REQUIRED WHENEVER INVERT OF INFLUENT SEWER IS 24" OR MORE ABOVE THE INVERT OF THE MANHOLE. SEE MANHOLE CONNECTION DETAILS.
3. THE THICKNESS OF THE LINER SHALL BE 3/8" MINIMUM.
4. EACH BENCH WALL SHALL BE A MINIMUM OF 18 INCHES LONG FROM THE WALL OF THE MANHOLE TOWARD THE CENTER.
5. SANITARY SEWER MANHOLES MAY BE REQUIRED TO BE LINED IN ACCORDANCE WITH THE CITY OF APOPKA LIST OF APPROVED MATERIALS AND PRODUCTS AS DIRECTED BY THE CITY.

## TYPICAL MANHOLE

| CITY OF APOPKA DESIGN ENGINEERING DIVISION | JANUARY 2015 | FIG. 200 |
|---|---|---|

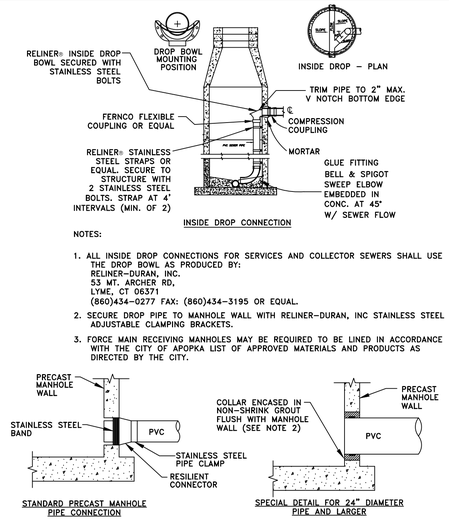


NOTES:

1. ALL INSIDE DROP CONNECTIONS FOR SERVICES AND COLLECTOR SEWERS SHALL USE THE DROP BOWL AS PRODUCED BY: RELINER-DURAN, INC. 53 MT. ARCHER RD, LYME, CT 06371 (860)434-0277 FAX: (860)434-3195 OR EQUAL.
2. SECURE DROP PIPE TO MANHOLE WALL WITH RELINER-DURAN, INC STAINLESS STEEL ADJUSTABLE CLAMPING BRACKETS.
3. FORCE MAIN RECEIVING MANHOLES MAY BE REQUIRED TO BE LINED IN ACCORDANCE WITH THE CITY OF APOPKA LIST OF APPROVED MATERIALS AND PRODUCTS AS DIRECTED BY THE CITY.
4. DROP PIPE AND FITTINGS SHALL BE OF EQUAL SIZE AND MATERIAL AS THE INFLUENT SEWER.
5. THE CITY MAY APPROVE ALTERNATE WATERTIGHT CONNECTION DETAILS FOR CONNECTION OF 24" DIAMETER PIPES AND LARGER.
6. AN INSIDE DROP CONNECTION SHALL BE REQUIRED FOR ALL INFLUENT WHICH HAVE AN INVERT 24" OR MORE ABOVE THE OUTFLOW PIPE INVERT.
7. CONCRETE TO BE MINIMUM OF 3000 PSI.

## MANHOLE CONNECTION DETAILS

| CITY OF APOPKA DESIGN ENGINEERING DIVISION | JANUARY 2015 | FIG. 201 |
|---|---|---|

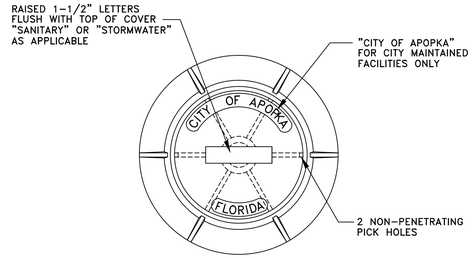


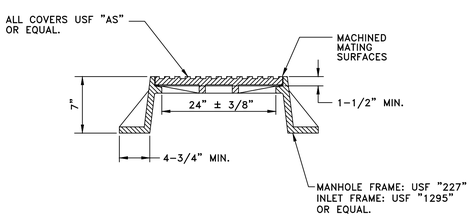


NOTES:

1. MANHOLE FRAME AND COVER ARE TO BE TRAFIC BEARING RATED H-20, CLASS 30 MEETING ASTM A 48.

## STANDARD MANHOLE FRAME AND COVER

| CITY OF APOPKA DESIGN ENGINEERING DIVISION | JANUARY 2014 | FIG. 202 |
|---|---|---|

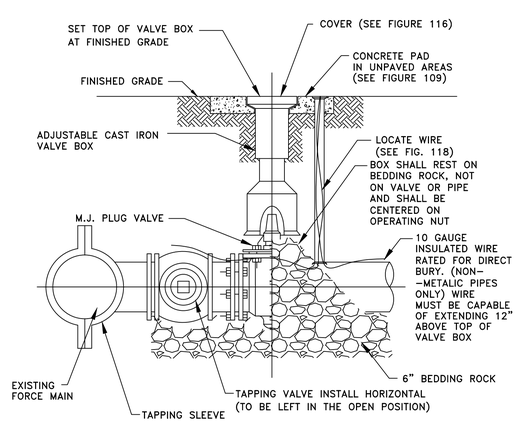


## FORCE MAIN WET TAP TIE-IN DETAIL

| CITY OF APOPKA DESIGN ENGINEERING DIVISION | JANUARY 2014 | FIG. 206 |
|---|---|---|

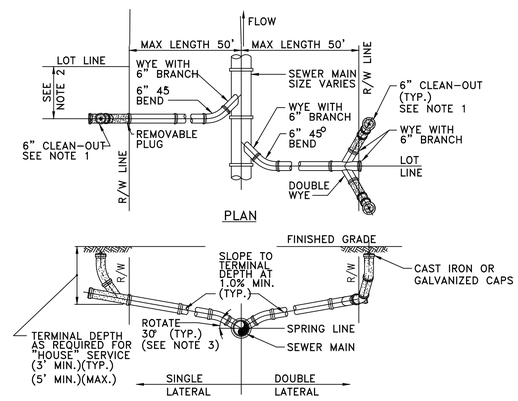


NOTES:

1. CLEAN-OUT (SHOWN SHADED) SHALL BE INSTALLED BY THE BUILDER IN ACCORDANCE WITH STANDARD PLUMBING CODE.
2. LOCATE SINGLE LATERAL AS CLOSE TO LOT LINE AS POSSIBLE.
3. INVERT OF SERVICE LATERAL SHALL NOT ENTER SEWER MAIN BELOW SPRING LINE.
4. RESIDENTIAL SERVICES SHALL BE 4 INCHES & NON-RESIDENTIAL SERVICES SHALL BE 6 INCHES IN DIAMETER AS A MINIMUM.
5. GALVANIZED OR CAST IRON CLEAN-OUT CAP SHALL BE USED ON THE STUBOUT FOR EACH SERVICE.
6. LATERAL SHALL BE MARKED WITH AN "S" STAMPED OR CUT IN THE CURB.

## SERVICE LATERAL DETAIL

| CITY OF APOPKA DESIGN ENGINEERING DIVISION | JANUARY 2014 | FIG. 204 |
|---|---|---|

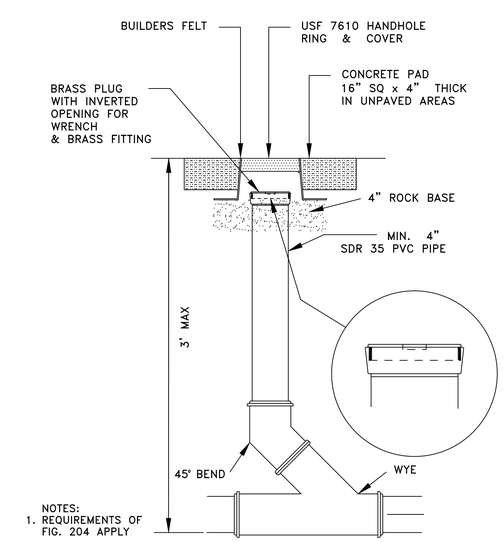


NOTES:
1. REQUIREMENTS OF FIG. 204 APPLY

## SANITARY SEWER SERVICE TRAFFIC RATED CLEAN-OUT DETAIL

NTS

| CITY OF APOPKA DESIGN ENGINEERING DIVISION | JANUARY 2014 | FIG. 205 |
|---|---|---|

Call 48 hours before you dig
It's the Law!
1-800-432-4770
Sunshine State One Call of Florida, Inc.

**SHEET 21 OF 22**

| REV. | DATE | BY |
|---|---|---|
| 1 | 09/17/19 | CITY OF APOPKA COMMENTS DATED 09/17/19 | SCS |
| 2 | 08/27/19 | CITY OF APOPKA COMMENTS DATED 08/27/19 | SCS |

DESCRIPTION

CIVIL ENGINEERING | LAND PLANNING
APPIAN ENGINEERING LLC.
APPIANEL.COM - 407.960.5868
2221 LAKE ROAD, SUITE 27, WINTER PARK, FLORIDA 32789
STATE OF FLORIDA CERTIFICATE OF AUTHORIZATION NO. 32574

UTILITY DETAILS

CENTRAL FLORIDA PREPARATORY SCHOOL
CITY OF APOPKA, FLORIDA

DRAWN: S. SIERRA-GIL
DESIGNED: L. CLASSON
CHECKED: L. CLASSON
DATE: 8/30/2019
SCALE: N.T.S.
PROJECT: MMI-006
SHEET: C9.2

9/19/19

P:_project drawings\mmi-006 central fl preparatory school\Drawings\cad civil3d\Layouts\04 final development plan\UTILITY DETAILS.dwg Modified:9/5/2019 By:sofia sierra-gil 9/5/2019 By:gcorral Plotted By:sofia sierra-gil

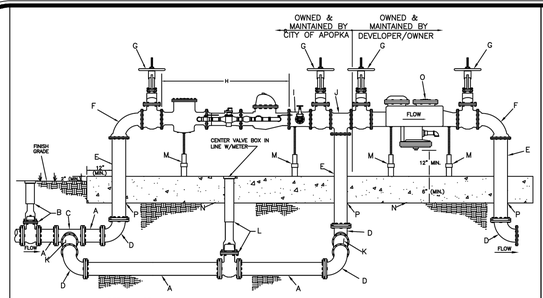


MATERIAL LIST

- A DUCTILE IRON PIPE (VARIOUS LENGTHS)
- B M.J. GATE VALVE W/VALVE BOX (SLIDE STYLE) MEGALUG JOINT RESTRAINTS
- C M.J. TEE MEGALUG JOINT RESTRAINTS
- D M.J. ELL MEGALUG JOINT RESTRAINTS
- E DUCTILE IRON FLANGED PIPE
- F FLANGED ELL (LONG RADIUS)
- G FLANGED O.S. & Y VALVE
- H DUAL RANGE METER
- I (SIZE") x 4" FLANGED TEE 4" x 2" TAPPED FLANGE 2" x 2 1/2" BRASS NIPPLE 2" GATE SCREW VALVE 2" GALVANIZED PLUG
- J FLANGED TEE
- K (SIZE") x 30" D.I. PIPE STUB M.J. GATE VALVE W/VALVE BOX (SLIDE STYLE) & VALVE NUT LOCKING CAP MEGALUG JOINT RESTRAINTS (VALVE NUT LOCKING CAP PROVIDED BY OUC)
- M ADJUSTABLE BRACE (AS NEEDED)
- N 3000 PSI CONC. W/8X6 WWF (6" WIDE x 6" THICK MINIMUM) BY DEVELOPER
- O CITY OF APOPKA APPROVED REDUCED PRESSURE BACKFLOW PREVENTER
- Q ALL FLANGES: PIPES, VALVES AND APPURTENSES SHALL HAVE 316 S.S. HARDWARE

NOTES:

1. THE METER ASSEMBLY TO BE INSTALLED ON PRIVATE PROPERTY.
2. PROVIDE A MINIMUM 10 FT. EASEMENT ON EACH SIDE OF THE METER ASSEMBLY TO THE CITY OF APOPKA FOR OPERATION AND MAINTENANCE OF THE METER ASSEMBLY.
3. DEVELOPER INSTALL: OWNER/DEVELOPER WILL BE RESPONSIBLE FOR THE INSTALLATION OF THIS FIRE LINE MASTER METER ASSEMBLY UNDER THE INSPECTION OF CITY OF APOPKA PERSONNEL.
4. THE BACKFLOW PREVENTION DEVICE TO BE FURNISHED,INSTALLED AND MAINTAINED BY THE OWNER/DEVELOPER.THE BACKFLOW PREVENTION DEVICE WILL BE TESTED BY CERTIFIED BACKFLOW PREVENTION DEVICE TESTER AFTER INSTALLATION. A COPY OF THE TEST RESULTS WILL BE PROVIDED TO THE CITY OF APOPKA PUBLIC SERVICES DEPARTMENT.THE BACKFLOW PREVENTION DEVICE WILL NEED TO BE AN AMERICAN WATER WORKS ASSOCIATION (AWWA) APPROVED DEVICE.
5. THE METER ASSEMBLY WILL BE OWNED AND MAINTAINED BY THE CITY OF APOPKA.BOTH METERS WITHIN THE MASTER ASSEMBLY WILL NEED TO BE COMPATIBLE WITH THE CITY'S AUTOMATIC METER READING (AMR) SYSTEM. THE CITY'S AMR SYSTEM IS MANUFACTURED BY SENSUS METERING SYSTEMS,INC.

CONSTRUCTION NOTES:

6. PIPE, FITTINGS AND VALVE SIZES DETERMINED BY LARGE METER SIZE.

4"X1.5" DRM W/4" BY-PASS
6"X2" DRM W/6" BY-PASS
8"X2" DRM W/8" BY-PASS
10"X2" DRM W/10" BY-PASS

MINIMUM SERVICE VALVE SIZE DETERMINED BY LARGE METER SIZE.

## FIRE LINE MASTER METER ASSEMBLY W/ BY-PASS (TYPICAL)

| CITY OF APOPKA DESIGN ENGINEERING DIVISION | JANUARY 2014 | FIG. 500 C |
|---|---|---|

GATE: DECORATIVE METAL DOUBLE GATE (6'Hx10'W), WITH 180° SWING HINGE.

WALLS: 6' HIGH, DUMPSTER SCREENING ENCLOSURES TO BE CONSTRUCTED OF CONCRETE BLOCK WITH EXTERIOR FINISH BEING BRICK OR STONE CAP BLOCK ON WALL. ANY VARIATION OF THE ABOVE MUST BE APPROVED BY COMMUNITY DEVELOPMENT DIRECTOR.

BOLLARDS: TO BE PLACED 10" FROM WALL AND TO BE YELLOW PAINTED.

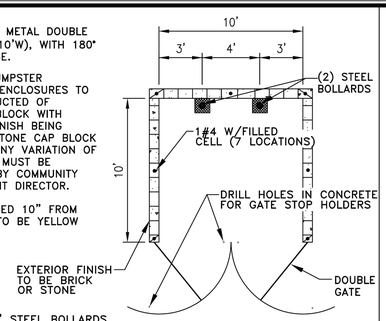


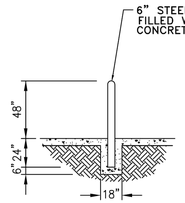


6" CONCRETE SLAB REINFORCED W/6"x6" #6 WWF OR FIBER MESH

BOLLARD DETAIL

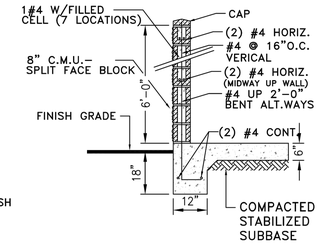


## DUMPSTER ENCLOSURE DETAIL

NTS

| CITY OF APOPKA DESIGN ENGINEERING DIVISION | JANUARY 2014 | FIG. 601 |
|---|---|---|

Call 48 hours before you dig

It's the Law! 1-800-432-4770

Sunshine State One Call of Florida, Inc.

**SHEET 22 OF 22**

CIVIL ENGINEERING | LAND PLANNING

APPIAN ENGINEERING LLC.

APPIANFL.COM • 407.960.5868

2221 Lee Road, Suite 27, Winter Park, Florida 32789

STATE OF FLORIDA CERTIFICATE OF AUTHORIZATION NO. 32574

| REV. | DATE | DESCRIPTION | BY |
|---|---|---|---|
| A | 09/17/19 | CITY OF APOPKA COMMENTS DATED 09/17/19 | SCS |
| A | 08/27/19 | CITY OF APOPKA COMMENTS DATED 08/27/19 | SCS |

UTILITY DETAILS

CENTRAL FLORIDA PREPARATORY SCHOOL
CITY OF APOPKA, FLORIDA

| | |
|---|---|
| DRAWN: S. SIERRA-GIL | SCALE N.T.S. |
| DESIGNED: L. CLASSON | PROJECT MMI-006 |
| CHECKED: L. CLASSON | SHEET C9.3 |
| DATE: 8/30/2019 | |

9/19/19

P:__project drawings\mmi-006 central fl preparatory school\Drawings\cad civil3d\Layouts\04 final development plan\UTILITY DETAILS.dwg Modified:9/5/2019 By:gcorral Plotted By:sofia sierra-gil

DocuSign Envelope ID: 904A70F9-2928-477A-8383-14E7D521DB73

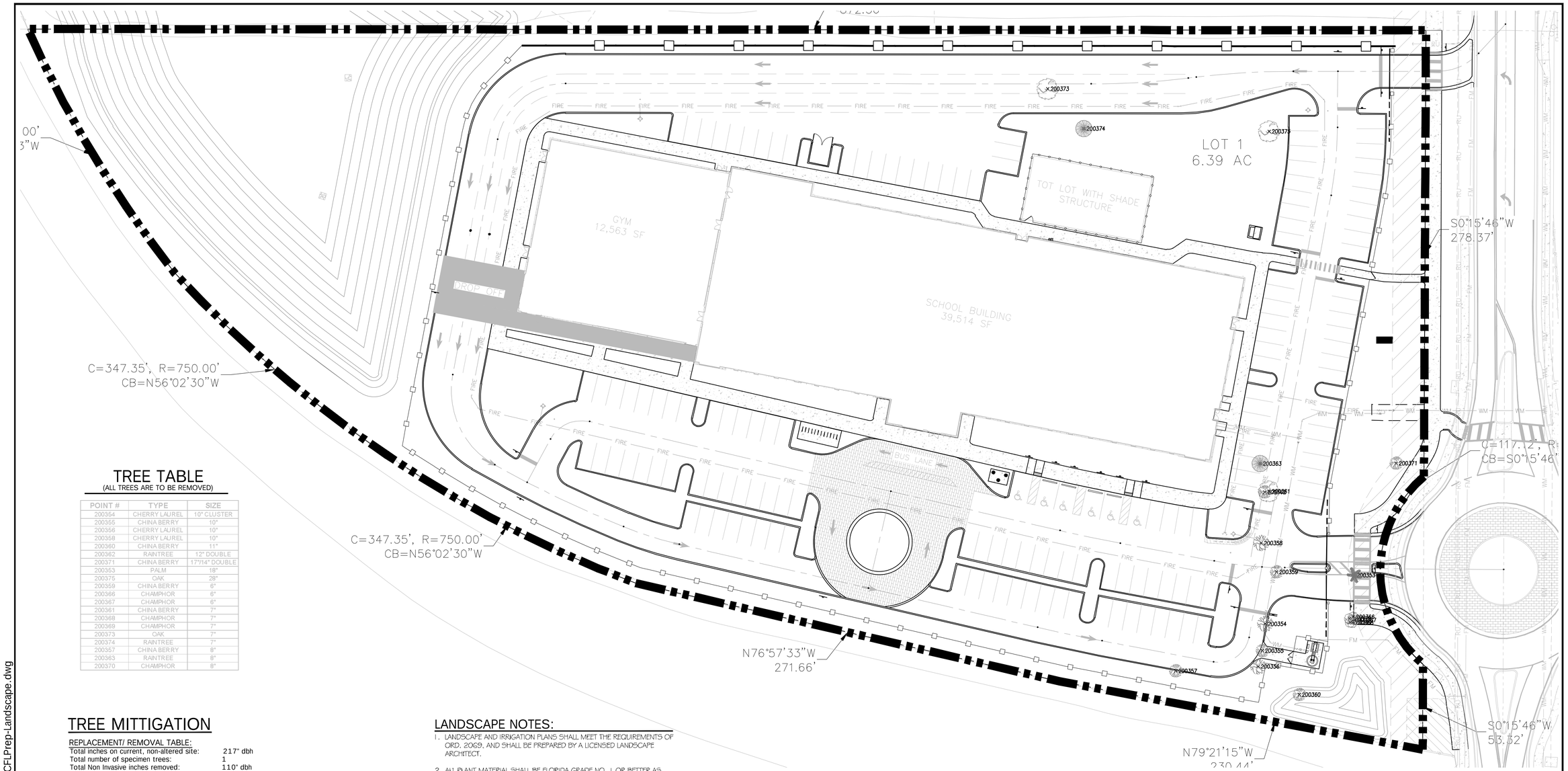


## TREE TABLE
(ALL TREES ARE TO BE REMOVED)

| POINT # | TYPE | SIZE |
|---|---|---|
| 200354 | CHERRY LAUREL | 10" CLUSTER |
| 200355 | CHINA BERRY | 10" |
| 200356 | CHERRY LAUREL | 10" |
| 200358 | CHERRY LAUREL | 10" |
| 200360 | CHINA BERRY | 11" |
| 200362 | RAINTREE | 12" DOUBLE |
| 200371 | CHINA BERRY | 17"/14" DOUBLE |
| 200353 | PALM | 18" |
| 200375 | OAK | 28" |
| 200359 | CHINA BERRY | 6" |
| 200366 | CHAMPHOR | 6" |
| 200367 | CHAMPHOR | 6" |
| 200361 | CHINA BERRY | 7" |
| 200368 | CHAMPHOR | 7" |
| 200369 | CHAMPHOR | 7" |
| 200373 | OAK | 7" |
| 200374 | RAINTREE | 7" |
| 200357 | CHINA BERRY | 8" |
| 200363 | RAINTREE | 8" |
| 200370 | CHAMPHOR | 8" |

## TREE MITTIGATION

REPLACEMENT/ REMOVAL TABLE:

| | |
|---|---|
| Total inches on current, non-altered site: | 217" dbh |
| Total number of specimen trees: | 1 |
| Total Non Invasive inches removed: | 110" dbh |
| Total inches retained: | 0" dbh |
| Total Specimen inches retained: | 0" dbh |
| Total inches required: | 110" dbh |
| Total inches replaced: | 231" dbh |
| Total inches post development: | 231" dbh |
| Maximum tree stock formula and calculations: | 800" dbh/ 1,142" dbh Specimen Trees |
| Site clearing area in square feet and acres: | 228,348 SF/ 6.39 AC |

## LANDSCAPE NOTES:

1. LANDSCAPE AND IRRIGATION PLANS SHALL MEET THE REQUIREMENTS OF ORD. 2069, AND SHALL BE PREPARED BY A LICENSED LANDSCAPE ARCHITECT.
2. ALL PLANT MATERIAL SHALL BE FLORIDA GRADE NO. 1 OR BETTER AS SPECIFIED IN "GRADES AND STANDARDS FOR NURSERY PLANTS", "PARTS 1 AND 2, BY DIVISION OF PLANT INDUSTRY, FLORIDA", DEPARTMENT OF AGRICULTURE AND CONSUMER SERVICES, AND SHALL CONFORM TO CURRENT AMERICAN ASSOCIATION OF NURSERYMEN STANDARDS FOR NURSERY STOCK, LATEST EDITION.
3. ALL PLANTING BEDS SHALL RECEIVE A 3" LAYER (1" OVER ROOTBALL) OF MINNIE PINE BARK NUGGET MULCH.
4. ALL PROPOSED TREES AND PLANTING BEDS SHALL BE IRRIGATED. SYSTEM WILL BE EQUIPPED WITH AN AUTOMATIC RAIN CUT-OFF SWITCH. RISERS ARE NOT ALLOWED.
5. A MINIMUM OF ONE CANOPY PER 30 FEET ON CENTER IS REQUIRED PER SECTION 3.6 OF THE CITY'S DEVELOPMENT DESIGN GUIDELINES. TO BE INSTALLED WITH THE DEVELOPMENT OF EACH INDIVIDUAL LOT.
6. ALL DISTURBED AREAS SHALL BE SODED WITH BAHIA SOD.

NOTES:

1. LANDSCAPING AND IRRIGATION SHALL BE CONSISTENT WITH SECTION 5.01 OF THE LAND DEVELOPMENT CODE.
2. LANDSCAPING AND IRRIGATION SHALL BE IN COMPLIANCE WITH WATER WISE ORDINANCE 2069.
3. IRRIGATION PLANS SHALL BE PROVIDED AT FINAL DEVELOPMENT PLAN SUBMITTAL.
4. IRRIGATION DISTRIBUTION EQUIPMENT SHALL BE 24" FROM VERTICAL STRUCTURES.
5. ALL ON-SITE LANDSCAPING AND AMENITIES REQUIRE A FINAL INSPECTION. CONTACT THE COMMUNITY DEVELOPMENT DEPARTMENT AT LEAST 7 DAYS PRIOR TO THE INSPECTION. THE SITE SUPERINTENDENT MUST BE ON SITE.

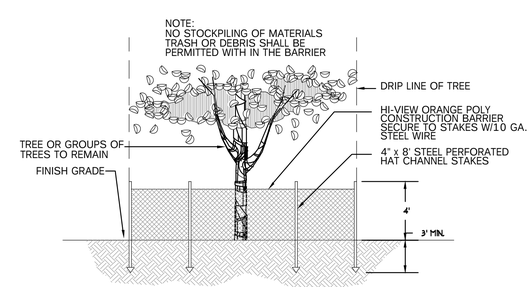


EXISTING TREE PROTECTION DETAIL 1 / LS-01
Scale: N.T.S.

LANDSCAPE AND IRRIGATION DESIGN

I CERTIFY THAT THE LANDSCAPE AND IRRIGATION DESIGN FOR THIS PROJECT IS IN ACCORDANCE WITH THE CITY OF APOPKA'S ORDINANCE 2069 ADOPTED MAY 21, 2008 WHICH ESTABLISHES WATERWISE LANDSCAPE AND IRRIGATION STANDARDS .

| SIGNATURE | REG. NO. | DATE |
|---|---|---|
| | LA0001764 | 07/15/19 |

Landscape Designs, LLC
■ Landscape Architecture
■ Site Planning
4663 Tiffany Woods Cir
Oviedo, FL 32765
PH: (407) 484-3414

PROJECT AND OWNER

MMI-006
CFL PREP
SCHOOL
City of Apopka
Florida

Appian Engineering
2221 Lee Road
Suite 17
Winter Park, FL 32789
(407) 960-5868

CONSULTANTS

LANDSCAPE ARCHITECT
CARL J. KELLY JR., RLA

LA0001764 STATE OF FLORIDA

DocuSigned by:
D96C07E49FDC41C...

REG.#: 0001764

| | |
|---|---|
| PROJECT NO. | APP13.01 |
| DESIGNED BY | CJK |
| DRAWN BY | CJK |
| CHECKED BY | CJK |
| DATE | 07/09/19 |

ISSUED FOR:
08/14/19 Site Changes
09/04/19 City Comments
09/18/19 City Comments

DRAWING SCALE
0 FT 15' 30' North
SCALE: 1"=30'-0"

DRAWING TITLE
TREE MITTIGATION SITE PLAN

DRAWING NUMBER
LS-01

SHEET 01 OF 0



C:\Jobs\APP013.01-MMI-006 CFL Prep\Landscape\Landscape\CodePlans\CFLPrep-Landscape.dwg

DocuSign Envelope ID: 904A70F9-2928-477A-8383-14E7D521DB73

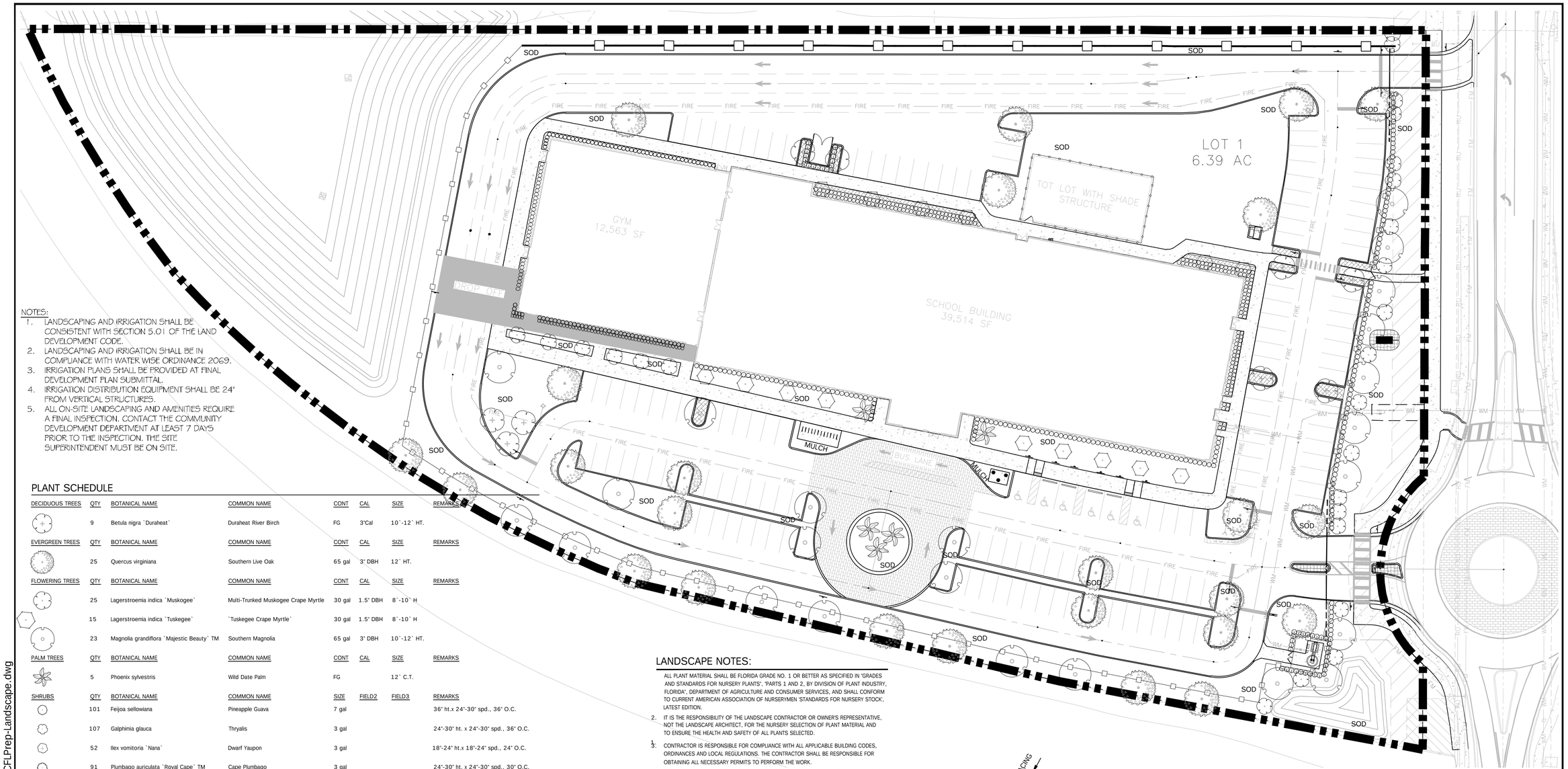


NOTES:

1. LANDSCAPING AND IRRIGATION SHALL BE CONSISTENT WITH SECTION 5.01 OF THE LAND DEVELOPMENT CODE.
2. LANDSCAPING AND IRRIGATION SHALL BE IN COMPLIANCE WITH WATER WISE ORDINANCE 2069.
3. IRRIGATION PLANS SHALL BE PROVIDED AT FINAL DEVELOPMENT PLAN SUBMITTAL.
4. IRRIGATION DISTRIBUTION EQUIPMENT SHALL BE 24" FROM VERTICAL STRUCTURES.
5. ALL ON-SITE LANDSCAPING AND AMENITIES REQUIRE A FINAL INSPECTION. CONTACT THE COMMUNITY DEVELOPMENT DEPARTMENT AT LEAST 7 DAYS PRIOR TO THE INSPECTION. THE SITE SUPERINTENDENT MUST BE ON SITE.

## PLANT SCHEDULE

| DECIDUOUS TREES | QTY | BOTANICAL NAME | COMMON NAME | CONT | CAL | SIZE | REMARKS |
|---|---|---|---|---|---|---|---|
| | 9 | Betula nigra `Duraheat` | Duraheat River Birch | FG | 3"Cal | 10`-12` HT. | |

| EVERGREEN TREES | QTY | BOTANICAL NAME | COMMON NAME | CONT | CAL | SIZE | REMARKS |
|---|---|---|---|---|---|---|---|
| | 25 | Quercus virginiana | Southern Live Oak | 65 gal | 3" DBH | 12` HT. | |

| FLOWERING TREES | QTY | BOTANICAL NAME | COMMON NAME | CONT | CAL | SIZE | REMARKS |
|---|---|---|---|---|---|---|---|
| | 25 | Lagerstroemia indica `Muskogee` | Multi-Trunked Muskogee Crape Myrtle | 30 gal | 1.5" DBH | 8`-10` H | |
| | 15 | Lagerstroemia indica `Tuskegee` | `Tuskegee Crape Myrtle` | 30 gal | 1.5" DBH | 8`-10` H | |
| | 23 | Magnolia grandiflora `Majestic Beauty` TM | Southern Magnolia | 65 gal | 3" DBH | 10`-12` HT. | |

| PALM TREES | QTY | BOTANICAL NAME | COMMON NAME | CONT | CAL | SIZE | REMARKS |
|---|---|---|---|---|---|---|---|
| | 5 | Phoenix sylvestris | Wild Date Palm | FG | | 12` C.T. | |

| SHRUBS | QTY | BOTANICAL NAME | COMMON NAME | SIZE | FIELD2 | FIELD3 | REMARKS |
|---|---|---|---|---|---|---|---|
| | 101 | Feijoa sellowiana | Pineapple Guava | 7 gal | | | 36" ht.x 24"-30" spd., 36" O.C. |
| | 107 | Galphimia glauca | Thryalis | 3 gal | | | 24"-30" ht. x 24"-30" spd., 36" O.C. |
| | 52 | Ilex vomitoria `Nana` | Dwarf Yaupon | 3 gal | | | 18"-24" ht.x 18"-24" spd., 24" O.C. |
| | 91 | Plumbago auriculata `Royal Cape` TM | Cape Plumbago | 3 gal | | | 24"-30" ht. x 24"-30" spd., 30" O.C. |
| | 47 | Viburnum obovatum | Walter`s Viburnum | 7 gal | | | 36" ht. x 30"-36" spd., 30" O.C. |

| GRASSES | QTY | BOTANICAL NAME | COMMON NAME | SIZE | FIELD2 | FIELD3 | REMARKS |
|---|---|---|---|---|---|---|---|
| | 221 | Muhlenbergia capillaris | Pink Muhly Grass | 3 gal | | | 18"-24" ht. x 24"-30" spd., 30" O.C. |

| GROUND COVERS | QTY | BOTANICAL NAME | COMMON NAME | CONT | FIELD2 | FIELD3 | REMARKS |
|---|---|---|---|---|---|---|---|
| | 280 | Dianella revoluta `Variegated` | Variegated Flax Lily | 1 gal | | | 12"-15" ht., 5-6 ppp, 24" O.C. |
| | 158 | Dietes bicolor | Fortnight Lily | 1 gal | | | 3-4 ppp, 18" O.C. |
| | 46 | Dietes vegeta | African Iris | 1 gal | | | 3-4 ppp, 18" O.C. |

SOD & MISCELLANEOUS ITEMS

MULCH Mini Pine Bark Nuggets
SOD Paspalum notatum-Bahia Sod

## LANDSCAPE NOTES:

1. ALL PLANT MATERIAL SHALL BE FLORIDA GRADE NO. 1 OR BETTER AS SPECIFIED IN 'GRADES AND STANDARDS FOR NURSERY PLANTS', 'PARTS 1 AND 2, BY DIVISION OF PLANT INDUSTRY, FLORIDA', DEPARTMENT OF AGRICULTURE AND CONSUMER SERVICES, AND SHALL CONFORM TO CURRENT AMERICAN ASSOCIATION OF NURSERYMEN 'STANDARDS FOR NURSERY STOCK', LATEST EDITION.
2. IT IS THE RESPONSIBILITY OF THE LANDSCAPE CONTRACTOR OR OWNER'S REPRESENTATIVE, NOT THE LANDSCAPE ARCHITECT, FOR THE NURSERY SELECTION OF PLANT MATERIAL AND TO ENSURE THE HEALTH AND SAFETY OF ALL PLANTS SELECTED.
3. CONTRACTOR IS RESPONSIBLE FOR COMPLIANCE WITH ALL APPLICABLE BUILDING CODES, ORDINANCES AND LOCAL REGULATIONS. THE CONTRACTOR SHALL BE RESPONSIBLE FOR OBTAINING ALL NECESSARY PERMITS TO PERFORM THE WORK.
4. THE LANDSCAPE CONTRACTOR IS RESPONSIBLE FOR INSPECTION OF EXISTING CONDITIONS AND PROMPTLY REPORTING ALL DISCREPANCIES AND IMPROPER CONDITIONS (WETNESS, MUCK, DEBRIS, ETC) TO LANDSCAPE ARCHITECT PRIOR TO BIDDING. CONTRACTOR IS RESPONSIBLE FOR SOIL ANALYSIS PRIOR TO INSTALLATION OF PLANTINGS, AND IS RESPONSIBLE FOR ALL SOIL AMENDMENTS TO CONFORM TO SPECIFICATIONS.
5. ALL TREES ON SITE SHOULD BE INSPECTED ANNUALLY AND AFTER ALL STORM EVENTS TO ENSURE THE HEALTH AND SAFETY OF ALL TREES.
6. THE LANDSCAPE CONTRACTOR SHALL ACQUAINT HIMSELF WITH ALL CIVIL DRAWING AS THEY RELATE TO PAVING SITE GRADING, AND ALL UTILITIES, (INCLUDING WATER, SEWER AND ELECTRICAL SUPPLY) TO PRECLUDE ANY MISUNDERSTANDING AND ENSURE TROUBLE FREE INSTALLATION. THE EXACT LOCATION OF ALL EXISTING STRUCTURES, UNDERGROUND UTILITIES, EXISTING UNDERGROUND SPRINKLERS AND PIPE MAY NOT BE INDICATED ON DRAWINGS. THE CONTRACTOR SHALL CONDUCT HIS WORK IN A MANNER TO PREVENT INTERRUPTION OR DAMAGE TO EXISTING SYSTEMS WHICH MUST REMAIN OPERATIONAL. THE CONTRACTOR SHALL PROTECT UTILITY SERVICES WHICH MUST REMAIN OPERATIONAL AND SHALL BE RESPONSIBLE FOR THERE REPLACEMENT IF DAMAGED BY HIM.
7. ALL PLANTING BEDS SHALL RECEIVE A 3" LAYER (1" OVER ROOTBALL) OF MINNIE PINE BARK NUGGET MULCH.
8. PROJECT WILL BE 100% IRRIGATED WITH HEAD TO HEAD COVERAGE. SYSTEM WILL BE EQUIPPED WITH AN AUTOMATIC RAIN CUT-OFF SWITCH.
9. IN THE EVENT OF A CONFLICT BETWEEN QUANTITIES ON THE PLANT LIST AND THE PLANS, THE PLAN SHALL TAKE PRECEDENT.

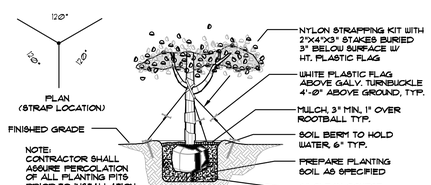


LARGE TREE DETAIL 1 LS-02
Scale: N.T.S.

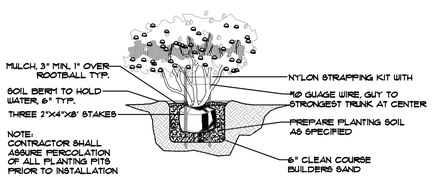


MULTI TRUNK TREE DETAIL 2 LS-02
Scale: N.T.S.

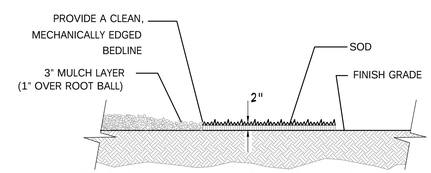


SOD PLACEMENT ADJ. TO MULCH 3 LS-02
Scale: N.T.S.

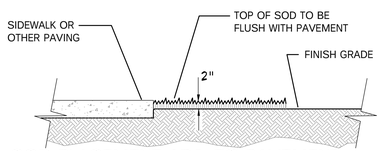


SOD PLACEMENT ADJ. TO PAVEMENT 4 LS-02
Scale: N.T.S.

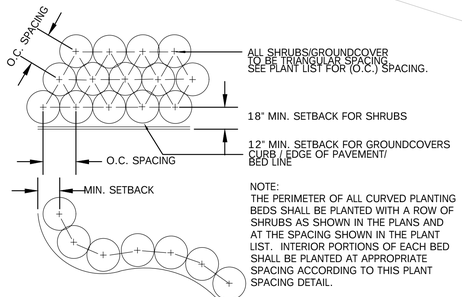


PLANT SPACING DETAIL 5 LS-02
Scale: N.T.S.

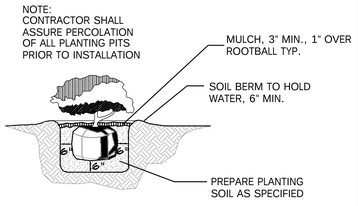


SHRUB DETAIL 6 LS-02
Scale: N.T.S.

LANDSCAPE AND IRRIGATION DESIGN

I CERTIFY THAT THE LANDSCAPE AND IRRIGATION DESIGN FOR THIS PROJECT IS IN ACCORDANCE WITH THE CITY OF APOPKA'S ORDINANCE 2069 ADOPTED MAY 21, 2008 WHICH ESTABLISHES WATERWISE LANDSCAPE AND IRRIGATION STANDARDS .

| SIGNATURE | REG. NO. | DATE |
|---|---|---|
| | LA0001764 | 07/15/19 |

Landscape Designs, LLC
■ Landscape Architecture
■ Site Planning
4663 Tiffany Woods Cir
Oviedo, FL 32765
PH: (407) 484-3414

PROJECT AND OWNER

MMI-006
CFL PREP SCHOOL
City of Apopka
Florida

Appian Engineering
2221 Lee Road
Suite 17
Winter Park, FL 32789
(407) 960-5868

CONSULTANTS

LANDSCAPE ARCHITECT
CARL J. KELLY JR., RLA

DocuSigned by:
D98C07E49FDC41C...
REG.#: 0001764

| | |
|---|---|
| PROJECT NO. | APP13.01 |
| DESIGNED BY | CJK |
| DRAWN BY | CJK |
| CHECKED BY | CJK |
| DATE | 07/09/19 |

ISSUED FOR:
08/14/19 Site Changes
09/04/19 City Comments
09/18/19 City Comments

DRAWING SCALE
0 FT 15' 30' North
SCALE: 1"=30'-0"

DRAWING TITLE
LANDSCAPE SITE PLAN

DRAWING NUMBER
LS-02

SHEET 02 OF 0 54

C:\Jobs\APP013.01-MMI-006 CFL Prep\Landscape\Landscape\CodePlans\CFLPrep-Landscape.dwg

DocuSign Envelope ID: 904A70F9-2928-477A-8383-14E7D521DB73

# IRRIGATION SCHEDULE

| SYMBOL | MANUFACTURER/MODEL | QTY | ARC | PSI | GPM | RADIUS |
|---|---|---|---|---|---|---|
| | Rain Bird 1806-PRS-NP 15 Stnp Series | 15 | CST | 30 | 1.21 | 4x30' |
| | Rain Bird 1806-PRS-NP 5 Series MPR | 160 | 180 | 30 | 0.20 | 5' |
| | Rain Bird 1806-PRS-NP 5 Series MPR | 2 | 90 | 30 | 0.10 | 5' |
| | Rain Bird 1806-PRS-NP 8 Series MPR | 55 | 180 | 30 | 0.52 | 8' |
| | Rain Bird 1806-PRS-NP 8 Series MPR | 7 | 90 | 30 | 0.26 | 8' |
| | Rain Bird 1806-PRS-NP 10 Series MPR | 8 | 180 | 30 | 0.79 | 10' |
| | Rain Bird 1806-PRS-NP 12 Series MPR | 21 | 180 | 30 | 1.30 | 12' |
| | Rain Bird 1806-PRS-NP 12 Series MPR | 2 | 90 | 30 | 0.65 | 12' |
| | Rain Bird 1806-PRS-NP 15 Series MPR | 14 | 180 | 30 | 1.85 | 15' |
| | Rain Bird 1806-PRS-NP 15 Series MPR | 6 | 90 | 30 | 0.92 | 15' |
| | Rain Bird 1800-1400 Flood | 40 | 360 | 30 | 0.25 | 1' |
| | Rain Bird 1800-1400 Flood | 62 | 360 | 30 | 0.50 | 1' |

| SYMBOL | MANUFACTURER/MODEL/DESCRIPTION | QTY | PSI | GPM | RADIUS |
|---|---|---|---|---|---|
| 0.75 | Rain Bird 3504-PC-NP<br>Turf Rotor, 4" popup, adjustable and full circle, with non-potable cover | 86 | 25 | 0.54 | 15' |
| 1.0 | Rain Bird 3504-PC-NP<br>Turf Rotor, 4" popup, adjustable and full circle, with non-potable cover | 5 | 25 | 0.77 | 20' |
| 1.5 | Rain Bird 3504-PC-NP<br>Turf Rotor, 4" popup, adjustable and full circle, with non-potable cover | 5 | 25 | 1.06 | 23' |
| 2.0 | Rain Bird 3504-PC-NP<br>Turf Rotor, 4" popup, adjustable and full circle, with non-potable cover | 11 | 25 | 1.40 | 27' |
| 3.0 | Rain Bird 3504-PC-NP<br>Turf Rotor, 4" popup, adjustable and full circle, with non-potable cover | 8 | 25 | 2.17 | 29' |
| 4.0 | Rain Bird 3504-PC-NP<br>Turf Rotor, 4" popup, adjustable and full circle, with non-potable cover | 23 | 25 | 2.97 | 31' |

| SYMBOL | MANUFACTURER/MODEL/DESCRIPTION | QTY |
|---|---|---|
| | Rain Bird XCZ-150-COM<br>High flow control zone kit with 1-1/2" PESB valve, two 1" filters and two 40psi pressure regulators. | 2 |
| | Rain Bird MDCFPCAP<br>Dripline Flush Valve purple cap in compression fitting coupler. | 2 |
| | Rain Bird AR Valve Kit<br>1" Air Relief Valve kit with 6" drip valve box. | 2 |
| | Area to Receive Dripline<br>Rain Bird LD-OG-24<br>Landscape Dripline with 0.61gph emitters at 24" o.c. Dripline laterals spaced at 24" apart, with emitters offset for triangular pattern. | 6,072 s.f. |

| SYMBOL | MANUFACTURER/MODEL/DESCRIPTION | QTY |
|---|---|---|
| | Rain Bird PESB-PRS-D<br>1", 1-1/2", 2" Plastic Industrial Valves. Low Flow Operating Capability, Globe Configuration. With Pressure Regulating Module, and Scrubber Technology for Reliable Performance in Dirty Water Irrigation Applications. | 6 |
| C | Rain Bird ESP-LXME (2)<br>Plastic wall mount controller with 8 to 48 stations adjusted modularly in four station increments, with SM4, SM8, and SM12 station modules. Supply number of stations as required for project at one station per valve. | 1 |
| RS | Rain Bird RSD-BEx (2)<br>Rain Sensor, with bracket, extension wire | 1 |
| M | Water Meter 2"<br>RE-USE METER | 1 |
| | Irrigation Lateral Line: Polyethylene and PVC Class 200<br>Polyethylene SDR-7 up to 1-1/4", then PVC Class 200 SDR 21 for 1-1/2" and larger. Only lateral transition pipe sizes 3/4" and above are indicated on the plan, with all others being 1/2" in size. | 10,290 l.f. |
| | Irrigation Mainline: PVC Class 200 SDR 21 | 1,914 l.f. |
| | Pipe Sleeve: PVC Schedule 40<br>Typical pipe sleeve for irrigation pipe. Pipe sleeve size shall allow for irrigation piping and their related couplings to easily slide through sleeving material. Extend sleeves 18 inches beyond edges of paving or construction. | 1,117 l.f. |

Valve Callout

Valve Number
Valve Flow
Valve Size

NOTES:
1. ALL PIPE SIZES SHALL NOT EXCEED A VELOCITY OF 5/ SEC.
2. ALL HEADS SHALL BE MIN. 4" FROM PAVED SURFACES
3. USE PRESSURE COMPENSATING SCREENS (RAIN BIRD PCS-090) TO ADJUST NOZZLE RADIUS WERE NECESSARY

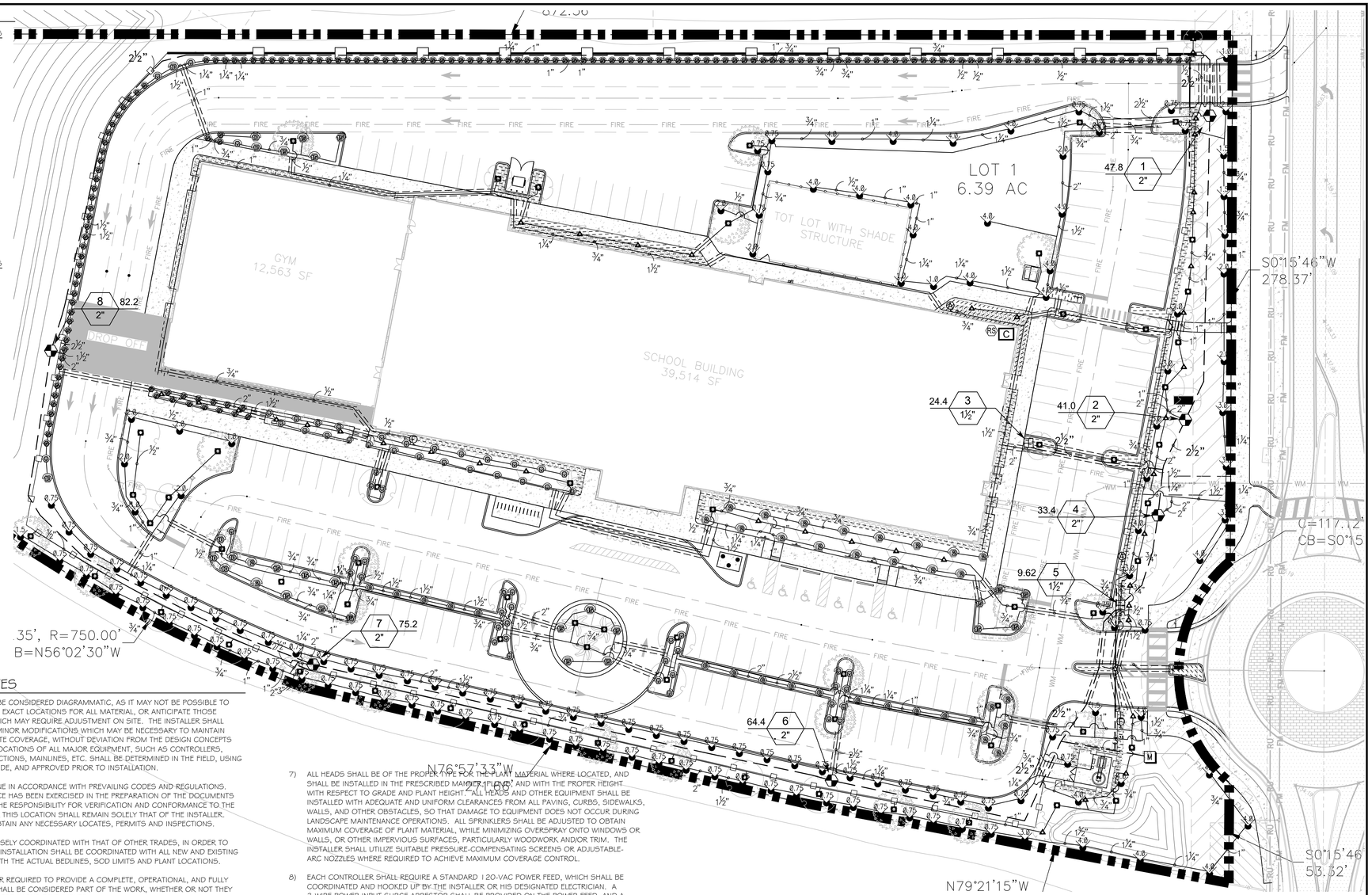


## GENERAL NOTES

1) THE DRAWINGS ARE TO BE CONSIDERED DIAGRAMMATIC, AS IT MAY NOT BE POSSIBLE TO ACCURATELY DEPICT THE EXACT LOCATIONS FOR ALL MATERIAL, OR ANTICIPATE THOSE IN-FIELD VARIATIONS WHICH MAY REQUIRE ADJUSTMENT ON SITE. THE INSTALLER SHALL BE EXPECTED TO MAKE MINOR MODIFICATIONS WHICH MAY BE NECESSARY TO MAINTAIN COMPLETE AND ACCURATE COVERAGE, WITHOUT DEVIATION FROM THE DESIGN CONCEPTS OR INTENT. THE FINAL LOCATIONS OF ALL MAJOR EQUIPMENT, SUCH AS CONTROLLERS, VALVES, SUPPLY CONNECTIONS, MAINLINES, ETC. SHALL BE DETERMINED IN THE FIELD, USING THE DRAWINGS AS A GUIDE, AND APPROVED PRIOR TO INSTALLATION.

2) ALL WORK SHALL BE DONE IN ACCORDANCE WITH PREVAILING CODES AND REGULATIONS. ALTHOUGH DUE DILIGENCE HAS BEEN EXERCISED IN THE PREPARATION OF THE DOCUMENTS TO AVOID CONFLICTS, THE RESPONSIBILITY FOR VERIFICATION AND CONFORMANCE TO THE PARTICULAR CODES FOR THIS LOCATION SHALL REMAIN SOLELY THAT OF THE INSTALLER. THE INSTALLER SHALL OBTAIN ANY NECESSARY LOCATES, PERMITS AND INSPECTIONS.

3) ALL WORK SHALL BE CLOSELY COORDINATED WITH THAT OF OTHER TRADES, IN ORDER TO AVOID CONFLICTS. THE INSTALLATION SHALL BE COORDINATED WITH ALL NEW AND EXISTING IMPROVEMENTS, AND WITH THE ACTUAL BEDLINES, SOD LIMITS AND PLANT LOCATIONS.

4) ALL MATERIAL AND LABOR REQUIRED TO PROVIDE A COMPLETE, OPERATIONAL, AND FULLY GUARANTEED SYSTEM SHALL BE CONSIDERED PART OF THE WORK, WHETHER OR NOT THEY ARE SPECIFICALLY INDICATED IN THE DOCUMENTS.

5) UNLESS SPECIFICALLY STATED IN THE DOCUMENTS, ALL MAINLINE PIPING AND WIRING PASSING UNDER PAVED SURFACES SHALL BE SLEEVED WITH SCH. 40 PVC, SIZED TWO SIZES LARGER THAN THE CONTAINED PIPE, OR 1 |" OR LARGER AS NEEDED FOR CONTROL WIRING. LATERAL PIPING PASSING UNDER TRAFFIC-BEARING PAVEMENT OF ANY WIDTH, OR UNDER SIDEWALKS 5' IN WIDTH OR GREATER, SHALL BE SLEEVED IN A SIMILAR MANNER. IT SHALL BE ASSUMED THAT ALL SLEEVING IS TO BE PART OF THIS WORK, UNLESS SPECIFICALLY EXCEPTED IN THE DOCUMENTS. ANY NEEDED SLEEVES WHICH ARE UNUSABLE OR CANNOT BE FOUND SHALL BE REPORTED IMMEDIATELY TO THE PROJECT MANAGER. ROADWAY/DRIVEWAY SLEEVES ARE SHOWN ON THIS DRAWING. SIDEWALK SLEEVES ARE NOT SHOWN, BUT ARE UNDERSTOOD.

6) CONTROL WIRING SHALL BE ROUTED WITH THE MAINLINE WHEREVER POSSIBLE. LOW-VOLTAGE WIRING SHALL BE UF#14-1 PVC JACKETED, SINGLE CONDUCTOR CABLE, COLORED RED FOR "HOT" WIRES, WHITE FOR VALVE COMMON, AND BLUE FOR SPARES. A MINIMUM OF TWO OF WHICH SHALL BE RUN FROM THE CONTROLLER LOCATION TO THE FARTHEST ZONE VALVE IN EACH DIRECTION. WIRES SHALL BE INSTALLED WITH ADEQUATE SLACK AND SURGE/EXPANSION LOOPS, AND SHALL BE SPLICED ONLY IN VALVE BOXES, USING SPEARS "DRI-SPLICE" WIRE CONNECTORS AND SEALANT, OR OTHER WATERPROOF TYPE, IF PRIOR APPROVAL IS OBTAINED.

7) ALL HEADS SHALL BE OF THE PROPER TYPE FOR THE PLANT MATERIAL WHERE LOCATED, AND SHALL BE INSTALLED IN THE PRESCRIBED MANNER, PLUMB, AND WITH THE PROPER HEIGHT WITH RESPECT TO GRADE AND PLANT HEIGHT. ALL HEADS AND OTHER EQUIPMENT SHALL BE INSTALLED WITH ADEQUATE AND UNIFORM CLEARANCES FROM ALL PAVING, CURBS, SIDEWALKS, WALLS, AND OTHER OBSTACLES, SO THAT DAMAGE TO EQUIPMENT DOES NOT OCCUR DURING LANDSCAPE MAINTENANCE OPERATIONS. ALL SPRINKLERS SHALL BE ADJUSTED TO OBTAIN MAXIMUM COVERAGE OF PLANT MATERIAL, WHILE MINIMIZING OVERSPRAY ONTO WINDOWS OR WALLS, OR OTHER IMPERVIOUS SURFACES, PARTICULARLY WOODWORK AND/OR TRIM. THE INSTALLER SHALL UTILIZE SUITABLE PRESSURE-COMPENSATING SCREENS OR ADJUSTABLE-ARC NOZZLES WHERE REQUIRED TO ACHIEVE MAXIMUM COVERAGE CONTROL.

8) EACH CONTROLLER SHALL REQUIRE A STANDARD 120-VAC POWER FEED, WHICH SHALL BE COORDINATED AND HOOKED UP BY THE INSTALLER OR HIS DESIGNATED ELECTRICIAN. A 3-WIRE POWER INPUT SURGE ARRESTOR SHALL BE PROVIDED ON THE POWER FEED, AND A DEDICATED GROUND ROD OR RODS SHALL BE INSTALLED, WHICH PROVIDE A RESISTANCE OF NO GREATER THAN 10 OHMS TO EARTH.

9) EACH CONTROLLER SHALL BE EQUIPPED WITH A PROPERLY LOCATED AND INSTALLED RAIN SHUTOFF DEVICE (MINI-CLIK II), WHICH SHALL BE LOCATED IN SUCH A MANNER SO THAT IT IS UNOBSTRUCTED AND DIRECTLY EXPOSED TO NATURAL RAINFALL AND SUNLIGHT FROM ALL DIRECTIONS, BUT NOT TO RUNOFF WATER FROM ROOFS, ETC.

10) THE MINIMUM SUPPLY REQUIREMENT FOR THE SYSTEM AS DESIGNED IS 85 GPM AT 65 PSI

11) THE INSTALLER SHALL BE EXPECTED TO BE FAMILIAR WITH AND FOLLOW THE INSTRUCTIONS CONTAINED HEREIN, ON THE DRAWINGS, IN THE CONSTRUCTION DETAILS, AND IN THE WRITTEN SPECIFICATIONS. SHOULD A CONFLICT BE DISCOVERED WITHIN THE DOCUMENTS, HE SHALL IMMEDIATELY NOTIFY THE PROJECT MANAGER AND REQUEST CLARIFICATION.

12) THIS INSTALLATION SHALL BE SUPPLIED BY RECLAIMED WATER.
THE WORK SHALL INCLUDE ANY AND ALL MATERIALS AND METHODS REQUIRED FOR THE APPROVED INSTALLATION THEREOF, WHETHER OR NOT SPECIFICALLY INDICATED WHETHER OR NOT SPECIFICALLY INDICATED IN THE DOCUMENTS, INCLUDING THE INSTALLATION OF ANY REQUIRED WARNING SIGNAGE.

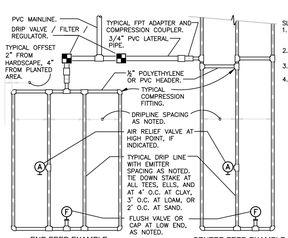


3 TYPICAL DRIPLINE LAYOUT REQUIREMENTS
N.T.S. DETAIL-FILE

SLOPED CONDITION NOTE:
1. INSTALL AIR RELIEF VALVE AT HIGHEST POINT.
2. SPACING AS NOTED ON TOP ⅓ OF SLOPE.
3. SPACING AT BOTTOM ⅔ AS NOTED PLUS 25%.
4. WHEN ELEVATION CHANGE IS 10 FT. OR MORE, ZONE BOTTOM ⅓ SEPARATELY.

MAXIMUM LATERAL LENGTH (FEET)

| | EMITTER FLOW RATE GPH | | | | | |
|---|---|---|---|---|---|---|
| | 12" SPACING | | 18" SPACING | | 24" SPACING | |
| PSI | 0.6 | 0.9 | 0.6 | 0.9 | 0.6 | 0.9 |
| 10 | 125 | 96 | 175 | 135 | 218 | 171 |
| 20 | 249 | 191 | 350 | 171 | 442 | 340 |
| 30 | 307 | 236 | 434 | 333 | 550 | 422 |
| 40 | 350 | 268 | 495 | 380 | 627 | 171 |
| 50 | 125 | 96 | 175 | 135 | 218 | 171 |
| 60 | 125 | 96 | 175 | 135 | 218 | 171 |

GRID PRECIPITATION RATES (IN/HR)

| EMITTER SPACING | LATERAL SPACING | EMITTER FLOW RATE 0.6 | 0.9 |
|---|---|---|---|
| 12 | 12 | 0.96 | 1.44 |
| 18 | 18 | 0.69 | 1.03 |
| 24 | 24 | 0.28 | 0.41 |

LATERAL FLOW PER 100 FT (GPM)

| EMITTER FLOW | 12" SPACING | 18" SPACING | 24" SPACING |
|---|---|---|---|
| 0.6 GPH | 1.0 GPM | 0.67 GPM | 0.50 GPM |
| 0.9 GPH | 1.5 GPM | 1.0 GPM | 0.75 GPM |

MAXIMUM FLOW PER ZONE

| SCHEDULE 40 PVC HEADER SIZE | MAX GPM | PSI LOSS |
|---|---|---|
| 1/2" | 4.7 GPM | 7.7 PSI |
| 3/4" | 8.3 GPM | 5.6 PSI |
| 1" | 13.5 GPM | 4.2 PSI |
| 1-1/2" | 33.9 GPM | 2.9 PSI |
| 2" | 52.4 GPM | 1.9 PSI |

| POLY PIPE HEADER SIZE | | |
|---|---|---|
| 1/2" | 4.7 GPM | 8.8 PSI |
| 3/4" | 8.3 GPM | 6.3 PSI |
| 1" | 13.5 GPM | 4.8 PSI |
| 1-1/2" | 31.8 GPM | 2.9 PSI |
| 2" | 52.4 GPM | 2.2 PSI |

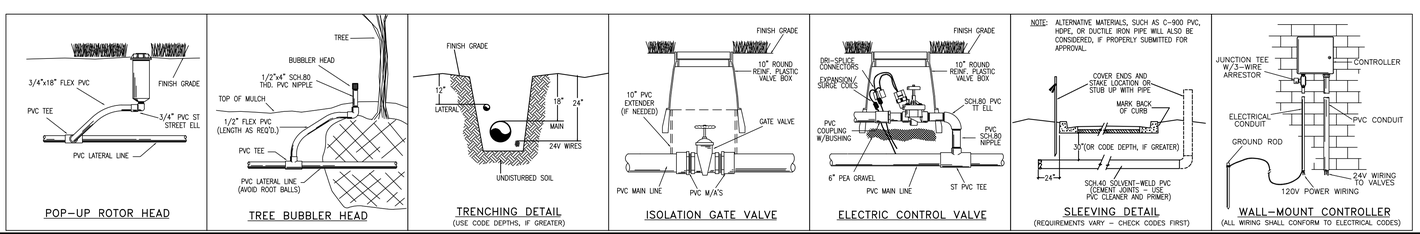


NOTE: ALTERNATIVE MATERIALS, SUCH AS C-900 PVC, HDPE, OR DUCTILE IRON PIPE WILL ALSO BE CONSIDERED, IF PROPERLY SUBMITTED FOR APPROVAL.




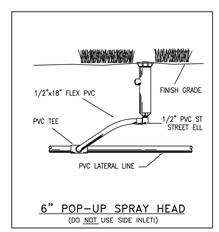


6" POP-UP SPRAY HEAD
(DO NOT USE SIDE INLET!)

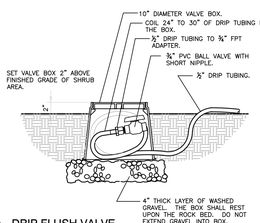


2 DRIP FLUSH VALVE
N.T.S. DETAIL-FILE

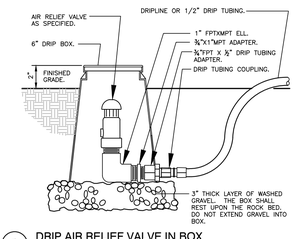


1 DRIP AIR RELIEF VALVE IN BOX
N.T.S. DETAIL-FILE

I CERTIFY THAT THE LANDSCAPE AND IRRIGATION DESIGN FOR THIS PROJECT IS IN ACCORDANCE WITH THE CITY OF APOPKA'S ORDINANCE 2069 ADOPTED MAY 21, 2008 WHICH ESTABLISHES WATERWISE LANDSCAPE AND IRRIGATION STANDARDS .

| SIGNATURE | REG. NO. | DATE |
|---|---|---|
| | LA0001764 | 07/15/19 |


Landscape Designs, LLC
■ Landscape Architecture
■ Site Planning
4663 Tiffany Woods Cir
Oviedo, FL 32765
PH: (407) 484-3414


PROJECT AND OWNER

MMI-006
CFL PREP SCHOOL
City of Apopka
Florida


Appian Engineering
2221 Lee Road
Suite 17
Winter Park, FL 32789
(407) 960-5868


CONSULTANTS


LANDSCAPE ARCHITECT
CARL J. KELLY JR., RLA
LA0001764
DocuSigned by:
D96C07E49FDC41C...
REG.#: 0001764


| | |
|---|---|
| PROJECT NO. | APP13.01 |
| DESIGNED BY | CJK |
| DRAWN BY | CJK |
| CHECKED BY | CJK |
| DATE | 07/09/19 |

ISSUED FOR:
08/15/19 Site Changes
09/04/19 City Comments
09/18/19 City Comments

DRAWING SCALE
0 FT 15' 30' North
SCALE: 1"=30'-0"

DRAWING TITLE
IRRIGATION SITE PLAN

DRAWING NUMBER
IR-01



C:\Jobs\APP013.01-MMI-006 CFL Prep\Landscape\Landscape\CodePlans\CFLPrep-Irrigation.dwg

# *Marden Ridge - Lot 1*

Marden Road
Apopka, Florida
ALTA / NSPS Land Title,
Topographic & Tree Survey

## LEGAL DESCRIPTION:

(PER ALTA COMMITMENT FOR TITLE INSURANCE BY FIRST AMERICAN TITLE INSURANCE COMPANY, FILE NO.: NCS-958347-ORL, ISSUING OFFICE FILE NUMBER: NCS-958347-ORL, COMMITMENT NUMBER: NCS-958347-ORL, BEARING A COMMITMENT DATE OF APRIL 10, 2019 AT 8:00 AM.)

THE LAND REFERRED TO HEREIN BELOW IS SITUATED IN THE COUNTY OF ORANGE, STATE OF FLORIDA, AND IS DESCRIBED AS FOLLOWS:

PARCEL 1:

LOT 1, MARDEN RIDGE ACCORDING TO THE PLAT THEREOF RECORDED IN PLAT BOOK 87, PAGE 66, PUBLIC RECORDS OF ORANGE COUNTY, FLORIDA.

LESS AND EXCEPT THEREFROM A PORTION OF LOT 1 CONVEYED TO THE CITY OF APOPKA, FLORIDA, A MUNICIPAL CORPORATION, BY SPECIAL WARRANTY DEED RECORDED IN OFFICIAL RECORDS INSTRUMENT #20160580139, PUBLIC RECORDS OF ORANGE COUNTY, FLORIDA.

PARCEL 2:

NON-EXCLUSIVE EASEMENTS FOR THE BENEFIT OF PARCEL 1 AS CONTAINED IN ARTICLE 4 OF THE DECLARATION OF COVENANTS, CONDITIONS, RESTRICTIONS AND OBLIGATIONS MARDEN RIDGE RECORDED IN OFFICIAL RECORDS BOOK 11032, PAGE 6298; AS AFFECTED BY FIRST AMENDMENT TO DECLARATION OF COVENANTS, CONDITIONS, RESTRICTIONS AND EASEMENTS RECORDED IN OFFICIAL RECORDS INSTRUMENT #20160536671, PUBLIC RECORDS OF ORANGE COUNTY, FLORIDA.

## SCHEDULE B-II, EXCEPTIONS:

(PER ALTA COMMITMENT FOR TITLE INSURANCE BY FIRST AMERICAN TITLE INSURANCE COMPANY, FILE NO.: NCS-958347-ORL, ISSUING OFFICE FILE NUMBER: NCS-958347-ORL, COMMITMENT NUMBER: NCS-958347-ORL, BEARING A COMMITMENT DATE OF APRIL 10, 2019 AT 8:00 AM.)

9 — 9. PLAT OF MARDEN RIDGE RECORDED IN PLAT BOOK 87, PAGE 66, PUBLIC RECORDS OF ORANGE COUNTY, FLORIDA

**- CROSS-ACCESS EASEMENT OVER LOTS 1 AND 2 AFFECTS SUBJECT PROPERTY, IS BLANKET IN NATURE, AND IS THEREFORE NOT PLOTTED.**
**- MONUMENT SIGN EASEMENT AFFECTS SUBJECT PROPERTY AND IS PLOTTED HEREON.**

10 — 10. TAKING OF LIMITED ACCESS RIGHT TOGETHER WITH RIGHTS OF INGRESS, EGRESS, LIGHT, AIR AND VIEW TO PORTIONS OF THE ABUTTING WESTERN BELTWAY (STATE ROAD 429) PURSUANT TO THE ORDER OF TAKING RECORDED IN OFFICIAL RECORDS BOOK 5442, PAGE 3947, PUBLIC RECORDS OF ORANGE COUNTY, FLORIDA.

**- AFFECTS SUBJECT PROPERTY. DESCRIBES RIGHT OF WAY TAKING FOR STATE ROAD 451 LYING WEST OF SUBJECT PROPERTY.**

11 — 11. DEVELOPMENT RIGHTS AS EVIDENCED AND AFFECTED BY ASSIGNMENT AND ASSUMPTION OF DEVELOPMENT RIGHTS RECORDED IN OFFICIAL RECORDS BOOK 9799, PAGE 5975, PUBLIC RECORDS OF ORANGE COUNTY, FLORIDA.

**- AFFECTS SUBJECT PROPERTY AND IS NOT A SURVEY MATTER.**

12 — 12. VESTED RIGHTS AS EVIDENCED AND AFFECTED BY PARTIAL ASSIGNMENT OF VESTED RIGHTS RECORDED IN OFFICIAL RECORDS BOOK 9799, PAGE 5981, PUBLIC RECORDS OF ORANGE COUNTY, FLORIDA.

**- AFFECTS SUBJECT PROPERTY AND IS NOT A SURVEY MATTER.**

13 — 13. RECORDED NOTICE OF ENVIRONMENTAL RESOURCE PERMIT RECORDED IN OFFICIAL RECORDS BOOK 11032, PAGE 4951, PUBLIC RECORDS OF ORANGE COUNTY, FLORIDA.

**- AFFECTS SUBJECT PROPERTY AND IS NOT A SURVEY MATTER.**

14 — 14. RECORDED NOTICE OF ENVIRONMENTAL RESOURCE PERMIT RECORDED IN OFFICIAL RECORDS BOOK 11035, PAGE 7745, PUBLIC RECORDS OF ORANGE COUNTY, FLORIDA.

**- AFFECTS SUBJECT PROPERTY AND IS NOT A SURVEY MATTER.**

15 — 15. DECLARATION OF COVENANTS, CONDITIONS, RESTRICTIONS AND OBLIGATIONS MARDEN RIDGE, WHICH CONTAINS EASEMENTS AND PROVISIONS FOR PRIVATE CHARGES AND ASSESSMENTS, RECORDED IN OFFICIAL RECORDS BOOK 11032, PAGE 6298; AS AFFECTED BY THE FIRST AMENDMENT TO DECLARATION OF COVENANTS, CONDITIONS, RESTRICTIONS AND EASEMENTS RECORDED IN OFFICIAL RECORDS INSTRUMENT #20160536671, PUBLIC RECORDS OF ORANGE COUNTY, FLORIDA.

**- DOCUMENT DESCRIBES SEVERAL EASEMENTS LISTED BELOW:**

**1) ACCESS EASEMENT AFFECTS SUBJECT PROPERTY, IS BLANKET IN NATURE, AND IS THEREFORE NOT PLOTTED.**
**2) UTILITY EASEMENTS AFFECT SUBJECT PROPERTY, ARE BLANKET IN NATURE, AND ARE THEREFORE NOT PLOTTED.**
**3) DRAINAGE AND RETENTION EASEMENTS AFFECT SUBJECT PROPERTY, ARE BLANKET IN NATURE, AND ARE THEREFORE NOT PLOTTED.**
**4) GREYWATER EASEMENTS AFFECT SUBJECT PROPERTY, ARE BLANKET IN NATURE, AND ARE THEREFORE NOT PLOTTED.**
**5) CROSS-PARKING EASEMENT AFFECTS SUBJECT PROPERTY, IS BLANKET IN NATURE, AND IS THEREFORE NOT PLOTTED.**
**6) COMMON PROPERTY EASEMENT AFFECTS SUBJECT PROPERTY, IS BLANKET IN NATURE, AND IS THEREFORE NOT PLOTTED.**
**7) ENCROACHMENT EASEMENT AFFECTS SUBJECT PROPERTY, IS BLANKET IN NATURE, AND IS THEREFORE NOT PLOTTED.**
**8) DECLARANT EASEMENTS FOR MARKETING AND SALES, GOVERNMENTAL REQUIREMENTS, ADDITIONAL PURPOSES AND CONSTRUCTION AFFECT SUBJECT PROPERTY, ARE BLANKET IN NATURE AND ARE THEREFORE NOT PLOTTED.**

16 — 16. MARDEN ROAD INTERCHANGE COST SHARING AGREEMENT RECORDED IN OFFICIAL RECORDS BOOK 10989, PAGE 4329; AS AFFECTED BY FIRST AMENDMENT TO MARDEN ROAD INTERCHANGE COST SHARING AGREEMENT RECORDED IN OFFICIAL RECORDS INSTRUMENT #20160580141; AS AFFECTED BY SECOND AMENDMENT TO MARDEN ROAD INTERCHANGE COST SHARING AGREEMENT RECORDED IN OFFICIAL RECORDS INSTRUMENT #20160582876, PUBLIC RECORDS OF ORANGE COUNTY, FLORIDA.

**- AFFECTS SUBJECT PROPERTY AND IS NOT A SURVEY MATTER.**

17 — 17. EASEMENT AND MEMORANDUM OF AGREEMENT IN FAVOR OF BRIGHT HOUSE NETWORKS, LLC RECORDED IN OFFICIAL RECORDS INSTRUMENT #20160604581, PUBLIC RECORDS OF ORANGE COUNTY, FLORIDA.

**- BRIGHT HOUSE NETWORKS, LLC EASEMENT AFFECTS SUBJECT PROPERTY, IS BLANKET IN NATURE, AND IS THEREFORE NOT PLOTTED.**

18 — 18. EASEMENTS IN FAVOR OF DUKE ENERGY FLORIDA, LLC D/B/A DUKE ENERGY RECORDED IN OFFICIAL RECORDS INSTRUMENT #20170291432, PUBLIC RECORDS OF ORANGE COUNTY, FLORIDA.

**- DUKE ENERGY EASEMENT AFFECTS SUBJECT PROPERTY AND IS PLOTTED HEREON.**

19 — 19. TERMS AND CONDITIONS OF ANY EXISTING UNRECORDED LEASE(S), AND ALL RIGHTS OF LESSEE(S) AND ANY PARTIES CLAIMING THROUGH THE LESSEE(S) UNDER THE LEASE(S).

**- NOT A SURVEY MATTER.**

## TREE TABLE:

| POINT # | TYPE | SIZE |
|---|---|---|
| 200354 | CHERRY LAUREL | 10" CLUSTER |
| 200355 | CHINA BERRY | 10" |
| 200356 | CHERRY LAUREL | 10" |
| 200358 | CHERRY LAUREL | 10" |
| 200360 | CHINA BERRY | 11" |
| 200362 | RAINTREE | 12" DOUBLE |
| 200371 | CHINA BERRY | 17"/14" DOUBLE |
| 200353 | PALM | 18" |
| 200375 | OAK | 28" |
| 200359 | CHINA BERRY | 6" |
| 200366 | CHAMPHOR | 6" |
| 200367 | CHAMPHOR | 6" |
| 200361 | CHINA BERRY | 7" |
| 200368 | CHAMPHOR | 7" |
| 200369 | CHAMPHOR | 7" |
| 200373 | OAK | 7" |
| 200374 | RAINTREE | 7" |
| 200357 | CHINA BERRY | 8" |
| 200363 | RAINTREE | 8" |
| 200370 | CHAMPHOR | 8" |

## LEGEND:

| | |
|---|---|
| ALF | ALUMINUM FENCE |
| BWF | BARBED WIRE FENCE |
| (C) | AS CALCULATED |
| CB | CHORD BEARING |
| CCR | CERTIFIED CORNER RECORD |
| CFX | CENTRAL FLORIDA EXPRESSWAY AUTHORITY |
| CH | CHORD LENGTH |
| CL | CENTERLINE |
| CLF | CHAIN LINK FENCE |
| CM | CONCRETE MONUMENT |
| CMD | CONCRETE MONUMENT WITH DISK |
| CMP | CORRUGATED METAL PIPE |
| CONC | CONCRETE |
| D | DELTA ANGLE |
| DB | DEED BOOK |
| DOC | DOCUMENT NUMBER |
| E | EASTING |
| ELEC | ELECTRIC |
| ELEV | ELEVATION |
| ESMT | EASEMENT |
| EOW | EDGE OF WATER |
| EOP | EDGE OF PAVEMENT |
| ERCP | ELLIPTICAL CONCRETE PIPE |
| FNC | FENCE |
| FND | FOUND |
| HDPE | HIGH-DENSITY POLYETHYLENE PIPE |
| INV | INVERT ELEVATION |
| IP | IRON PIPE |
| IR | IRON ROD |
| IRC | IRON ROD & CAP |
| L | ARC LENGTH |
| L.A. | LIMITED ACCESS |
| (M) | AS MEASURED |
| MH | MANHOLE |

| | |
|---|---|
| N | NORTHING |
| NO. | NUMBER |
| N&D | NAIL & DISK |
| NT | NON-TANGENT |
| OHW | OVERHEAD WIRES |
| OOCEA | ORLANDO-ORANGE COUNTY EXPRESSWAY AUTHORITY |
| ORB | OFFICIAL RECORDS BOOK |
| (P) | PER PLAT |
| PB | PLAT BOOK |
| PC | POINT OF CURVATURE |
| PG | PAGE |
| P.O.B. | POINT OF BEGINNING |
| P.O.C. | POINT OF COMMENCEMENT |
| PPF | PLASTIC PRIVACY FENCE |
| PRC | POINT OF REVERSE CURVATURE |
| PT | POINT OF TANGENCY |
| PVC | POLYVINYL CHLORIDE PIPE |
| R | RADIUS |
| (R) | PER RECORD |
| RCP | REINFORCED CONCRETE PIPE |
| RGE | RANGE |
| R/W | RIGHT-OF-WAY |
| SEC | SECTION |
| SR | STATE ROAD |
| TOB | TOP OF BANK |
| TOS | TOE OF SLOPE |
| TWP | TOWNSHIP |
| (TYP) | TYPICAL |
| WF | WETLAND FLAG |
| WPF | WOOD PRIVACY FENCE |

| | |
|---|---|
| TV | CABLE TELEVISION RISER |
| CB | COMMUNICATIONS BOX |
| CR | COMMUNICATIONS RISER |
| FOB | FIBER OPTIC BOX |
| FOM | FIBER OPTIC MARKER |
| PR | PHONE RISER |
| BM | BENCHMARK |
| EB | ELECTRIC BOX |
| GA | GUY ANCHOR |
| LP | LIGHT POLE |
| WUP | WOOD UTILITY POLE |
| ELM | ELECTRIC MARKER |
| GAM | GAS MARKER |
| MB | MAILBOX |
| SEM | SPOT ELEVATION MARKER |
| RWV | RECLAIMED WATER VALVE |
| TS | TRAFFIC SIGN |
| RP | REFLECTOR POST |
| SV | SEWER VALVE |
| SMH | SANITARY MANHOLE |
| DMH | STORM MANHOLE |
| OT | OAK TREE |
| PT | PALM TREE |
| PT | PINE TREE |
| FH | FIRE HYDRANT |
| WV | WATER VALVE |

## VICINITY MAP:

NOT TO SCALE

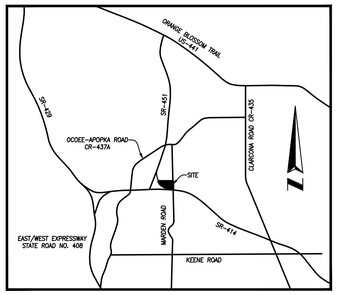


## SURVEYORS NOTES:

1. SURVEY MADE WITH BENEFIT OF ALTA COMMITMENT FOR TITLE INSURANCE BY FIRST AMERICAN TITLE INSURANCE COMPANY, FILE NO.: NCS-958347-ORL, ISSUING OFFICE FILE NUMBER: NCS-958347-ORL, COMMITMENT NUMBER: NCS-958347-ORL, BEARING A COMMITMENT DATE OF APRIL 10, 2019 AT 8:00 AM.

2. COORDINATE DATA AND HORIZONTAL ROTATION ARE RELATIVE TO FLORIDA STATE PLANE COORDINATE SYSTEM, EAST ZONE, NAD 83/90, ESTABLISHED BY STATE PLANE COORDINATES PROVIDED IN CERTIFIED CORNER RECORDS FOR SECTION CORNERS SHOWN HEREON.

3. BEARINGS SHOWN HEREON ARE BASED ON THE NORTH LINE OF THE NORTHEAST 1/4 OF SECTION 20, TOWNSHIP 21 SOUTH, RANGE 28 EAST, THAT BEARING BEING S 89°56'42" E.

4. ELEVATIONS SHOWN HEREON ARE BASED ON ORANGE COUNTY BENCHMARK "L1549006", ELEVATION=95.293. ALL ELEVATIONS ARE RELATIVE TO NAVD 88 DATUM.

5. ACCORDING TO FIRM PANEL NUMBER 12095 C 0120 F, DATED SEPTEMBER 25, 2009 THE SUBJECT PROPERTY LIES IN ZONE "X".

6. NO UNDERGROUND UTILITIES, FOUNDATIONS, OR OTHER BURIED FEATURES HAVE BEEN LOCATED BY THIS SURVEY, UNLESS OTHERWISE SHOWN.

7. ONLY TREES 6" DIAMETER AND LARGER (AT BREAST HEIGHT) ARE SHOWN BY THIS SURVEY. PLANTED PINES HAVE NOT BEEN LOCATED BY THIS SURVEY.

8. SUBJECT PROPERTY CONTAINS 6.39 ACRES, MORE OR LESS.

9. NO ADDRESS WAS OBSERVED WHILE CONDUCTING THE FIELDWORK FOR THIS SURVEY OR WAS DISCLOSED IN DOCUMENTS PROVIDED.

10. A ZONING REPORT OR LETTER HAS NOT BEEN PROVIDED FOR THIS SURVEY.

11. NAMES OF ADJOINING OWNERS ARE PER ORANGE COUNTY PROPERTY APPRAISER.

12. NO EVIDENCE OF RECENT EARTH MOVING WORK, BUILDING CONSTRUCTION, OR BUILDING ADDITIONS WAS OBSERVED IN THE PROCESS OF CONDUCTING THE FIELDWORK FOR THIS SURVEY.

13. NO INFORMATION REGARDING PROPOSED CHANGES IN STREET RIGHT OF WAY LINES WAS MADE AVAILABLE TO SURVEYOR.

14. NO EVIDENCE OF RECENT STREET OR SIDEWALK CONSTRUCTION OR REPAIRS WAS OBSERVED IN THE PROCESS OF CONDUCTING THE FIELDWORK FOR THIS SURVEY.

15. NO WETLAND MARKERS WERE OBSERVED IN THE THE PROCESS OF CONDCTING THE FIELDWORK FOR THIS SURVEY.

16. THIS SURVEY IS NOT VALID WITHOUT SIGNATURE AND RAISED SEAL OF A FLORIDA SURVEYOR AND MAPPER.

17. THIS SURVEY IS NOT VALID WITHOUT ALL SHEETS.

## SURVEY CERTIFICATION:

TO CENTRAL FLORIDA PREPARATORY SCHOOL, INC., FIRST AMERICAN TITLE INSURANCE COMPANY:

THIS IS TO CERTIFY THAT THIS MAP OR PLAT AND THE SURVEY ON WHICH IT IS BASED WERE MADE IN ACCORDANCE WITH THE 2016 MINIMUM STANDARD DETAIL REQUIREMENTS FOR ALTA/NSPS LAND TITLE SURVEYS, JOINTLY ESTABLISHED AND ADOPTED BY ALTA AND NSPS AND INCLUDES ITEMS 1, 2, 3, 4, 5, 6(A), 6(B), 7(A), 11 (LIMITED TO OBSERVED EVIDENCE COLLECTED PURSUANT TO SECTION 5.E.IV ONLY), 13, 16, 17, 18 AND 19 OF TABLE A THEREOF.

THE FIELD WORK WAS COMPLETED ON: 05/22/19

DATE OF PLAT OR MAP: 05/23/19

NOT VALID WITHOUT THE SIGNATURE AND ORIGINAL RAISED SEAL OF A FLORIDA LICENSED SURVEYOR AND MAPPER.

05/23/19 — Corey A. Hopkins, PSM 6743
DATE

| No. | Revisions | Date |
|---|---|---|
| 1 | ALTA, Topographic & Tree Survey | 05/23/19 |
| 2 | | |
| 3 | | |
| 4 | | |
| 5 | | |
| 6 | | |

ALTA / NSPS Land Title,
Topographic & Tree Survey

Marden Ridge - Lot 1
Marden Road
Apopka, Florida


On the Mark Surveying, LLC
LB 7931
143 Meadow Boulevard
Sanford, Florida 32771
Phone: (321)626-6376
Email: OTMSurveying@gmail.com


Drawn by: CAH
Checked by: CAH
Project: MARDEN RIDGE
Field Date: 05/22/19
Scale: N/A
Sheet 1 of 2

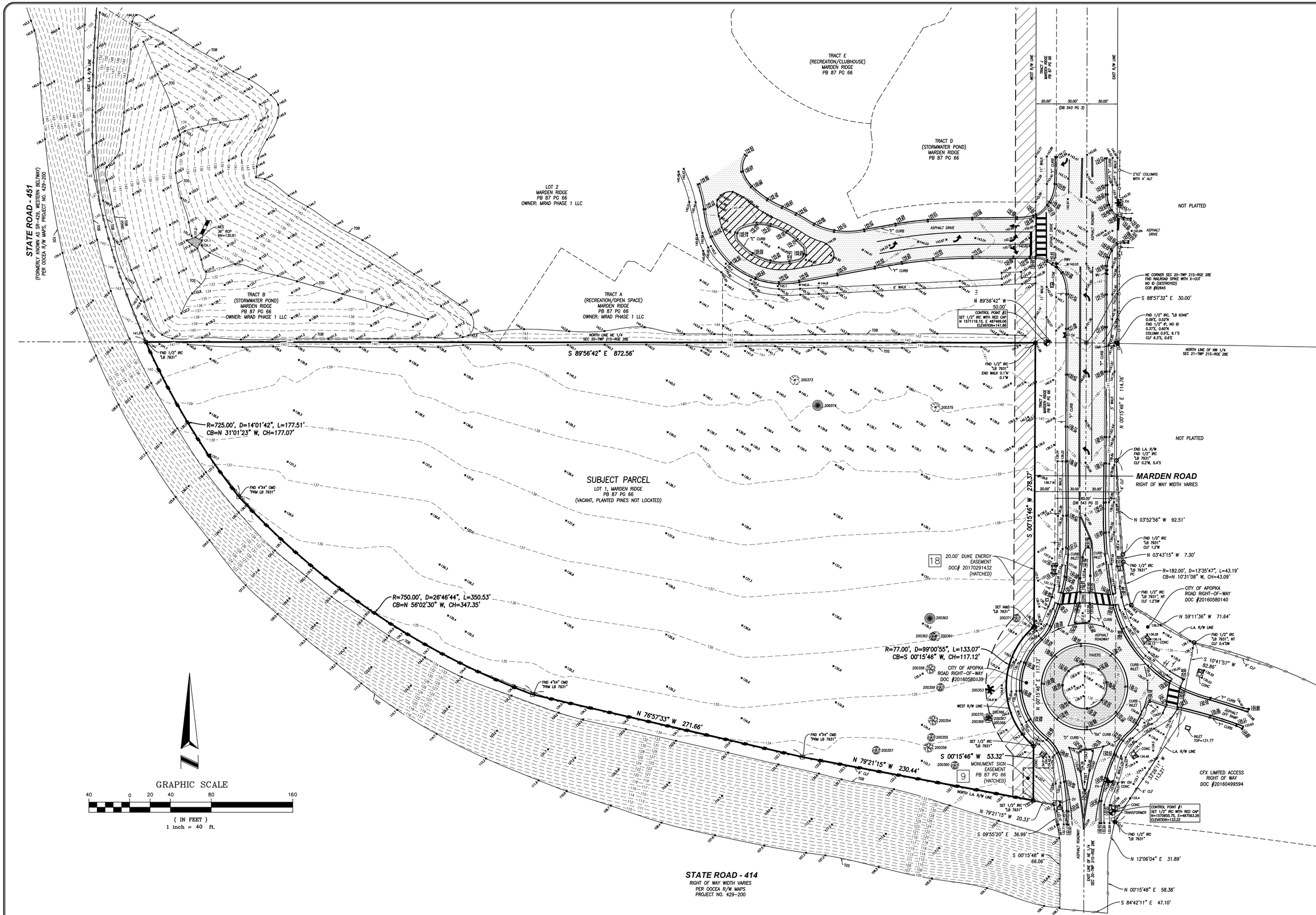


| No. | Revisions | Date |
|---|---|---|
| 1 | ALTA, Topographic & Tree Survey | 05/23/19 |
| 2 | | |
| 3 | | |
| 4 | | |
| 5 | | |
| 6 | | |

# ALTA / NSPS Land Title, Topographic & Tree Survey

## Marden Ridge - Lot 1
Marden Road
Apopka, Florida


On the Mark Surveying, LLC
LB 7931
143 Meadow Boulevard
Sanford, Florida 32771
Phone: (321)626-6376
Email: OTMSurveying@gmail.com


Drawn by: CAH

Checked by: CAH

Project: MARDEN RIDGE

Field Date: 05/22/19

Scale: 1"=40'

Sheet 2 of 2

# CITY OF APOPKA
# PLANNING COMMISSION

| | | | |
|---|---|---|---|
| X | PUBLIC HEARING | MEETING OF: | July 9, 2019 |
| | SPECIAL REPORTS | FROM: | Community Development |
| | PLAT APPROVAL | EXHIBITS: | Vicinity Map |
| X | OTHER: Special Exception | | Adjacent Future Land Use Map |
| | | | Adjacent Zoning Map |
| | | | Aerial Map |
| | | | Special Exception Site Plan |
| | | | Special Exception Lighting Plan |
| | | | Building Exterior Renderings |
| | | | Market/Need Study |
| | | | Marden Ridge PUD Ord. |

**SUBJECT:** **CENTRAL FLORIDA PREPARATORY SCHOOL SPECIAL EXCEPTION AND SPECIAL EXCEPTION SITE PLAN**

**REQUEST:** **APPROVE A SPECIAL EXCEPTION AND SPECIAL EXCEPTION SITE PLAN TO ALLOW AN ELEMENTARY, MIDDLE, AND HIGH SCHOOL IN A COMMERCIAL FUTURE LAND USE DESIGNATION**

**SUMMARY**:

| | |
|---|---|
| OWNER: | Emerson Point Associates, LLLP |
| APPLICANT: | Luke M. Classon, P.E. |
| LOCATION: | West of Marden Road & North of S.R. 414 |
| PARCEL ID NUMBER: | 17-21-28-5501-01-000 |
| LAND USE: | Commercial |
| ZONING: | Planned Development (Marden Ridge PUD) |
| EXISTING USE: | Vacant |
| PROPOSED USE: | Private Elementary, Middle, and High School |
| TRACT SIZE: | 6.39 acres +/- |
| LAND DEV. CODE: | 1993 |

**DISTRIBUTION**:

| | | |
|---|---|---|
| Mayor Nelson | Finance Director | Public Ser. Director |
| Commissioners (4) | HR Director | City Clerk |
| City Administrator Bass | IT Director | Fire Chief |
| Community Dev. Director | Police Chief | Recreation Director |

**ADDITIONAL COMMENTS:** The property is presently assigned a Future Land Use Designation of "Commercial". For the Commercial Future Land Use Designation, elementary -- pursuant to Policy3.1.i, Future Land Use Element, Apopka Comprehensive Plan (attached as an exhibit) -- elementary, middle, and high schools require an approved Special Exception. The proposed school facility is an estimated 40,000 sq. ft. for classrooms and administrative offices together with a 13,000 sq. ft. gym, amounting to a floor area ratio (FAR) of .19 and a total building floor area of approximately 53,000 sq. ft. A tot-lot is located north-adjacent of the school facility. No other outdoor recreation or athletic facility are proposed within the school site boundaries.

The development is proposed to be accessed from Marden Road via two access driveways. Upon entry of the northern driveway, vehicles will proceed to a series of drop-off lanes. The southern driveway leads to a parking area. With an estimated full time student enrollment of 600 students and 40 employees, 220 parking spaces are proposed to be provided. A 15' bufferyard is proposed at the northern property line, with the exception of the stormwater pond. A 6' masonry wall is proposed at the northern boundary of the parcel and a decorative, black, aluminum fence is proposed at western, southern, and eastern boundaries. A traffic impact analysis is required at the time of the development plan application.

A. Relationship to Adjacent Properties: Zoning and existing land use assigned to adjacent and nearby properties appears in the below exhibits. The character of the area surrounding the subject property is described as follows:

| ***Direction*** | ***Future Land Use*** | ***Zoning*** | ***Present Use*** |
|---|---|---|---|
| North (City) | Residential High | PD | Marden Ridge Apartments |
| East (City) | Commercial | C-C | Undeveloped |
| South (City) | Mixed Use | MU-ES-GT | S.R. 414 and Emerson North Townhomes |
| West (City) | Industrial | I-L | S.R. 429 and the Northwest Distribution Center (Warehousing) |

B. Special Exception Distance Separation Standard. "All special exception uses shall be located a minimum of 1,000 feet from any other existing like use in non-residential districts, and 1,500 feet in residential districts." (Article II, Section 2.00.00, 5. Special Exceptions. B1). The proposed school is more than 1,500 feet from any other private or public elementary, middle, or high school. The nearest school to te proposed private school is Phyllis Wheatley Elementary.

C. Special Exception Development Standards. Article II of the Land Development Code establishes development standards specific to special exceptions. These standards are intended to reduce any impacts from the proposed special exception use on adjacent properties. After review of the Development Plan for the Special Exception, staff finds that the applicant has met the intent of the regulations stated in Article II, Section 2.02.01 General, (5), Special Exceptions.

D. Special Exception Conditions of Use.

1. The location of driveway connections to Marden Road is approximate and shall not be determined until the development plan and associated traffic impact analysis are approved by the City.
2. A multi-use trail along Marden Road shall appear on the development plan similar to that provided within the first phase of the Marden Ridge Planned Unit Development.
3. At the time of the development plan application:

a. The drop-off zone at the west side of the building shall provide details for a pedestrian crossing system from the outer drop-off lanes to the sidewalk next to the building.

b. The parking lot and drive aisles will be designed in such a manner as to stage the maximum number vehicles possible during peak dropping off or picking up times to reduce the possibility of vehicles backing up onto Marden Road.

4. In the situation the City determines that traffic generated from the school experiences backup or safety concerns on Marden Road during school drop-off and pick-up times, the Apopka Chief of Police may require that law enforcement officer(s) be present to direct traffic. The cost to have law enforcement officers present to direct traffic at Marden Road for activities occurring at the school site shall be at the expense of the school.

5. The Special Exception applies for a private school offering education to students from pre-school through 12th grade for a maximum enrollment of 600 full-time student equivalency students. (FTE)

6. Outdoor storage or display of equipment or materials shall not be allowed.

7. School buses and vans parked overnight shall be parked in designated parking areas, designated bus lanes or special bus parking spaces denoted on the development plan.

8. Vehicles for the school or other activities occurring at the school property shall not park within the right-of-way for Marden Road, and shall not be parked on adjacent or nearby property unless approved by the property owner in a written agreement.

9. Banners, flags, or signs shall not be placed on the building or school property unless authorized through a City sign permit or as permitted by the sign code.

10. Outdoor school activities and site maintenance shall not occur between the hours of 10 p.m. and 7:00 a.m.

11. Portable buildings for classrooms or other purposes shall not be stored or used at the school property.

12. The Development Plan for the school site, including parking requirements, shall be consistent with the Land Development Code and as stipulated within the Conditions of Approval.

**DULY ADVERTISED**:

June 28, 2019 - Public Hearing Notice

---

**RECOMMENDED ACTION**:

The **Development Review Committee** recommends approval for a Special Exception and Special Exception Site Plan to allow an elementary, middle, and high school within the Commercial Future Land Use Designation, subject to the Special Exception Conditions of Use within the staff report.

**Recommended Motion:** Approve a Special Exception to allow an elementary, middle, and high school, subject to the Special Exception Conditions of Use within the staff report.

**Planning Commission Role -** Pursuant to the City of Apopka Code of Ordinances, Part III, Land Development, Article XI, Section 11.05.D.1 the Planning Commission has the authority to take final action on a special exception application. Therefore, the Planning Commission may approve, deny or approve with conditions this application. An applicant may appeal the Planning Commission action to the City Council.

**CENTRAL FLORIDA PREPARATORY SCHOOL**
**SPECIAL EXCEPTION**
**6.39 +/- Acres**
**Parcel IDs #: 17-21-28-5501-01-000**
**VICINITY MAP**

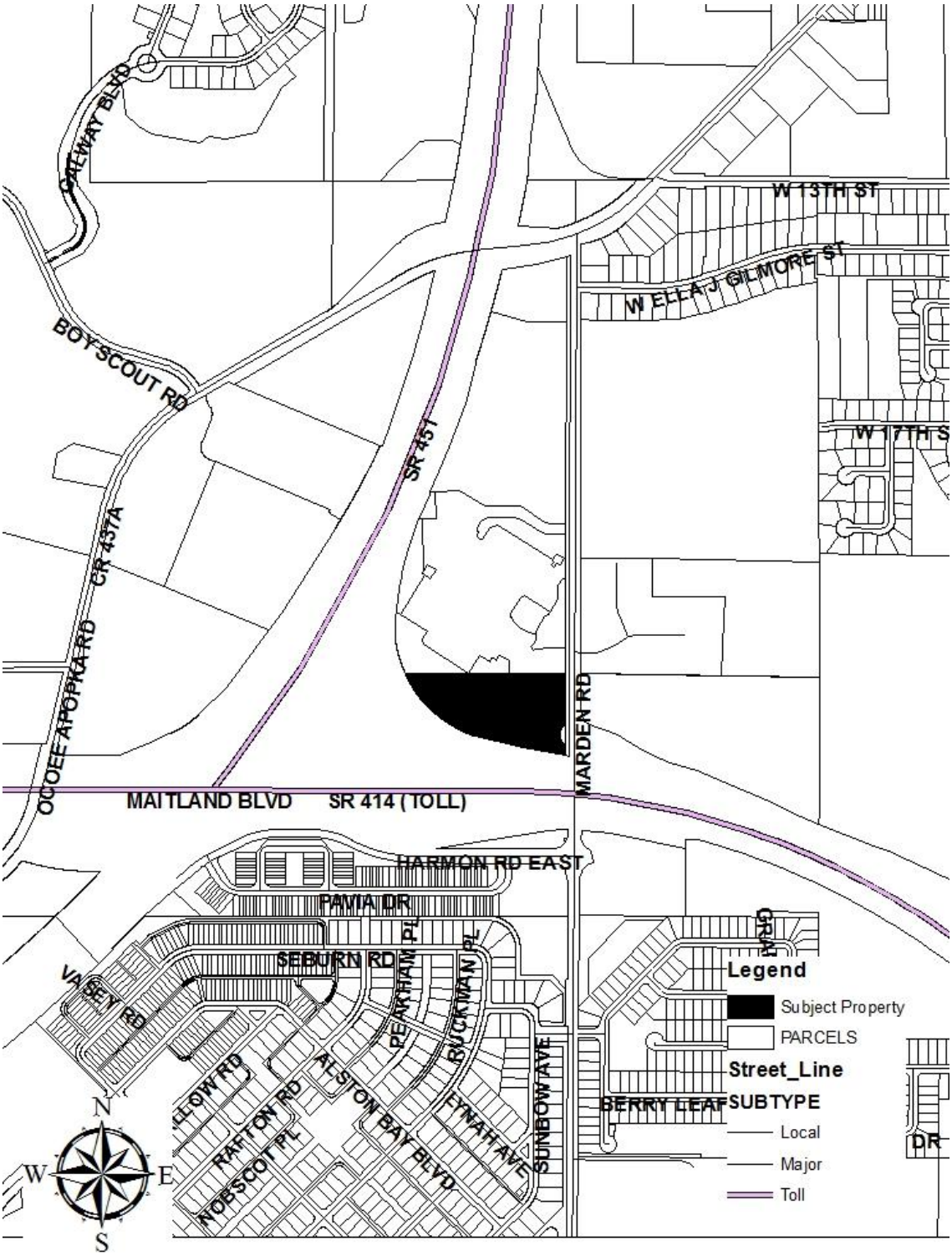

## ADJACENT FUTURE LAND USE MAP

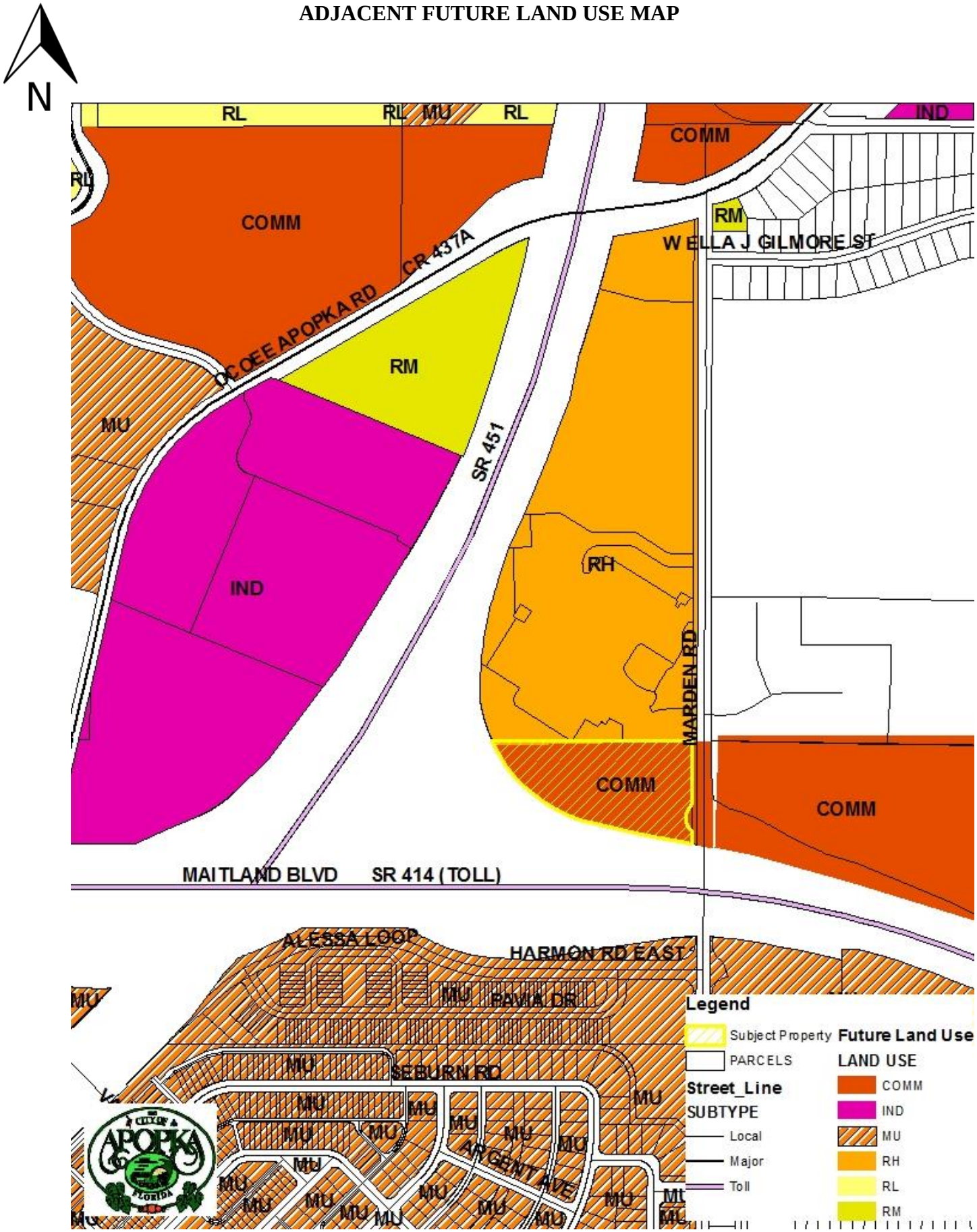

N

**ADJACENT ZONING MAP**

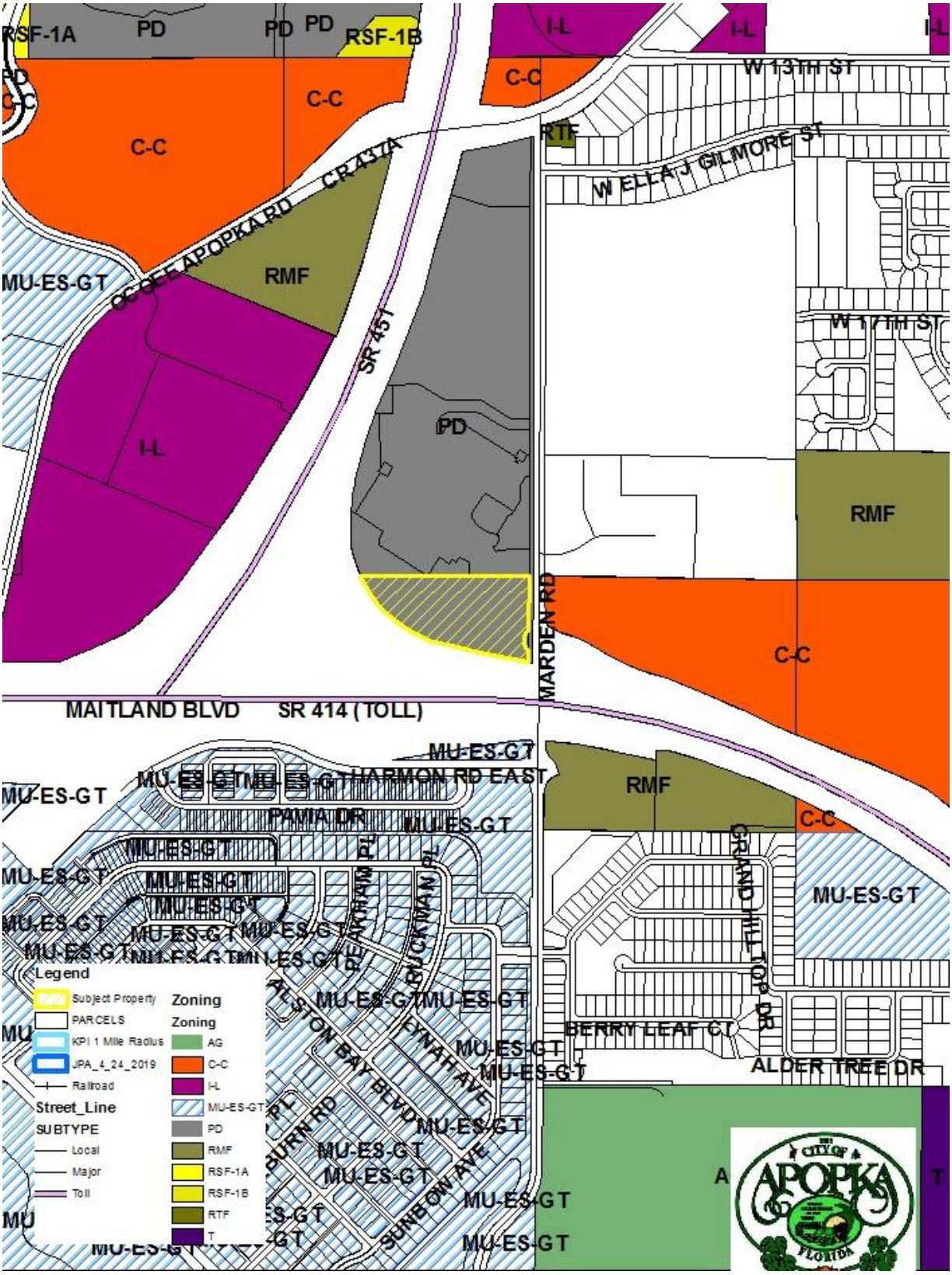

N

## ADJACENT USES

P:_PROJECT DRAWINGS\MMI-006 Central FL Preparatory School\Drawings\CAD Civil3D\Layouts\01 Exhibits\2019-05-30 - Special Exception Site Plan Revision\Special Exception Site Plan.dwg Modified:5/17/2019 By:ssierragil Plotted By:sofia sierra-gil

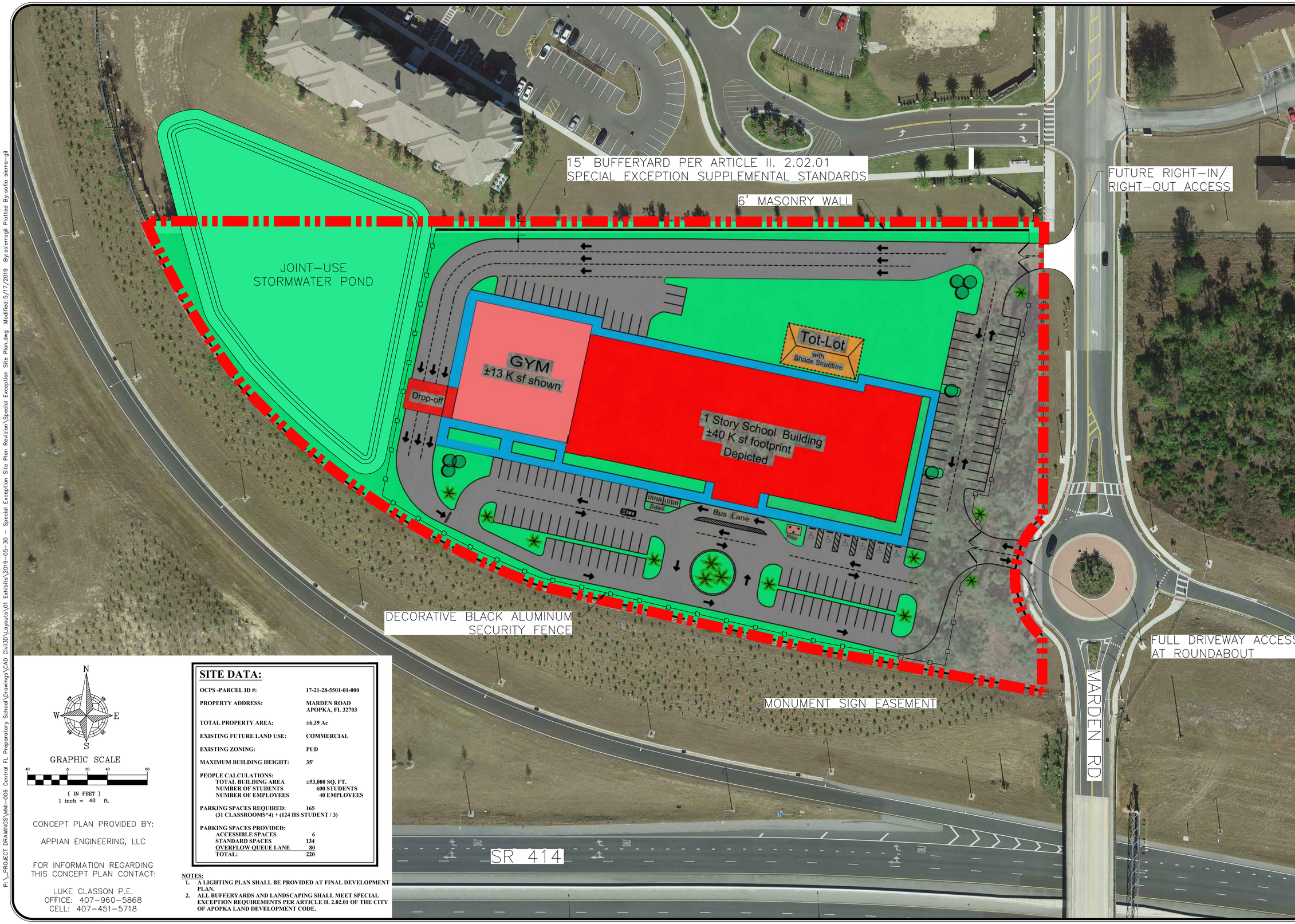


N
W E
S

GRAPHIC SCALE

40 0 20 40 80

( IN FEET )
1 inch = 40 ft.

CONCEPT PLAN PROVIDED BY:

APPIAN ENGINEERING, LLC

FOR INFORMATION REGARDING THIS CONCEPT PLAN CONTACT:

LUKE CLASSON P.E.
OFFICE: 407-960-5868
CELL: 407-451-5718

## SITE DATA:

| | |
|---|---|
| OCPS -PARCEL ID #: | 17-21-28-5501-01-000 |
| PROPERTY ADDRESS: | MARDEN ROAD<br>APOPKA, FL 32703 |
| TOTAL PROPERTY AREA: | ±6.39 Ac |
| EXISTING FUTURE LAND USE: | COMMERCIAL |
| EXISTING ZONING: | PUD |
| MAXIMUM BUILDING HEIGHT: | 35' |
| PEOPLE CALCULATIONS: | |
| TOTAL BUILDING AREA | ±53,000 SQ. FT. |
| NUMBER OF STUDENTS | 600 STUDENTS |
| NUMBER OF EMPLOYEES | 40 EMPLOYEES |
| PARKING SPACES REQUIRED: | 165 |
| (31 CLASSROOMS*4) + (124 HS STUDENT / 3) | |
| PARKING SPACES PROVIDED: | |
| ACCESSIBLE SPACES | 6 |
| STANDARD SPACES | 134 |
| OVERFLOW QUEUE LANE | 80 |
| TOTAL: | 220 |

NOTES:
1. A LIGHTING PLAN SHALL BE PROVIDED AT FINAL DEVELOPMENT PLAN.
2. ALL BUFFERYARDS AND LANDSCAPING SHALL MEET SPECIAL EXCEPTION REQUIREMENTS PER ARTICLE II. 2.02.01 OF THE CITY OF APOPKA LAND DEVELOPMENT CODE.

| REV. | DATE | DESCRIPTION | BY |
|---|---|---|---|
| | | | |

CIVIL ENGINEERING | LAND PLANNING
APPIAN ENGINEERING LLC.
APPIANFL.COM • 407.960.5868
2221 Lee Road, Suite 17, Winter Park, Florida 32789
STATE OF FLORIDA CERTIFICATE OF AUTHORIZATION NO. 32376

SPECIAL EXCEPTION SITE PLAN
MARDEN RIDGE LOT 1

CENTRAL FLORIDA PREP SCHOOL
CITY OF APOPKA, FLORIDA

DRAWN: S. SIERRA-GIL
DESIGNED: L. CLASSON
CHECKED: L. CLASSON
DATE: 5/30/2019
SCALE 1" = 40'
PROJECT MMI-006
SHEET C1.0

NOT FOR CONSTRUCTION
5/30/19

# CITY OF APOPKA
# PLANNING COMMISSION

| | | | |
|---|---|---|---|
| X | PUBLIC HEARING | MEETING OF: | October 8, 2019 |
| | SITE PLAN | FROM: | Community Development |
| | SPECIAL REPORTS | EXHIBITS: | Vicinity Map |
| X | OTHER: Major Development Plan | | Major Development Plan |
| | | | Development Agreement |

**SUBJECT:** **HAMRICK ESTATES – MAJOR DEVELOPMENT PLAN**

**REQUEST:** **RECOMMEND APPROVAL OF THE HAMRICK ESTATES MAJOR DEVELOPMENT PLAN**

**SUMMARY:**

| | |
|---|---|
| OWNER: | Wekiva Pointe, LLC, Annette L. Peck Trust |
| APPLICANT: | Geoffrey L. Summitt, P.E. |
| LOCATION: | 3220 Pittman Road |
| PARCEL ID NUMBERS: | 20-20-28-0000-00-022; 21-20-28-0000-00-019; 29-20-28-0000-00-021 |
| EXISTING USE: | Vacant |
| FLUM DESIGNATION: | Current - Residential Estate (1 du/ac), Mixed-Use (10du/ac – superseded by Future Land Use Element Policy 3.5 which permits no more than 2 du/ac north of Ponkan Road)<br><br>Proposed – Very Low Density Suburban Residential (2 du/ac, adoption hearing scheduled for November 6, 2019 City Council meeting), Mixed-Use (10du/ac – superseded by Future Land Use Element Policy 3.5 which permits no more than 2 du/ac north of Ponkan Road) |
| CURRENT ZONING: | RSF-1A (Residential Single-Family Estate), MU-ES-GT (Mixed Use-East Shore-Gateway) |
| PROPOSED DEVELOPMENT: | 111 Single-Family detached residential lots |
| TRACT SIZE: | 55.50 +/- acres |
| APPLICABLE LDC: | 2019 Land Development Code |

**DISTRIBUTION**

| | | |
|---|---|---|
| Mayor Nelson | Finance Director | Public Services Director |
| Commissioners | HR Director | Recreation Director |
| City Administrator | IT Director | City Clerk |
| Community Development Director | Police Chief | Fire Chief |

**RELATIONSHIP TO ADJACENT PROPERTIES:**

| ***Direction*** | ***Future Land Use*** | ***Zoning*** | ***Present Use*** |
|---|---|---|---|
| North | "City" Residential Estate (1 du/ac)<br>"County" Rural (1du/10 ac) | "City" PD (Planned Development), "County" A-1 (Agriculture) | Rock Springs Ridge subdivision, Vacant property |
| East | "City" Residential Estate (1 du/ac) | "City" PD (Planned Development) | Rock Springs Ridge subdivision |
| South | "City" Mixed-Use (0-10 du/ac, superseded by Future Land Use Element Policy 3.5 which permits no more than 2 du/ac north of Ponkan Road) | "City" Mixed-Use-East-Shore Gateway (MU-ES-GT) | Vacant property |
| West | "City" Residential Estate (1 du/ac), Mixed-Use (0-10 du/ac, superseded by Future Land Use Element Policy 3.5 which permits no more than 2 du/ac north of Ponkan Road),<br><br>"County" Rural (1du/10 ac) | "City" RSF-1A (Residential Single-Family Estate), "County" A-1 (Agriculture) | Vacant property |

Project Use: The applicant has submitted a Major Development Plan detailing the development of 111 single-family detached units on 55.50 acres that is proposed to be developed in two phases. The subject property is located west of Mt. Stirling Avenue, east of Pittman Road, and north of Ponkan Road. The property has two zoning designations, RSF-1A (Residential Single-Family Estate) and MU-ES-GT (Mixed Use-East Shore-Gateway). The purpose of the RSF-1A: Residential Single-Family Estate district is to provide lands that accommodate primarily medium-density, single-family detached dwellings on lots with a minimum lot area of 12,500 square feet per dwelling unit. Development standards in the RSF-1A zoning district are as follows:

**Minimum Zoning Standards RSF-1A--**

| | |
|---|---|
| Lot area, min. (sf) | 12,500 |
| Living area, min. (sf per unit) | 1,800 |
| Lot width, min. (ft) | 95 |
| Front yard setback, min. and max. (ft) | 25 |
| Side yard setback, min. (ft) | 10 |
| Corner side yard/Double front setback, min. (ft) | 25 |
| Rear yard setback, min. (ft) | 25 |
| Building height, max. (ft) | 35 |

The purpose of the MU-ES-GT: Mixed-Use East Shore-Gateway subdistrict is to have uses that are more suburban in character but are developed in a more walkable and pedestrian-friendly form. Development standards in the MU-ES-GT zoning district are as follows:

**Minimum Zoning Standards UM-ES-GT--**

| | |
|---|---|
| Lot area, min. (sf) | 7,500 |
| Living area, min. (sf per unit) | 1,350 |
| Lot width, min. (ft) | 70 |
| Front yard setback, min. and max. (ft) | 25 min |
| Side yard setback, min. (ft) | 7.5 |
| Corner side yard setback, min. (ft) | 20 |
| Rear yard setback, min. (ft) | 25 |
| Building height, max. (ft) | 35 |

**Development Plan--** The applicant is proposing the following development standards for the project as detailed on the Major Development Plan:

| | | | |
|---|---|---|---|
| No. of residential lots: | | 111 | single family homes |
| Minimum lot width: | | 70-feet - MU-ES-GT zoned lots, 95-feet - RSF-1A zoned lots | |
| Minimum lot size: | | 12,500<br>7,500 | square feet RSF-1A zoned lots<br>square feet MU-ES-GT zoned lots |
| Typical lot size: | | 12,825<br>8,400 | square feet RSF-1A zoned lots<br>square feet MU-ES-GT zoned lots |
| Minimum living area: | | 1,800 | square feet, entire project |
| | | | |
| Setbacks: | | | |
| | Front: | 25-feet, entire project | |
| | Rear: | 25-feet, entire project | |
| | Side: | 10-feet, entire project | |
| | Corner side yard: | 25-feet, entire project | |
| Proposed Density: | | 2 du/ac | |

Development of the entire property is subject to Comprehensive Plan, Future Land Use Element Policy 3.5, which permits no more than 2 dwelling units per acre for all development located north of Ponkan Road. Development of the northern portion of the property (known as the Hamrick property) is subject to the requirements of a Development Agreement dated April 15, 2019.

Access: The subject property is proposed to be accessed via Pittman Road, a 60-foot wide right-of-way, which connects to Ponkan Road. Improvements will be required to be made to Pittman Road which will be permitted separately and detailed within a separate plan set. All lots within the subdivision will be accessed via two internal roadways that will be dedicated to the City of Apopka. A stubout is proposed to the south of lot 67 to allow future connection to the property to the east at such time it develops. This property is not located within the Rock Springs Ridge subdivision. Per Section 2.a of the Development Agreement dated April 15, 2019, no vehicular connection will be provided onto Mt. Stirling Avenue, a public right-of-way which is located to the east of the subject property within the Rock Springs Ridge subdivision.

Transportation: A Traffic Impact Analysis (TIA) was submitted for this project that assessed the impacts on the transportation facilities within one mile of the site. The project is anticipated to generate 1,144 Da trips and 112 PM Peak Hour net new trips. The following roadway segments were analyzed for capacity

the study: Ponkan Road from Plymouth Sorrento Road to Vick Road and Vick Road to Rock Springs Road; and Vick Road from Lester Road from Ponkan Road. The roadway segment analysis demonstrates sufficient capacity exists on all roadways to accommodate the addition of trips generated by this project.

The intersections of Vick Road and Ponkan Road, Ponkan Road and Rock Springs Road, and Vick Road and Old Dixie Highway, along with the site access at Pittman Road were analyzed for existing and future conditions for the PM Peak Hour. The analysis shows that the study intersections are currently operating satisfactorily and will continue to operate at a satisfactory LOS in the projected conditions.

The intersection of Ponkan Road and Pittman Road was also analyzed for stopping sight distance. Based on this analysis and consultation with Orange County (Ponkan Road is owned and maintained by Orange County), it was determined that the intersection of Ponkan Road and Pittman Road should be modified from the split connection that currently exists to one access point. Modifications to the sidewalk and cross walk are required as part of the intersection modification. Also, an advanced warning sign with a flashing beacon and rumble strips should be installed on Ponkan Road for the westbound approach. These improvements will provide sufficient sight distance and advanced warning for drivers.

Stormwater: Two tracts for stormwater retention, noted as Tracts "F" and "H" are located in the northern and central portion of the site. The retention ponds are located in tracts that are owned and maintained by the homeowners association with easements that are dedicated to the City of Apopka. Per Table 5.4.5 of the Land Development Code, up to 75-percent of the land area occupied by the stormwater management facility counts toward the required open space.

Recreation/Open Space/Buffer Program: Per Section 2.b of the Development Agreement, a 25-foot wide landscape buffer will be preserved adjacent to the Rock Springs Ridge subdivision that is located within a tract that is owned and maintained by the homeowners association with an easement dedicated to the City of Apopka. Per the Development Agreement, the existing trees will be preserved as much as possible and included as part of the required landscaping for the project.

Per Table 5.4.5 of the Land Development Code, 20-percent of the site is required to be preserved as open space. The Major Development Plan reserves 24-percent of the site as open space. Pursuant to the requirements of the Land Development Code, active and passive recreational elements are provided. A tot lot is provided as an active recreational amenity. Passive recreational areas are provided within the above referenced tree save area located on the eastern portion of the property. Additional passive recreational areas are located within the stormwater management facilities that are noted within Tracts "F" and "H", a 0.20 acre open space area noted as Tract "B", a 0.40 acre open space area noted as Tract "C", and a 7.77 acre open space area noted on the Major Development Plan as Tract "D". Tract "E" is noted as a perimeter open space tract that is dedicated to the homeowners association with an easement dedicated to the City of Apopka. Per the Land Development Code, this area is permitted to count toward passive open space.

Development Agreement - The below conditions set forth in the Land Development Agreement for Hamrick Property Future Land Use Amendment – Ordinance No. 2690 are applicable to the Major Development Plan:

1. The project shall not provide any vehicular connection to Mt. Stirling Avenue for use by its Project residents.

2. A separate landscape tract on the east side of the project adjacent to Rock Springs Ridge subdivisi shall be a minimum of twenty-five (25.0) feet and landscaped in accordance with the City LDC w

trees and shrubs. As much as possible, the existing trees on the east side of the project adjacent to Rock Springs Ridge subdivision will be preserved and included as part of said landscape.

3. The City hereby agrees and accepts any such utilities connection points along the Mt. Stirling Avenue side of the Project as sufficient and approved for the Property.

4. At the request of the City, the Developer may have to perform certain off-site improvements to Pittman Road. Accordingly, the City agrees that any such off-site improvements to Pittman Road shall be undertaken within the existing right-of-way boundaries for Pittman Road and shall qualify for the City's impact fee credits. The City hereby agrees to acquire the ownership and maintenance obligations for Pittman Road once reconstruction has been completed and accepted by the City for primary access to the project and upon the Developer's execution and delivery of this Agreement.

**SCHOOL CAPACITY REPORT:** The applicant will be required to obtain from Orange County Public Schools (OCPS) a Capacity Enhancement Agreement (CEA) and Concurrency Management Agreement (CMA) prior to approval of a Construction Site Plan or as set forth in the Amended Development Agreement.

**ORANGE COUNTY NOTIFICATION:** The County was notified at the time of the subdivision plan for this property through the DRC agenda distribution.

**COMMUNITY MEETING:** Pursuant to Section 2.4.2 of the Land Development Code, a Community Meeting was held on July 25, 2019 which the Major Development Plan was presented to the surrounding property owners.

**PUBLIC HEARING SCHEDULE:**
October 8, 2019 - Planning Commission, 5:30 pm
November 6, 2019 - City Council, 1:30 pm (tentative)

---

**RECOMMENDATION ACTION:**

The **Development Review Committee** finds the Major Development Plan consistent with the Land Development Code and recommends approval of the Hamrick Estates Major Development Plan.

**Recommended Motion**: Find the Major Development Plan consistent with the Land Development Code, and recommend approval of the Hamrick Estates Major Development Plan subject to City Council approving an Amended Development Agreement and completion of the School Capacity Enhancement Agreement (CEA) and Concurrency Management Agreement (CMA) process.

**Planning Commission Role:** The role of the Planning Commission for this development application is to advise the City Council to approve or deny based on consistency with the Comprehensive Plan and Land Development Code.

**Note: This item is considered quasi-judicial. The staff report and its findings are to be incorporated into and made a part of the minutes of this meeting.**

**Project:** HAMRICK ESTATES
**Owned by:** Wekiva Pointe, LLC, Annette L. Peck Trust
**Located:** South of Peterson Road and east of SR 429 and north of Clearwater Lake
**Parcel ID#:** 20-20-28-0000-00-022, 29-20-28-0000-00-021, 21-20-28-0000-00-019

# VICINITY MAP

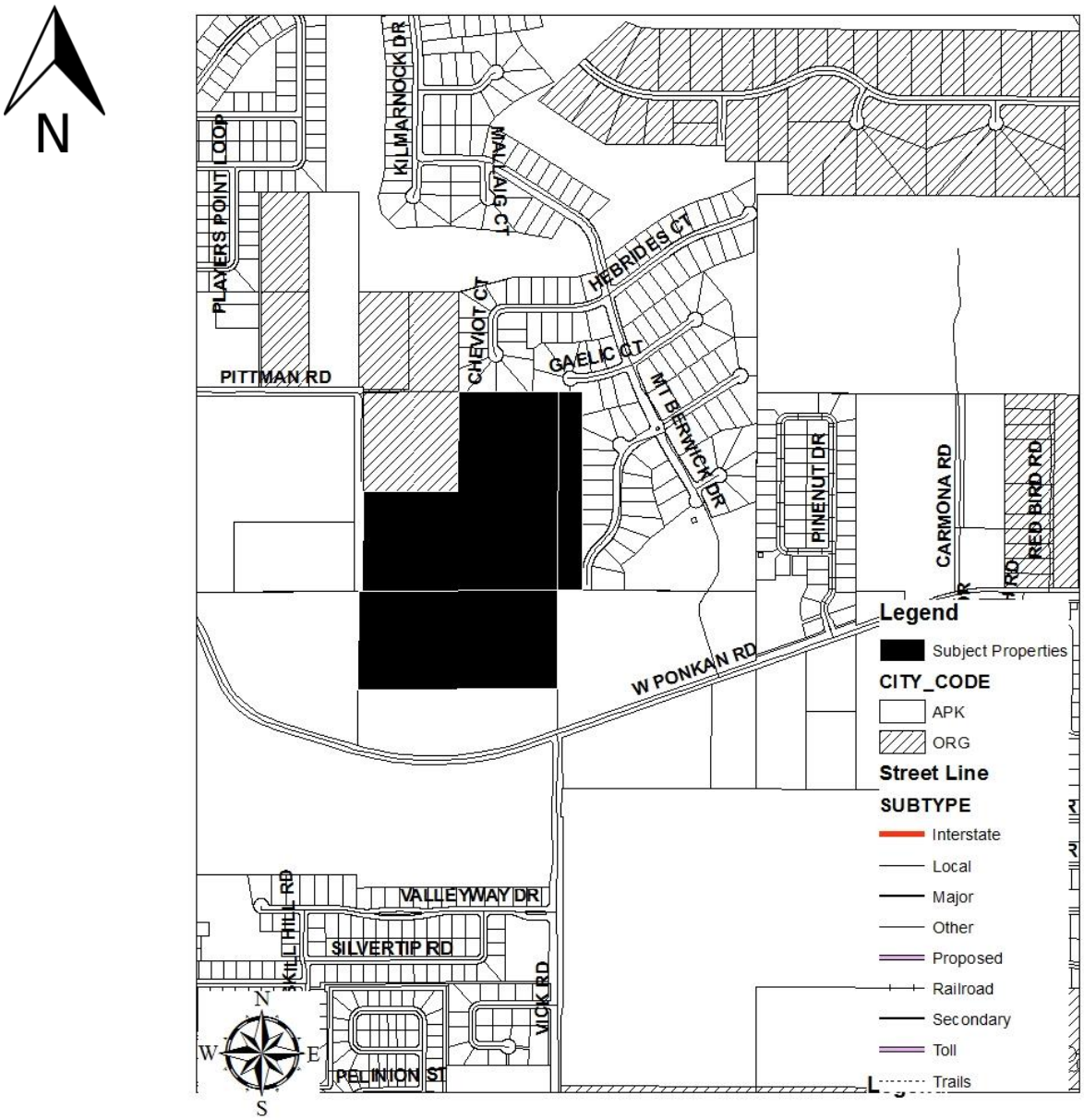

# Hamrick Estates
# Major Development Plan

## City of Apopka Florida Parcel I.D. # 20-20-28-0000-00-022, 019
## 28-20-28-0000-00-021

for

# PMDW Ventures, LLC

NOTE:

1. THE CONTRACTOR SHALL INSTALL, AS PART OF THE INFRASTRUCTURE AND PRIOR TO CERTIFICATE OF COMPLETION, DROP CURBS AND HANDICAP RAMPS AT ALL INTERSECTIONS OF THE SIDEWALK WITH THE PROPOSED PAVEMENT TO MEET CITY OF APOPKA AND A.D.A. SPECIFICATIONS.
2. THESE CONSTRUCTION PLANS WERE PREPARED IN ACCORDANCE WITH THE MANUAL OF UNIFORM STANDARDS FOR DESIGN, CONSTRUCTION AND MAINTENANCE FOR STREETS AND HIGHWAYS, FDOT GREEN BOOK AND CITY OF APOPKA REGULATIONS & SPECIFICATIONS.
3. THIS PROJECT IS SUBJECT TO AN EXISTING DEVELOPER'S AGREEMENT APPROVED AS PART OF THE COMPREHENSIVE PLAN AMENDMENT PROCESS.

by

G L SUMMITT
ENGINEERING INC

### Project Team

**Owner**
Carrol M. Hamrick
51 W Oak St.
Apopka, FL 32703
Ph:
Fx:

**Owner**
Annette L. Peck Trust
C/O Roger Peck, Trustee
5720 W 85th Terrace
Overland Park, KS 66207
Ph:
Fx:

**Developer**
PMDW Ventures, LLC
6 AMBROSE LANE
SOUTH BARRINGTON, IL
600100000
Ph:
Fx:

**Surveyor**
Cavone, Inc. Surveyors and Mappers
300 South Ronald Reagan Blvd.
Longwood, FL 32750
Ph: (407) 830-9080
Fx: (407) 339-3636

**Civil Engineer**
G L Summitt Engineering, Inc.
3667 Simonton Place
Lake Mary, FL 32746
Ph: (407) 323-0705
Fx: (407) 992-8650

**Landscape Architect**
Ravensdale Planning & Design, Inc.
3208-C E. Colonial Dr.
#294
Orlando, FL 32803
Ph: (407) 647-1213
Fx:

### Utilities

**Drinking Water**
City of Apopka
748 E. Cleveland St.
Apopka, FL 32703
Ph: (407) 703-1731
Fx: (407) 703-1748

**Sanitary Sewer**
City of Apopka
748 E. Cleveland St.
Apopka, FL 32703
Ph: (407) 703-1731
Fx: (407) 703-1748

**Garbage Disposal**
City of Apopka
748 E. Cleveland St.
Apopka, FL 32703
Ph: (407) 703-1731
Fx: (407) 703-1748

**Reclaim Water**
City of Apopka
748 E. Cleveland St.
Apopka, FL 32703
Ph: (407) 703-1731
Fx: (407) 703-1748

**Electric Service**
Florida Power & Light
2626 W S.R. 46
Sanford, FL 32771
Ph: (407) 328-1909

**Phone Provider**
AT&T
1227 S. Division Ave.
Orlando, FL 34805
Ph: (407) 351-7100

**Cable Provider**
Spectrum Networks
100 Gordon St.
Sanford, FL 32771
Ph: (321) 805-3081

### Vicinity Map

STR: 20,28, 20S, 28E 1" = 1,500'

### Drawing Index

| No. | Title | Revised |
|---|---|---|
| 1 | Coversheet | 07-15-19 |
| 2 | Symbols & Abbreviations | 07-15-19 |
| 3 | Boundary & Topo Survey | 07-15-19 |
| 4 | Overall Site Plan | 07-15-19 |
| 5 | Open Space Rec. Plan | 07-15-19 |
| 6-7 | Detailed Site Plan(s) | 07-15-19 |
| 8-9 | Utility Plan(s) | 07-15-19 |
| 10-11 | Drainage & Grading Plan(s) | 07-15-19 |
| 12-13 | Landscape Plan(s) | 07-15-19 |
| 14 | Landscape Details | 07-15-19 |
| 15 | General Details | 07-15-19 |


G L SUMMITT
ENGINEERING INC
Office: Lake Mary
3667 Simonton Place
Lake Mary, Florida 32746
phone: 407-323-0705
fax: 407-992-8650
www.GLSeng.com


PMDW Ventures, LLC
6 Ambrose Lane
South Barrington, IL 60001

Hamrick Estates
Gardens Subdivision
City of Apopka, Florida

**Major**
Development Plan

Coversheet

Plans not valid unless Signed, Dated and Sealed below.

This item has been electronically signed and sealed by Geoffrey L. Summitt PE using a Digital Signature. Printed Copies of this document are not considered signed and sealed and the signature must be verified on any electronic copies.

GEOFFREY LEE SUMMITT
LICENSE No. 39665
STATE OF FLORIDA
PROFESSIONAL ENGINEER

Geoffrey L. Summitt PE
FL Registration #39665
Certificate of Authorization #29665

Geoffrey L Summitt
2019.07.16 11:14:43 -04'00'

| No. | DATE | DESCRIPTION |
|---|---|---|
| 1 | | |
| 2 | | |
| 3 | | |
| 4 | | |
| 5 | | |
| 6 | | |
| 7 | | |
| 8 | | |
| 9 | | |
| 10 | | |

SHEET NUMBER
1 OF 15

# ABBREVIATIONS

## A

| | |
|---|---|
| A | AREA |
| AB | ANCHOR BOLT |
| ABD | ABANDON(ED) |
| AC | ACRE(S) |
| AC-FT | ACRE FOOT/FEET |
| ACP | ASBESTOS CEMENT PIPE |
| ADDL | ADDITIONAL |
| ADT | AVERAGE DAILY TRAFFIC |
| AL | ALUMINUM |
| ALT | ALTERNATE |
| AM | BEFORE NOON |
| AMP | AMPERE(S) |
| APPROX | APPROXIMATE |
| ARV | AIR RELEASE VALVE |
| ARVV | AIR RELEASE VACUUM VALVE |
| ASPH | ASPHALT |
| ASSY | ASSEMBLY |
| AVE | AVENUE |
| AVG | AVERAGE |
| AZ | AZIMUTH |

## B

| | |
|---|---|
| BFP | BACKFLOW PREVENTER |
| BL | BASELINE |
| BLDG | BUILDING |
| BLVD | BOULEVARD |
| BM | BENCH MARK |
| BND | BOUNDARY |
| BO | BLOWOFF |
| BOC | BACK OF CURB |
| BOT | BOTTOM |
| BRG | BEARING |
| BS | BOTTOM OF SLOPE |
| BV | BUTTERFLY VALVE |

## C

| | |
|---|---|
| CAP | CAPACITY |
| CB | CATCH BASIN |
| CC | CENTER TO CENTER |
| CEM | CEMENT |
| CF | CUBIC FEET |
| CFM | CUBIC FEET PER MINUTE |
| CFS | CUBIC FEET PER SECOND |
| C&G | CURB AND GUTTER |
| CI | CAST IRON |
| CIP | CAST IRON PIPE |
| CJ | CONSTRUCTION JOINT |
| C/L | CENTER LINE |
| CLP | CONCRETE LIGHT POLE |
| CLR | CLEAR/CLEARANCE |
| CLS | CLASS |
| CM | CONCRETE MONUMENT |
| CMP | CORRUGATED METAL PIPE |
| CMPA | CORRUGATED METAL PIPE ARCH |
| CND | CONDUIT |
| CO. | COUNTY |
| CO | CLEANOUT |
| COL | COLUMN |
| COMP | COMPLETE |
| CONC | CONCRETE |
| CONN | CONNECTION |
| CONST | CONSTRUCT(ION) |
| CONT | CONTINUOUS |
| COORD | COORDINATE(S) |
| COR | CORNER |
| CPLG | COUPLING |
| CPP | CONCRETE POWER POLE |
| CS | CONTROL STRUCTURE |
| CTG | COATING |
| CTR | CENTER |
| CTV | CABLE TELEVISION |
| CULV | CULVERT |
| CY | CUBIC YARD |
| CYL | CYLINDER |

## D

| | |
|---|---|
| DBL | DOUBLE |
| DEG OR ° | DEGREE |
| DEFL | DEFLECT(ION) |
| DEPT | DEPARTMENT |
| DET | DETAIL |
| DHWL | DESIGN HIGH WATER LEVEL |
| DI | DUCTILE IRON |
| DIA | DIAMETER |
| DIAG | DIAGONAL |
| DIM | DIMENSION |
| DIP | DUCTILE IRON PIPE |
| DISCH | DISCHARGE |
| DIST | DISTANCE |
| DMH | DROP MANHOLE |
| DN | DOWN |
| DRN | DRAIN |
| DWG | DRAWING |
| DWY | DRIVEWAY |

## E

| | |
|---|---|
| E | EAST |
| EA | EACH |
| EC | EDGE OF CONCRETE |
| ED | ENERGY DISSIPATOR |
| EF | EACH FACE |
| EFF | EFFLUENT |
| EG | EXISTING GRADE |
| E/L | EASEMENT LINE |
| ELB | ELBOW |
| ELEC | ELECTRIC |
| ELEV | ELEVATION |
| ELLIP | ELLIPSE/ELLIPTICAL |
| ENC | ENCASEMENT |
| ENG | ENGINEER(ING) |
| EOP | EDGE OF PAVEMENT |
| EQ | EQUAL/EQUATION |
| EQUIP | EQUIPMENT |
| EQUIV | EQUIVALENT |
| ESMT | EASEMENT |
| EST | ESTIMATE |
| EW | EACH WAY |
| EWL | ENDWALL |
| EXC | EXCAVATE/EXCAVATION |
| EXIST | EXISTING |
| EXP | EXPAND/EXPANSION |
| EXT | EXTEND/EXTENSION |

## F

| | |
|---|---|
| F&C | FRAME AND COVER |
| FD | FLOOR DRAIN |
| FDN | FOUNDATION |
| FDOT | FLORIDA DEPARTMENT OF TRANSPORTATION |
| FF | FINISHED FLOOR |
| FG | FINISHED GRADE |
| FH | FIRE HYDRANT |
| F&I | FURNISH AND INSTALL |
| FIG | FIGURE |
| FIN | FINISHED |
| FIT | FITTING |
| FL | FENCE LINE |
| FLR | FLOOR |
| FLEX | FLEXIBLE |
| FLG | FLANGE |
| FM | FORCE MAIN |
| FND | FOUND |
| FPH | FEET PER HOUR |
| FPM | FEET PER MINUTE |
| FPS | FEET PER SECOND |
| FT | FEET/FOOT |
| FTG | FOOTING |

## G

| | |
|---|---|
| GA | GAUGE |
| GAL | GALLON |
| GALV | GALVANIZED |
| GM | GAS MAIN |
| GPD | GALLONS PER DAY |
| GPH | GALLONS PER HOUR |
| GPM | GALLONS PER MINUTE |
| GPS | GALLONS PER SECOND |
| GR | GUARD RAIL |
| GRD | GROUND/GRADE |
| GSP | GALVANIZED STEEL PIPE |
| GV | GATE VALVE |
| GV&B | GATE VALVE AND BOX |
| GW | GUY WIRE |
| GWT | GROUND WATER TABLE |

## H

| | |
|---|---|
| HB | HOSE BIBB |
| HDPE | HIGH DENSITY POLYETHYLENE |
| HDW | HARDWARE |
| HORIZ | HORIZONTAL |
| HP | HORSEPOWER |
| HR | HOUR |
| HT | HEIGHT |
| HW | HEADWALL |
| HWL | HIGH WATER LEVEL |
| HWY | HIGHWAY |
| HYD | HYDRAULIC |

## I

| | |
|---|---|
| I-4 | INTERSTATE HIGHWAY |
| IA | INTERSECTION ANGLE |
| ID | INSIDE DIAMETER |
| IF | INSIDE FACE |
| IN | INCHES |
| INL | INLET |
| INS | INSERT |
| INST | INSTALL |
| IP | IRON PIPE |
| IR | IRON ROD |
| INT | INTERSECT/INTERSECTION |
| INV | INVERT |

## J

| | |
|---|---|
| JB | JUNCTION BOX |
| JCT | JUNCTION |
| JST | JOIST |
| JT | JOINT |

## L

| | |
|---|---|
| L | LENGTH |
| LAT | LATITUDE |
| LATL | LATERAL |
| LB | POUND |
| LF | LINEAR FEET/FOOT |
| LG | LONG |
| LIM | LIMIT(S) |
| LP | LIGHT POLE |
| LONG | LONG |
| LT | LEFT |
| LWL | LOW WATER LEVEL |

## M

| | |
|---|---|
| MAINT | MAINTENANCE |
| MATL | MATERIAL |
| MAX | MAXIMUM |
| MECH | MECHANICAL |
| ME | MITERED END |
| MFR | MANUFACTURER |
| MGD | MILLION GALLONS PER DAY |
| MH | MANHOLE |
| MHC | MANHOLE COVER |
| MHWL | MEAN HIGH WATER LEVEL |
| MIN | MINIMUM |
| MISC | MISCELLANEOUS |
| MJ | MECHANICAL JOINT |
| MLP | METAL LIGHT POLE |
| MLWL | MEAN LOW WATER LEVEL |
| MON | MONUMENT |
| MPH | MILES PER HOUR |
| MSL | MEAN SEA LEVEL |
| MTG | MOUNTING |

## N

| | |
|---|---|
| NORTH | NORTH |
| N | NORTH |
| NA | NOT APPLICABLE |
| N&C | NAIL AND CAP |
| NE | NORTHEAST |
| NG | NATURAL GROUND |
| NIC | NOT IN CONTRACT |
| NO OR # | NUMBER |
| NOM | NOMINAL |
| NTS | NOT TO SCALE |
| NW | NORTHWEST |
| NWL | NORMAL WATER LEVEL |

## O

| | |
|---|---|
| OC | ON CENTER |
| OD | OUTSIDE DIAMETER |
| OE | OR EQUAL |
| OPNG | OPENING |
| OPP | OPPOSITE |
| ORCP | OVAL REINFORCED CONCRETE PIPE |
| OS | OUTFALL STRUCTURE |
| OVFL | OVERFLOW |
| OVHD | OVERHEAD |

## P

| | |
|---|---|
| PC | POINT OF CURVATURE |
| PCC | POINT OF COMPOUND CURVATURE |
| PEP | POLYETHYLENE PIPE |
| PFGP | PROFILE GRADE POINT |
| PI | POINT OF INTERSECTION |
| P/L | PROPERTY LINE |
| POB | POINT OF BEGINNING |
| POJ | PUSH ON JOINT |
| PP | POWER POLE |
| PR | PHONE RISER |
| PRC | POINT OF REVERSE CURVATURE |
| PRESS | PRESSURE |
| PROJ | PROJECT |
| PROP | PROPOSED |
| PRVC | POINT OF REVERSE VERTICAL CURVE |
| PSF | POUNDS PER SQUARE FOOT |
| PSI | POUNDS PER SQUARE INCH |
| PT | POINT OF TANGENCY |
| PVC | POLYVINYL CHLORIDE |
| PVMT | PAVEMENT |
| PWR | POWER |

## Q

| | |
|---|---|
| Q | FLOW RATE |

## R

| | |
|---|---|
| R | RADIUS |
| RCP | REINFORCED CONCRETE PIPE |
| RCPA | REINFORCED CONCRETE PIPE ARCH |
| RD | ROAD |
| RDY | ROADWAY |
| RED | REDUCER |
| REF | REFERENCE |
| REINF | REINFORCE(D) |
| REQD | REQUIRED |
| REV | REVISE/REVISION |
| RPM | REVOLUTIONS PER MINUTE |
| RR | RAILROAD |
| RT | RIGHT |
| RV | RELIEF VALVE |
| R/W | RIGHT-OF-WAY |
| RWM | REUSE WATER MAIN |

## S

| | |
|---|---|
| S | SOUTH |
| SAN | SANITARY SEWER |
| SB | SPLASH BLOCK |
| SCH | SCHEDULE |
| SD | SIDE DRAIN |
| SDN | SHELF DRAIN |
| SE | SOUTHEAST |
| SEC | SECONDS |
| SECT | SECTION |
| SH | SHEET |
| SHGWT | SEASONAL HIGH GROUND WATER TABLE |
| SIM | SIMILAR |
| S/L | SETBACK LINE |
| SL | SLOPE |
| SM | SHEET METAL |
| SPEC | SPECIFICATION(S) |
| SQ | SQUARE |
| SQ IN | SQUARE INCH(ES) |
| SQ FT | SQUARE FOOT/FEET |
| SQ YD | SQUARE YARD(S) |
| SR | STATE ROAD |
| SS | STAINLESS STEEL |
| ST | STREET |
| STA | STATION |
| STD | STANDARD |
| STL | STEEL |
| STR | STRUCTURE |
| STS | STORM SEWER |
| SUP | SUPPORT |
| SUSP | SUSPEND/SUSPENSION |
| SVC | SERVICE |
| SW | SOUTHWEST |
| SWK | SIDEWALK |
| SYM | SYMBOL(S) |
| SYMM | SYMMETRICAL |
| SYS | SYSTEM |

## T

| | |
|---|---|
| T | TANGENT |
| TB | TURFBLOCK |
| T&B | TOP AND BOTTOM |
| TBM | TEMPORARY BENCH MARK |
| TC | TIME OF CONCENTRATION |
| TD | TRENCH DRAIN |
| TDH | TOTAL DYNAMIC HEAD |
| TECH | TECHNICIAN/TECHNICAL |
| TEMP | TEMPORARY |
| TL | TERMINAL LAMPHOLE |
| TOB | TOP OF BANK |
| TOC | TOP OF CURB |
| TOS | TOE OF SLOPE |
| TOT | TOTAL |
| TS | TOP OF SLOPE |
| TWP | TOWNSHIP |
| TYP | TYPICAL |

## U

| | |
|---|---|
| UD | UNDERDRAIN |
| UG | UNDERGROUND |
| UON | UNLESS OTHERWISE NOTED |
| UTC | UNDERGROUND TELEPHONE CABLE |

## V

| | |
|---|---|
| VB | VALVE BOX |
| VC | VERTICAL CURVE |
| VCP | VITRIFIED CLAY PIPE |
| VERT | VERTICAL |
| VPC | VERTICAL POINT OF CURVE |
| VPI | VERTICAL POINT OF INTERSECTION |
| VPT | VERTICAL POINT OF TANGENCY |

## W

| | |
|---|---|
| W | WEST |
| W/ | WITH |
| WM | WATER MAIN |
| W/O | WITHOUT |
| WP | WATER/WEATHER PROOF |
| WPP | WOOD POWER POLE |
| WS | WATER SURFACE |
| WSWT | WET SEASON WATER TABLE |
| WT | WEIGHT |
| WV | WATER VALVE |
| WWF | WELDED WIRE FABRIC |
| WWM | WELDED WIRE MESH |

## Y

| | |
|---|---|
| YD | YARD |
| YR | YEAR |

## MISC

| | |
|---|---|
| & | AND |
| @ | AT |
| Δ | DELTA |

# EXISTING SYMBOLS

## LINES

- CENTER LINE
- WIRE FENCE
- CHAIN LINK FENCE
- WOOD FENCE
- GUARDRAIL
- EXISTING PLATS
- RETAINING WALL
- R/W — RIGHT-OF-WAY LINE
- SHORELINE
- SWALE
- BUILDING LINE
- 81 / 80 — CONTOURS
- RAILROAD TRACKS
- GAS — GAS MAIN
- UE — UNDERGROUND ELECTRIC
- UGT — UNDERGROUND TELEPHONE
- OVERHEAD ELECTRIC
- OVERHEAD TELEPHONE
- CTV — UNDERGROUND CABLE TELEVISION
- EASEMENT

## SANITARY

- SANITARY SEWER LINE
- CLEANOUT
- FM — FORCE MAIN
- MANHOLE

## WATER & REUSE WATER

- 6" WM — WATER MAIN 6" PVC PIPE
- RM — REUSE WATER MAIN
- BFP — BACKFLOW PREVENTOR
- WATER VALVE
- FIRE HYDRANT
- WATER METER

## STORM DRAIN

- STORM SEWER
- MANHOLE
- MITERED END
- STORM INLET
- FDOT TYPE 6 INLET
- FDOT TYPE 1 INLET
- FDOT TYPE 2 INLET
- FDOT TYPE 3 INLET
- FDOT TYPE 4 INLET
- FDOT TYPE 5 INLET

## HIGHWAY & UTILITIES

- BENCHMARK
- RECOVERED 4x4 CM
- SET 4x4 CM
- SET IRON ROD
- RECOVERED IRON ROD
- CONCRETE
- COUNTY ROADS
- INTERSTATE ROADS
- STATE ROADS
- WOOD AND/OR METAL LIGHT POLE
- CONCRETE LIGHT POLE
- YARD LIGHT
- MISCELLANEOUS SIGN
- 16 15 / 21 22 — SECTION CORNER
- EDGE OF PAVEMENT W/O CURB
- EDGE OF PAVEMENT W/CURB
- GUY POLE
- WOOD UTILITY POLE
- CONCRETE UTILITY POLE
- ELECTRIC MANHOLE
- TELEPHONE MANHOLE
- TELEPHONE RISER
- ELECTRIC BOX / TRANSFORMER
- WELL
- MONITORING WELL
- DUMPSTER
- RR CROSSING SIGN
- RR CROSSING GATE
- TRAFFIC SIGNAL POLE
- SATALITE DISH
- GUY WIRE
- HANDICAP PARKING
- SPOT ELEVATION
- BRICK PAVERS
- DIRT ROAD
- 8" MAPLE TREE
- 8" OAK TREE
- 8" PINE TREE
- 8" PALM TREE
- 8" MISC. TREE

# PROPOSED SYMBOLS

## LINES

- BOUNDARY
- CONSERVATION SETBACK
- CENTER LINE
- CHAIN LINK FENCE
- 81 / 80 — CONTOUR
- EASEMENT
- FENCE
- GUARDRAIL
- LOT LINE
- P/L — PROPERTY LINE
- RETAINING WALL
- R/W — RIGHT-OF-WAY LINE
- SETBACK LINE
- SHORELINE
- SWALE
- TREE LINE

## SANITARY

- 100 LF SAN 8 PVC 0.40% — 100 LINEAR FEET SANITARY 8" PVC PIPE @ 0.40% SLOPE
- CLEANOUT
- DOUBLE SANITARY SERVICE
- FM — FORCE MAIN
- MANHOLE

## WATER & REUSE WATER

- WM — WATER MAIN
- 11 1/2° BEND
- 22 1/2° BEND
- 45° BEND
- 90° BEND
- TEE
- CROSS
- CHECK VALVE
- DOUBLE DETECTOR CHECK VALVE
- DOUBLE WATER SERVICE
- GATE VALVE
- FIRE HYDRANT
- M — METER
- REDUCER
- BLOWOFF
- BACKFLOW PREVENTER
- SP 2 — SAMPLE POINT
- UNDERDRAIN CEANOUT
- RM — RECLAIMED WATER MAIN
- REUSE WATER SYSTEM CONNECTION
- DOUBLE REUSE WATER SERVICE

## STORM DRAIN

- 100 LF STS 24 RCP @ 0.20% — 100 LINEAR FEET STORM PIPE 24" REINFORCED CONCRETE PIPE @ 0.20%
- UNDERDRAIN 6" PVC PIPE
- DRAINAGE FLOW DIRECTION
- FDOT INLET TYPE 1
- FDOT INLET TYPE 2
- FDOT INLET TYPE 3
- FDOT INLET TYPE 4
- FDOT INLET TYPE 5
- FDOT INLET TYPE 6
- MANHOLE
- MITERED END SECTION
- SLOPE DIRECTION ARROW FOR POND SIDE SLOPE
- 100.00 — SPOT ELEVATION
- STORM INLET

## HIGHWAY & UTILITIES

- BOUND CORNER
- CONCRETE
- COUNTY ROADS
- 901 / 24 — DETAIL REFERENCE
- DUMPSTER PAD
- FF=98.76 TYPE A — FINISHED FLOOR ELEVATION W/ FHA LOT TYPE
- GUY POLE
- HANDICAP PARKING
- INTERSTATE ROADS
- LIGHT POLE
- SIGNS
- 16 15 / 21 22 — SECTION CORNER
- STATE ROADS
- SILT FENCE
- TRAFFIC FLOW PAVEMENT MARKING
- UTILITY POLE
- BLDG OR STRUCTURE
- TYPE F CURB & GUTTER
- MIAMI CURB
- 901 / 24 — CROSS SECTION DETAIL


G L SUMMITT
ENGINEERING INC
Office: Lake Mary
3667 Simonton Place
Lake Mary, Florida 32746
phone: 407-323-0705
fax: 407-992-8650
www.GLSeng.com


REVCO

PMDW Ventures, LLC
6 Ambrose Lane
South Barrington, IL 60001

Hamrick Estates Gardens Subdivision
City of Apopka, Florida

Major Development Plan

Symbols & Abbreviations

Plans not valid unless Signed, Dated and Sealed below.

GEOFFREY L. SUMMITT, P.E.
Date: July 15, 2019
FL Registration #58775
Certificate of Authorization #29665

Revisions

| NO. | DATE | DESCRIPTION |
|---|---|---|
| 1 | | |
| 2 | | |
| 3 | | |
| 4 | | |
| 5 | | |
| 6 | | |
| 7 | | |
| 8 | | |
| 9 | | |
| 10 | | |

SHEET NUMBER
2 OF 15

*PLAT OF BOUNDARY AND TOPOGRAPHIC SURVEY FOR PMDW VENTURES, LLC*

*DESCRIPTION: The Southeast 1/4 of the Southeast 1/4 (less and except the Northwest 1/4 of the Southeast 1/4 of the Southeast 1/4), of Section 20, Township 20 South, Range 28 East, Orange County, Florida, Less Road Right of Way.*

*ALSO:*
*The North 1/2 of the Northeast 1/4 of the Northeast 1/4, Section 29, Township 20 South, Range 28 East, Orange County, Florida.*

*ALSO:*
*The West 1/8 of the Southwest 1/4 of the Southwest 1/4 of Section 21, Township 20 South, Range 28 East, Orange County, Florida.*

*CONTAINING 2,416,022 SQUARE FEET= 55.5 ACRES*

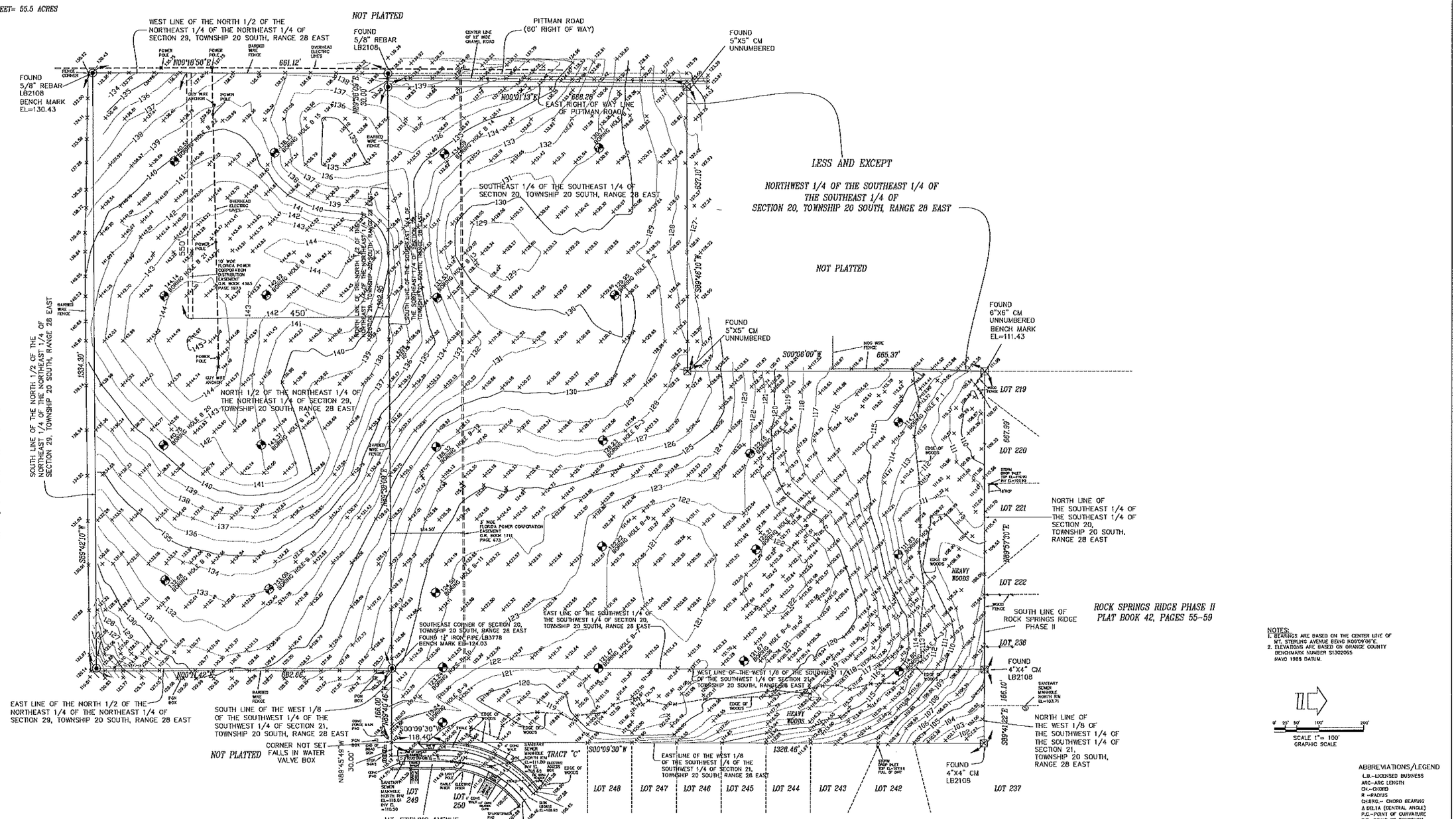


NOTES:
1. BEARINGS ARE BASED ON THE CENTER LINE OF MT. STERLING AVENUE BEING N00°09'00"E.
2. ELEVATIONS ARE BASED ON ORANGE COUNTY BENCHMARK NUMBER S1302065 NAVD 1988 DATUM.

SCALE 1"= 100'
GRAPHIC SCALE

ABBREVIATIONS/LEGEND
L.B.–LICENSED BUSINESS
ARC–ARC LENGTH
CH.–CHORD
R –RADIUS
CHBRG.– CHORD BEARING
Δ DELTA (CENTRAL ANGLE)
P.C.–POINT OF CURVATURE
P.T.– POINT OF TANGENCY
P.I.– POINT OF INTERSECTION
P.R.C.–POINT OF REVERSE CURVATURE
U.E.– UTILITY EASEMENT
℄ – CENTERLINE
CONC–CONCRETE
FFE–FINISHED FLOOR ELEVATION
BSL–BUILDING SETBACK LINE
P.B.–PLAT BOOK
FL– FLOWLINE
BC– BACK OF CURB
CM–CONCRETE MONUMENT
P.O.L.–POINT ON LINE
INV EL.– INVERT ELEVATION
EL–ELEVATION

FLOOD CERTIFICATION
BASED ON THE FEDERAL EMERGENCY MANAGEMENT AGENCY FLOOD INSURANCE RATE MAP, THESE TRACTS LIE IN ZONE "X", COMMUNITY PANEL NO. 120180 0110 F MAP REVISION DATE: SEPTEMBER 25, 2009 (SUBJECT TO CHANGE)

THIS SURVEY MEETS THE "STANDARDS OF PRACTICE" AS REQUIRED BY CHAPTER 53-17, BOARD OF PROFESSIONAL SURVEYORS AND MAPPERS, PURSUANT TO SECTION 472.027 OF THE FLORIDA STATUTES.

THE UNDERSIGNED AND CAVONE, INC. LAND SURVEYORS and MAPPERS HAVE NO REPRESENTATION OR GUARANTEES AS TO THE INFORMATION REFLECTED HEREON PERTAINING TO EASEMENTS, RIGHTS OF WAY, SETBACK LINES, AGREEMENTS AND OTHER MATTERS, AND FURTHER THIS INSTRUMENT IS NOT INTENDED TO REFLECT OR SET FORTH ALL SUCH MATTERS. SUCH INFORMATION SHOULD BE OBTAINED AND CONFIRMED BY OTHERS THROUGH APPROPRIATE TITLE VERIFICATION.

CAVONE, INC.
LAND SURVEYORS AND MAPPERS
305 SOUTH ROBINSON BOULEVARD
ORLANDO, FLORIDA 32805-5491
TELEPHONE (407) 836-8000
FACSIMILE (407) 836-8009
E-MAIL CAVONE@SPLAN.COM

THIS SURVEY NOT VALID UNLESS EMBOSSED WITH THE SIGNATURE AND SEAL OF A FLORIDA LICENSED SURVEYOR AND MAPPER
C:\cavonesign.tif

DAMIAN F. CAVONE — PRESIDENT
FLORIDA SURVEYOR & MAPPER NUMBER 3068
LICENSED BUSINESS NUMBER LB 3277

| REVISION | DATE |
|---|---|
| ADD F.P.C. EASEMENTS | 10-11-2016 |
| TOPOGRAPHIC SURVEY | 8-27-2016 |
| BOUNDARY SURVEY | 8-08-2016 |

W.O. BOUNDARY SURVEY 2016-565
W.O. TOPOGRAPHIC SURVEY 2016-612

*TREE SURVEY FOR HAMRICK ESTATES*

*DESCRIPTION: The Southeast 1/4 of the Southeast 1/4 (less and except the Northwest 1/4 of the Southeast 1/4 of the Southeast 1/4), of Section 20, Township 20 South, Range 28 East, Orange County, Florida, Less Road Right of Way.*

*ALSO:*
*The North 1/2 of the Northeast 1/4 of the Northeast 1/4, Section 29, Township 20 South, Range 28 East, Orange County, Florida.*

*ALSO:*
*The West 1/8 of the Southwest 1/4 of the Southwest 1/4 of Section 21, Township 20 South, Range 28 East, Orange County, Florida.*

*CONTAINING 2,416,022 SQUARE FEET= 55.5 ACRES*

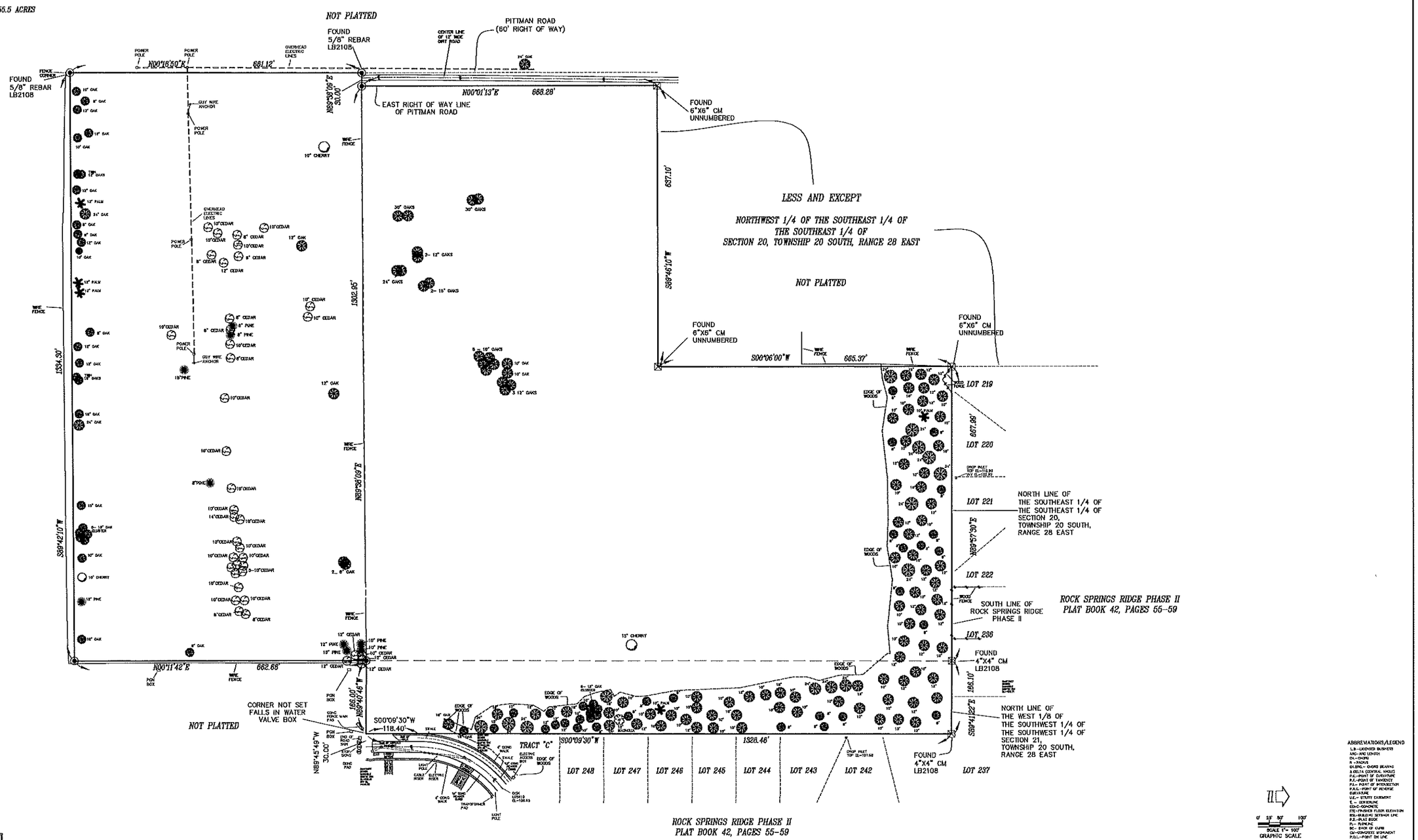

GRAPHIC SCALE

( IN FEET )
1 inch = 100 ft

FUTURE LAND USE: RURAL
ZONING: A-1 (COUNTY)
EXISTING USE: RESIDENTIAL

**TRACT TABLE**

| TRACT LABEL | TRACT TYPE | Area (Ac.) | TRACT DEDICATED TO | EASEMENT DEDICATED TO |
|---|---|---|---|---|
| - | Rights-of-Way | 6.74 | City of Apopka | |
| A | Open Space Area | 0.18 | HOA | |
| B | Open Space Area | 0.20 | HOA | |
| C | Open Space Area | 0.40 | HOA | |
| D | Open Space/Recreation Area | 7.77 | HOA | |
| E | Open Space Buffer Tract | 4.99 | HOA | City of Apopka |
| F | Retention Pond | 4.81 | HOA | City of Apopka |
| G | Open Space Tract | 0.08 | HOA | |
| H | Retention Pond | 1.86 | HOA | City of Apopka |
| I | ROW Medians | 0.02 | HOA | |

SOILS LEGEND:

USGS SOILS LINE

CHANDLER FINE SANDS 0 TO 5% SLOPES

CHANDLER FINE SANDS 5 TO 12% SLOPES

CHANDLER-APOPKA FINE SANDS 5 TO 12% SLOPES

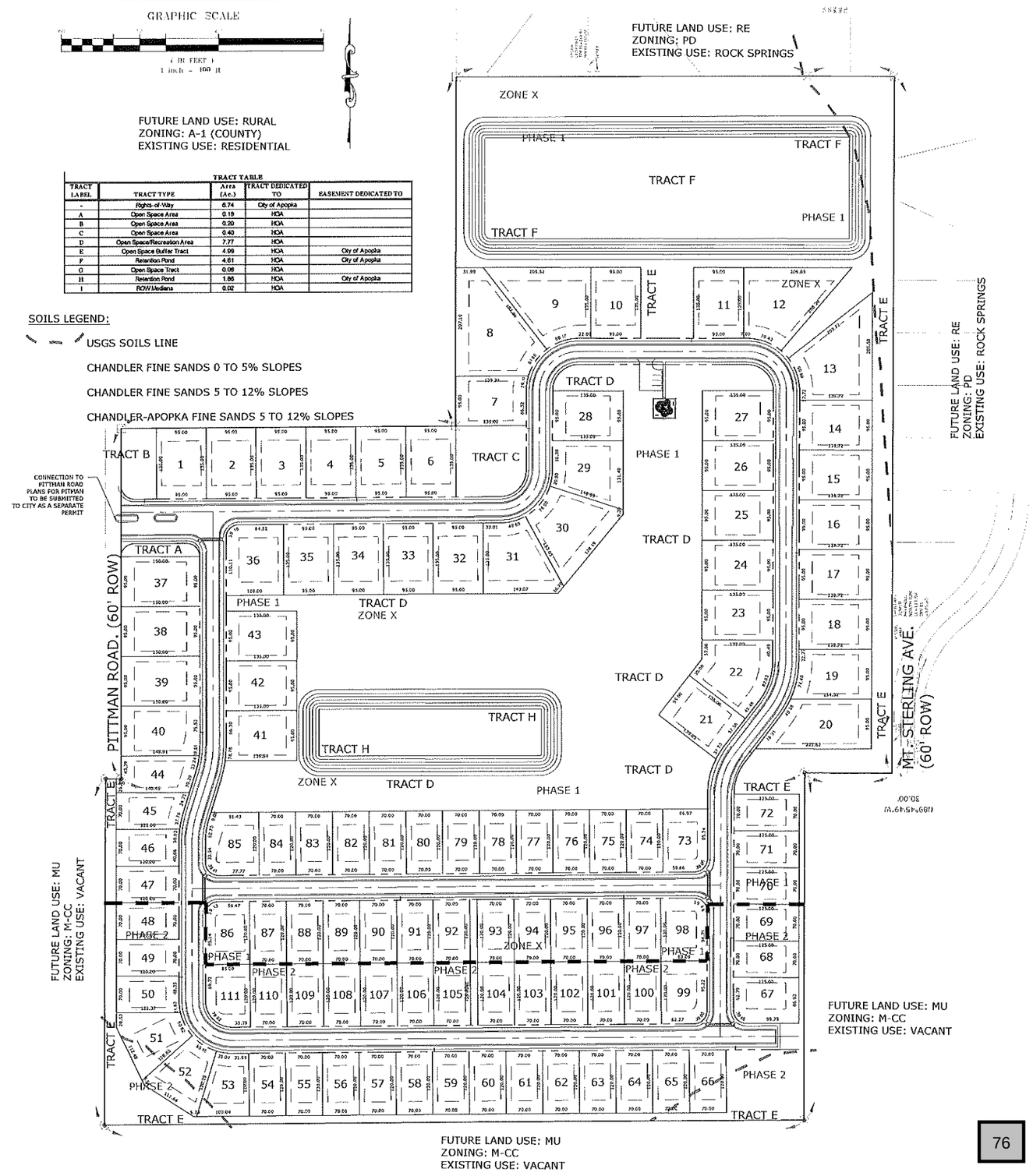


SITE DATA:

| | |
|---|---|
| Parcel I.D. #: | 20-20-28-0000-00-019, 022;28-20-28-0000-00-021 |
| Property FLU: | RLS, MU |
| Property Zoning: | RSF-1A, MU-EAST SHORE Gateway Overlay |
| Gross Land Area: | 55.50 acres |
| Lakes/Wetland Area: | 0.00 acres |
| Gross Developable Area: | 55.50 acres |
| Net Developable Area: | 55.50 acres |
| Stormwater Management Area: | 7.96 acres |
| Right-of-Way Area: | 6.74 acres |
| Right-of-Way Dedication: | 0.00 acres |
| Public Open Space Tracts: | 11.47 acres |
| Proposed Residential Units: | 111 Single-Family Detached Lots |
| Net Residential Density: | 2.00 dwelling units/Net Developable Acre |
| Minimum Living Area: | 1,800 sqft. (Heated/cooled space)RSF-1A, MU-GATEWAY |
| Maximum Building Height: | Two Stories, 35' |
| Minimum Lot Width: | 95' (RSF-1A), 70' (MU-ESG) |
| Minimum Lot Depth: | N/A |
| Minimum Lot Size: | 12,500 (RSF-1A), 7,500 (MU-ESG) |
| Maximum Lot Coverage: | 70% |
| Minimum Open Space %: | 20% |

Setbacks:

| | |
|---|---|
| Front: | 25' (RSF-1A), (MU-ESG) |
| Side: | 10.0' (RSF-1A), (MU-ESG) |
| Side Street: | 25' (RSF-1A), (MU-ESG) |
| Rear: | 25' (RSF-1A), (MU-ESG) |

Open Space Requirements:

Land Development Code (Residential 20%)
55.5ac. * .20 = 11.1 acres (required)
Open Space Provided:

| | |
|---|---|
| Tract A: | 0.18 acres |
| Tract B: | 0.20 acres |
| Tract C: | 0.40 acres |
| Tract D: | 7.77 acres |
| Tract E: | 4.99 acres |
| Tract F: | 4.81 acres |
| Tract G: | 0.08 acres |
| Tract H: | 1.86 acres |
| Total: | 20.29 acres (11.1 required) |

Major Street Setbacks:

Pittman Road. 30' (setback from right-of-way line)

Additional Notes:

1. Billboards and pole signs shall be prohibited.
2. There is no proposed 100 yr. Flood Plain encroachment.
3. All Conservation Easements associated buffers area will be owned & maintained by the HOA with a development rights Easement dedicated to the City of Apopka via plat.
4. A Homeowner's Association will be created for maintenance and ownership of common area tracts as reflected in the tract table.
5. Fire Protection will be provided by City of Apopka in accordance with the 2016 Florida Fire Prevention Code.
6. The project will be constructed in two phases as noted by the phase line.
7. All construction access to the site will be from Pittman Road. No access to this site for construction will be allowed from Mount Sterling Ave. consistent with the Developer's Agreement.

Off-Street Parking:

Required Parking:

2.0 spaces per Unit (for Single-Family Residences): (111 units x 2.0 spaces/unit) = 222

| | |
|---|---|
| Total Required Parking: | 222 |
| Provided Parking: | |
| 2 Garage Spaces per Unit: | 222 spaces |
| 2 Driveway Spaces per Unit: | 222 spaces |
| Total Parking Provided: | 444 spaces |

Phasing:

This project is to be developed in a single phase.

Traffic:

Single-Family Residential: 111 d.u. * 9.57 trip/d.u. = 1,062 A.D.T.

Stormwater Management:

The project will meet the requirements of City of Apopka Land Development Code and the St. Johns River Water Management District.

School Age Population:

111 d.u. * .478 children/unit = 53 children

Needed Fire Flow (NFF): (Based on FFPC 2012 Edition Chapter 18 & Annex I)

Single-Family (less than 5,000 sqft.): 1,000 gpm

Water, Sewer and Solid Waste Demand:

Water Demand:
111 Units * 300 gallons/day = 33,300 gallons/day

Sewer Demand:
111 Units * 280 gallons/day = 31,080 gallons/day

Solid Waste Demand:
111 Units * 2.6 persons/unit * 4.3 Lb./person/day = 1,241 Lb/day

Recreational/Open Space Demand:
111 Units * 2.6 persons/unit /1,000 * 3.0 ac/1,000 persons = 0.87 ac.

Green Building Standards Points Allocation:

- Installation of Energy Star HVAC: 0.50 points
- Orient at least 50% of the residential units within 20° of east-west axis: 1.50 points
- Installation of Paver driveways to create pervious pavement areas: 1.00 points
- Preserve 5 or more trees 20' in height & 24" DBH or greater: 1.00 points


G L SUMMITT
ENGINEERING INC
Office: Lake Mary
3667 Simonton Place
Lake Mary, Florida 32746
phone: 407-323-0705
fax: 407-992-8650
www.GLSeng.com


PMDW Ventures, LLC
6 Ambrose Lane
South Barrington, IL 60001

Hamrick Estates Gardens Subdivision
City of Apopka, Florida

# Major Development Plan

## Overall Site Plan

Plans not valid unless Signed. Dated and Sealed below.

GEOFFREY L. SUMMITT, P.E.
Date: July 15, 2019
FL Registration #58775
Certificate of Authorization #29665

Revisions

| NO. | DATE | DESCRIPTION |
|---|---|---|
| 1 | [illegible] | [illegible] |
| 2 | [illegible] | [illegible] |
| 3 | [illegible] | [illegible] |
| 4 | [illegible] | [illegible] |
| 5 | [illegible] | [illegible] |
| 6 | [illegible] | [illegible] |
| 7 | [illegible] | [illegible] |
| 8 | [illegible] | [illegible] |
| 9 | [illegible] | [illegible] |
| 10 | [illegible] | [illegible] |

SHEET NUMBER
4 OF 15

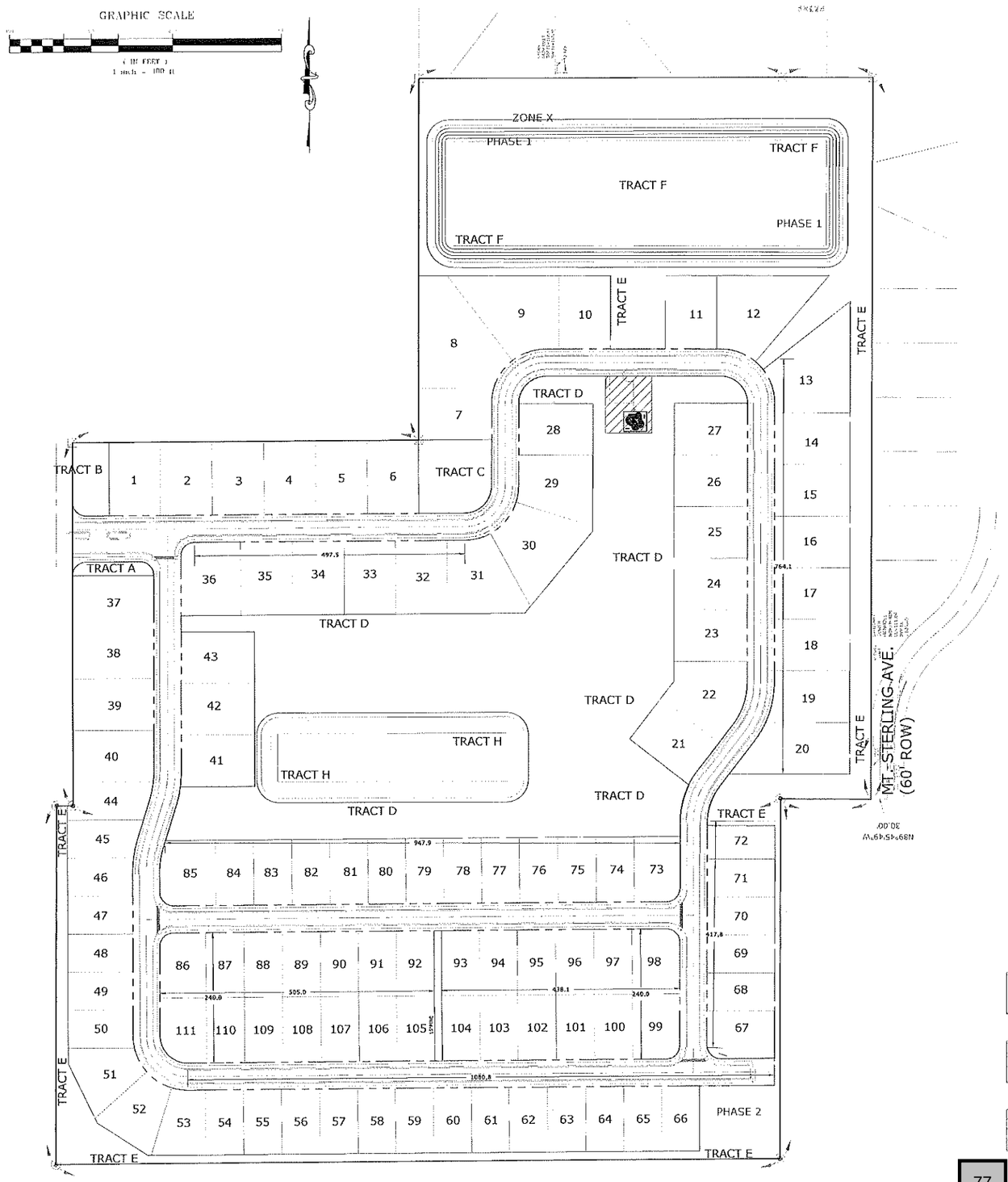


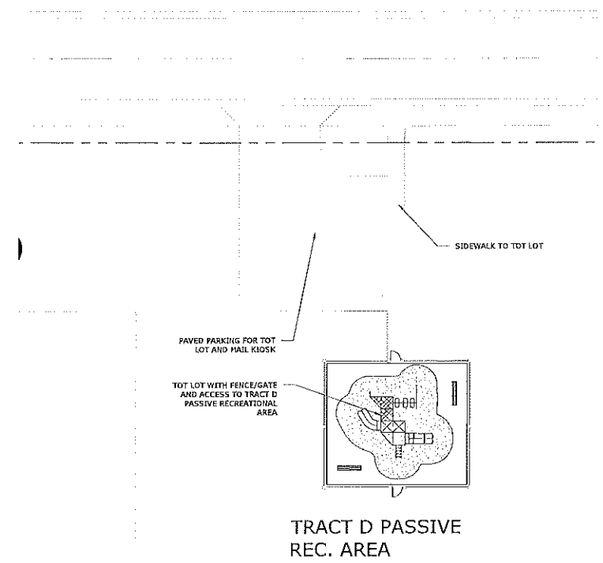


**ACTIVE RECREATIONAL AREA BLOW-UP DETAIL**
**1" = 10'**

Open Space Set-Aside Requirements:

Land Development Code (Residential 20%)
55.5ac. * .20 = 11.1 acres (required)

Open Space Provided:

| | |
|---|---|
| Tract A: | 0.10 acres (Buffer) |
| Tract B: | 0.20 acres (Buffer) |
| Tract C: | 0.40 acres (Buffer) |
| Tract D: | 7.77 acres (Passive) |
| Tract E: | 4.99 acres (Buffer) |
| Tract G: | 0.08 acres (Buffer) |
| Total: | 13.54 acres (11.1 required) |

**OPEN SPACE SET-ASIDE HATCH LEGEND**

ACTIVE RECREATIONAL AREA

PASSIVE RECREATIONAL AREA

REQUIRED BUFFER/TREE SAVE AREAS

G L SUMMITT
ENGINEERING INC
Office: Lake Mary
3667 Simonton Place
Lake Mary, Florida 32746
phone: 407-323-0705
fax: 407-992-8650
www.GLSeng.com

PMDW Ventures, LLC
6 Ambrose Lane
South Barrington, IL 60001

Hamrick Estates Gardens Subdivision
City of Apopka, Florida

**Major** Development Plan

Open Space Rec Plan

Plans not valid unless Signed, Dated and Sealed below.

GEOFFREY L. SUMMITT, P.E.
Date: July 15, 2019
FL Registration #58775
Certificate of Authorization #29665

Revisions

| NO. | DATE | DESCRIPTION |
|---|---|---|
| 1 | | |
| 2 | | |
| 3 | | |
| 4 | | |
| 5 | | |
| 6 | | |
| 7 | | |
| 8 | | |
| 9 | | |
| 10 | | |

SHEET NUMBER
5 OF 15

G L SUMMITT
ENGINEERING INC
Office: Lake Mary
3667 Simonton Place
Lake Mary, Florida 32746
phone: 407-323-0705
fax: 407-992-8650
www.GLSeng.com

PMDW Ventures, LLC
6 Ambrose Lane
South Barrington, IL 60001

Hamrick Estates Gardens Subdivision
City of Apopka, Florida

**Major** Development Plan

Detailed Site Plan 1

Plans not valid unless Signed, Dated and Sealed below.

GEOFFREY L. SUMMITT, P.E.
Date: July 15, 2019
FL Registration #58775
Certificate of Authorization #29665

Revisions

| NO. | DATE | DESCRIPTION |
|---|---|---|
| 1 | | |
| 2 | | |
| 3 | | |
| 4 | | |
| 5 | | |
| 6 | | |
| 7 | | |
| 8 | | |
| 9 | | |
| 10 | | |

SHEET NUMBER
6 OF 15

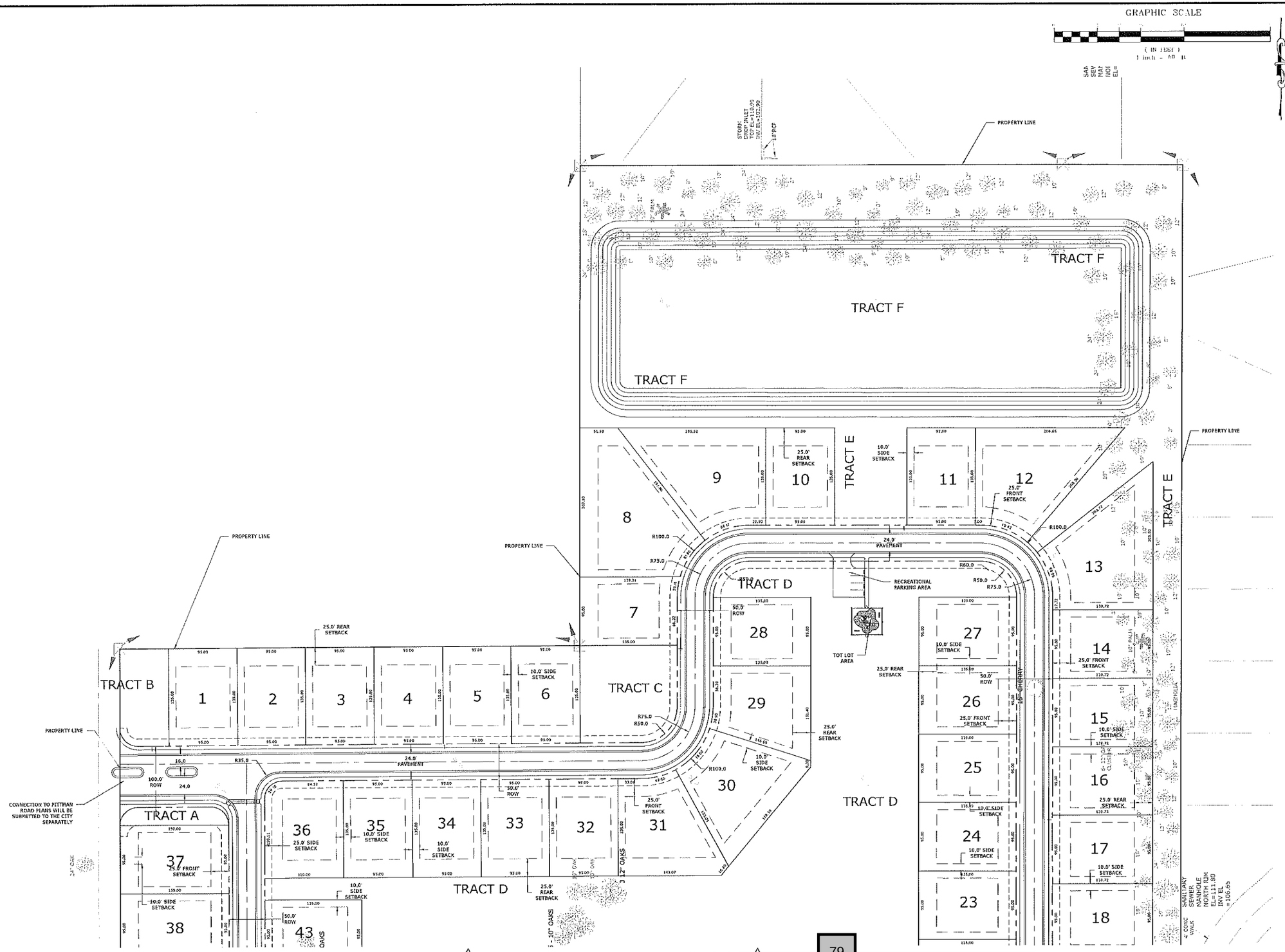



G L SUMMITT
ENGINEERING INC
Office: Lake Mary
3667 Simonton Place
Lake Mary, Florida 32746
phone: 407-323-0705
fax: 407-992-8650
www.GLSeng.com


PMDW Ventures, LLC
6 Ambrose Lane
South Barrington, IL 60001

Hamrick Estates Gardens Subdivision
City of Apopka, Florida

**Major** Development Plan

Detailed Site Plan 2

Plans not valid unless Signed, Dated and Sealed below.

GEOFFREY L. SUMMITT, P.E.
Date: July 15, 2019
FL Registration #58775
Certificate of Authorization #29665

Revisions

| NO. | DATE | DESCRIPTION |
|---|---|---|
| 1 | | |
| 2 | | |
| 3 | | |
| 4 | | |
| 5 | | |
| 6 | | |
| 7 | | |
| 8 | | |
| 9 | | |
| 10 | | |

SHEET NUMBER
7 OF 15

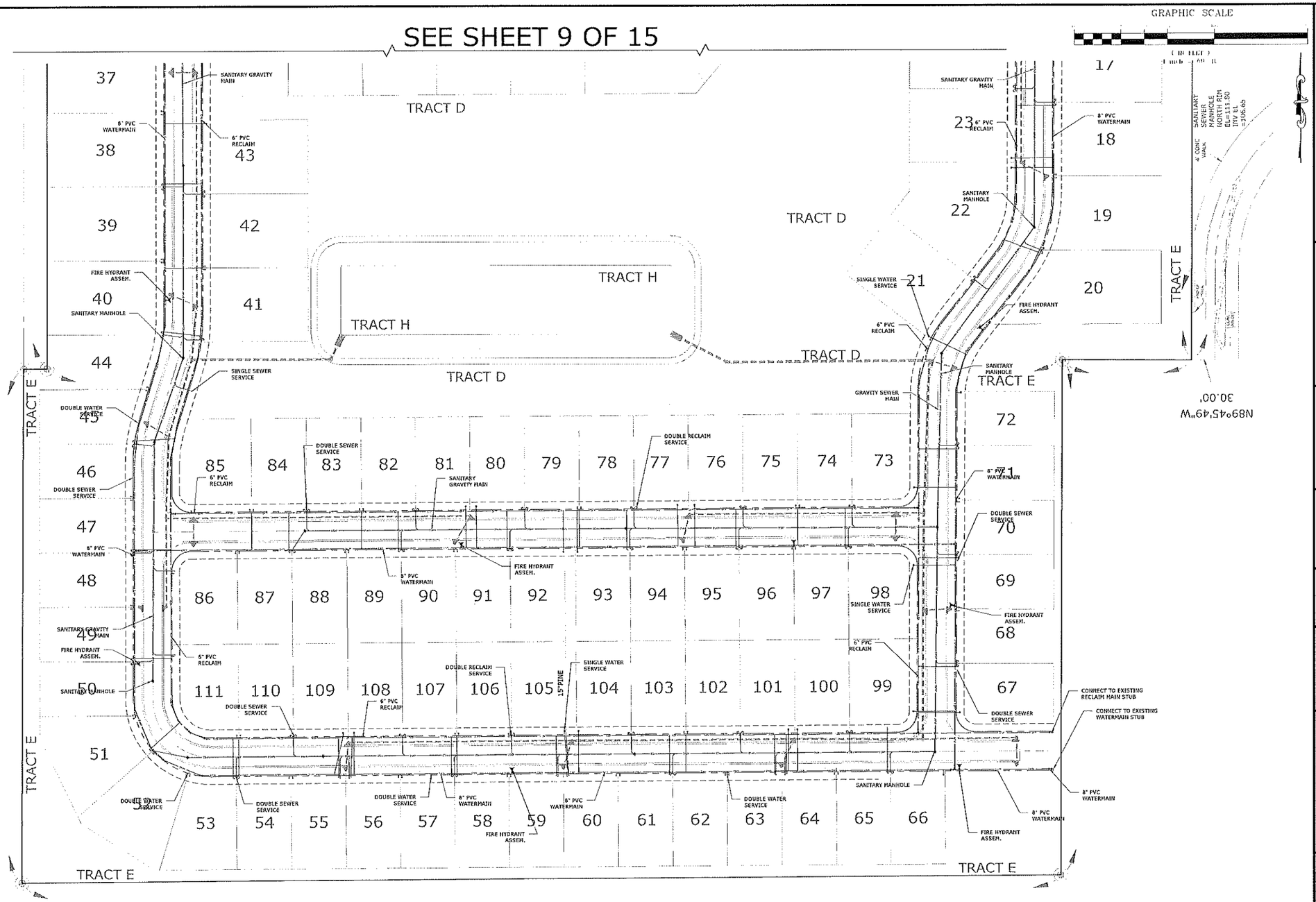


G L SUMMITT
ENGINEERING INC
Office: Lake Mary
3667 Simonton Place
Lake Mary, Florida 32746
phone: 407-323-0705
fax: 407-992-8650
www.GLSeng.com

PMDW Ventures, LLC
6 Ambrose Lane
South Barrington, IL 60001

Hamrick Estates
Gardens Subdivision
City of Apopka, Florida

**Major**
Development Plan

Utility Plan 1

Plans not valid unless Signed. Dated and Sealed below.

GEOFFREY L. SUMMITT, P.E.
Date: July 15, 2019
FL Registration #38775
Certificate of Authorization #29665

Revisions

| No. | DATE | DESCRIPTION |
|---|---|---|
| 1 | | |
| 2 | | |
| 3 | | |
| 4 | | |
| 5 | | |
| 6 | | |
| 7 | | |
| 8 | | |
| 9 | | |
| 10 | | |

SHEET NUMBER
8 OF 15

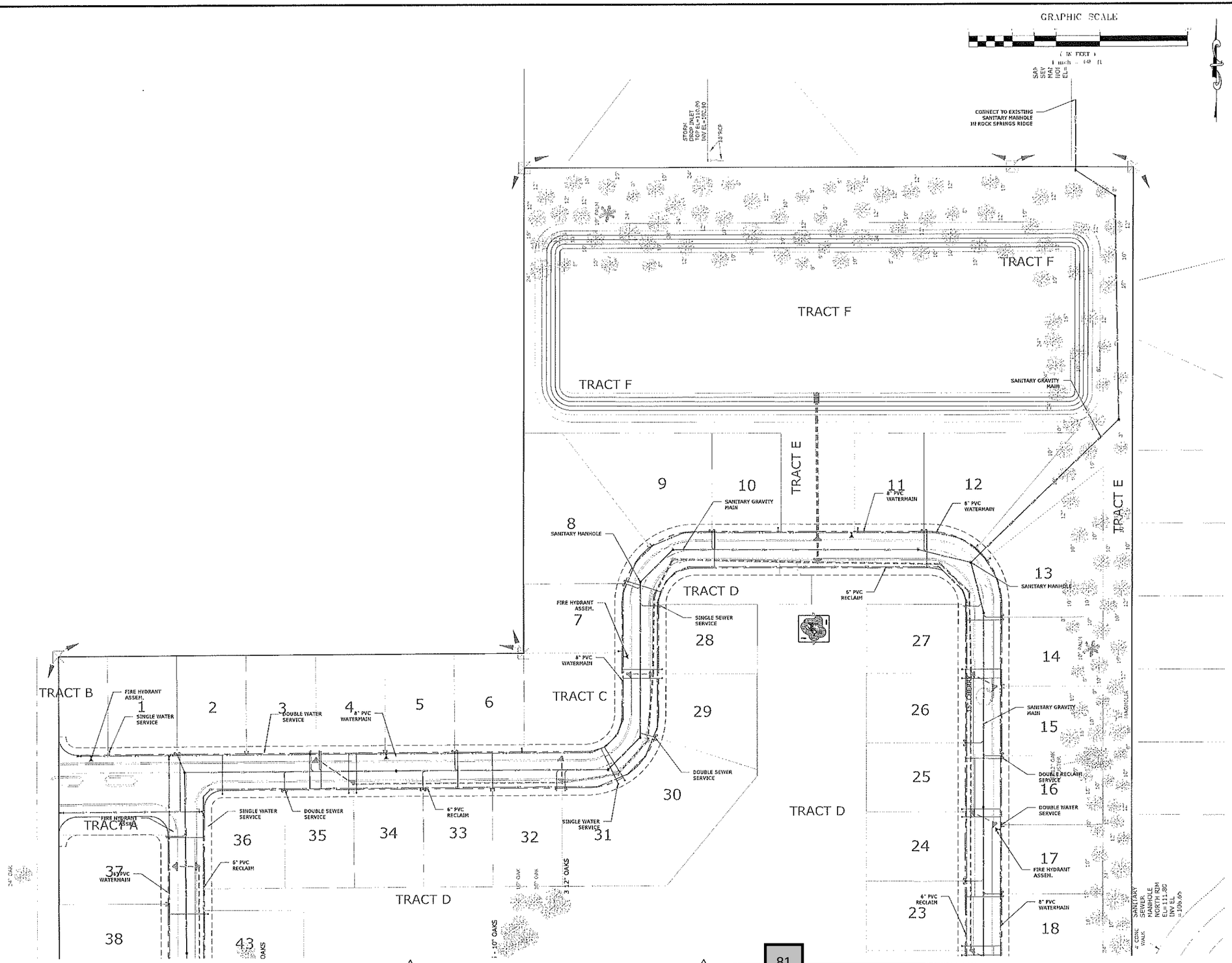


SEE SHEET 8 OF 15



G L SUMMITT
ENGINEERING INC
Office: Lake Mary
3667 Simonton Place
Lake Mary, Florida 32746
phone: 407-323-0705
fax: 407-992-8650
www.GLSeng.com

PMDW Ventures, LLC
6 Ambrose Lane
South Barrington, IL 60001

Hamrick Estates Gardens Subdivision
City of Apopka, Florida

**Major** Development Plan

Utility Plan 2

Plans not valid unless Signed, Dated and Sealed below.

GEOFFREY L. SUMMITT, P.E.
Date: July 15, 2019
FL Registration #38775
Certificate of Authorization #29665

Revisions

| NO. | DATE | DESCRIPTION |
|---|---|---|
| 1 | | |
| 2 | | |
| 3 | | |
| 4 | | |
| 5 | | |
| 6 | | |
| 7 | | |
| 8 | | |
| 9 | | |
| 10 | | |

SHEET NUMBER
9 OF 15

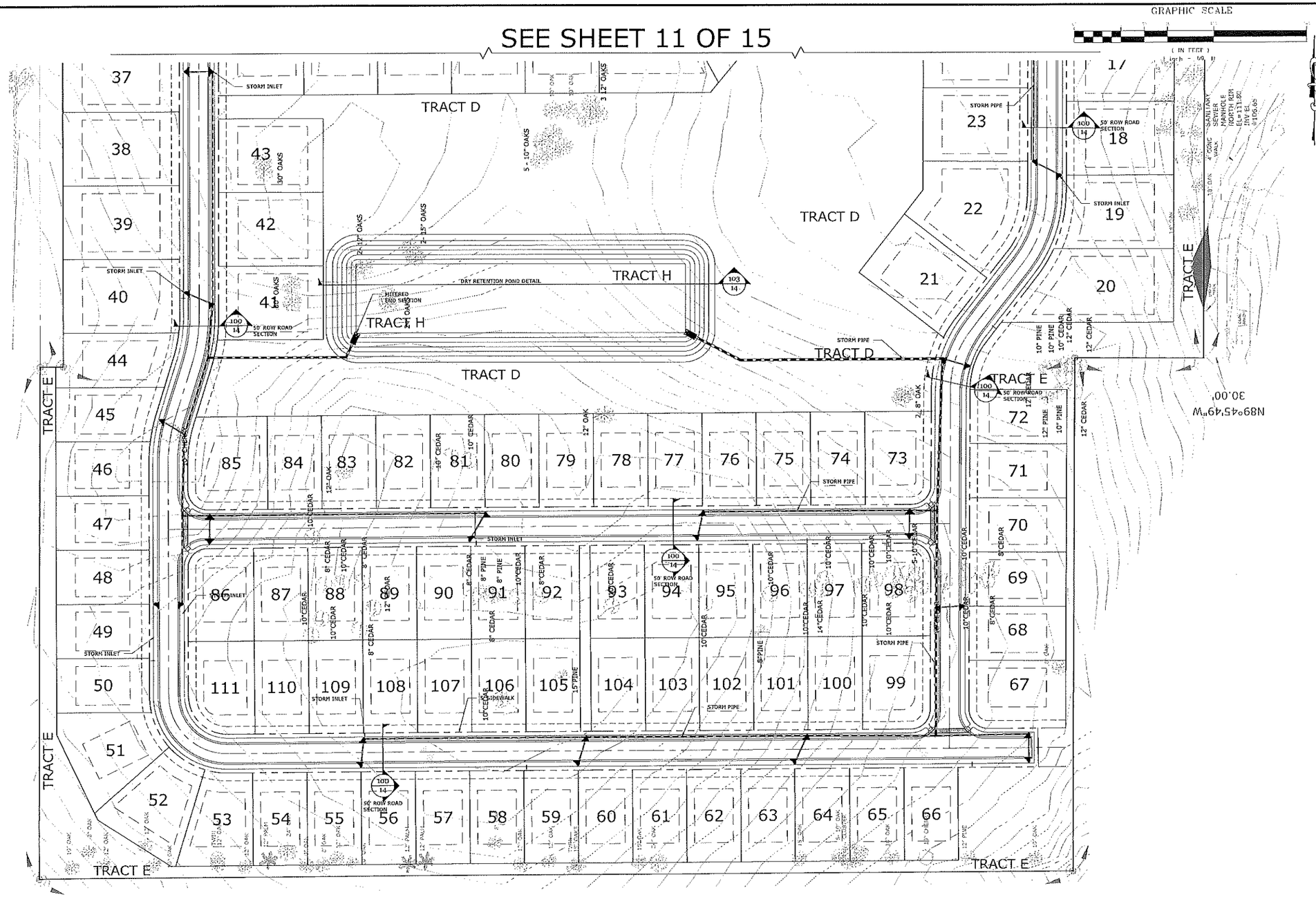


G L SUMMITT
ENGINEERING INC
Office: Lake Mary
3667 Simonton Place
Lake Mary, Florida 32746
phone: 407-323-0705
fax: 407-992-8650
www.GLSeng.com

PMDW Ventures, LLC
6 Ambrose Lane
South Barrington, IL 60001

Hamrick Estates
Gardens Subdivision
City of Apopka, Florida

**Major**
Development Plan

Drainage &
Grading Plan 1

Plans not valid unless Signed, Dated and Sealed below.

GEOFFREY L. SUMMITT, P.E.
Date: July 15, 2019
FL Registration #58775
Certificate of Authorization #29665

Revisions

| NO. | DATE | DESCRIPTION |
|---|---|---|
| 1 | | |
| 2 | | |
| 3 | | |
| 4 | | |
| 5 | | |
| 6 | | |
| 7 | | |
| 8 | | |
| 9 | | |
| 10 | | |

SHEET NUMBER
10 OF 15

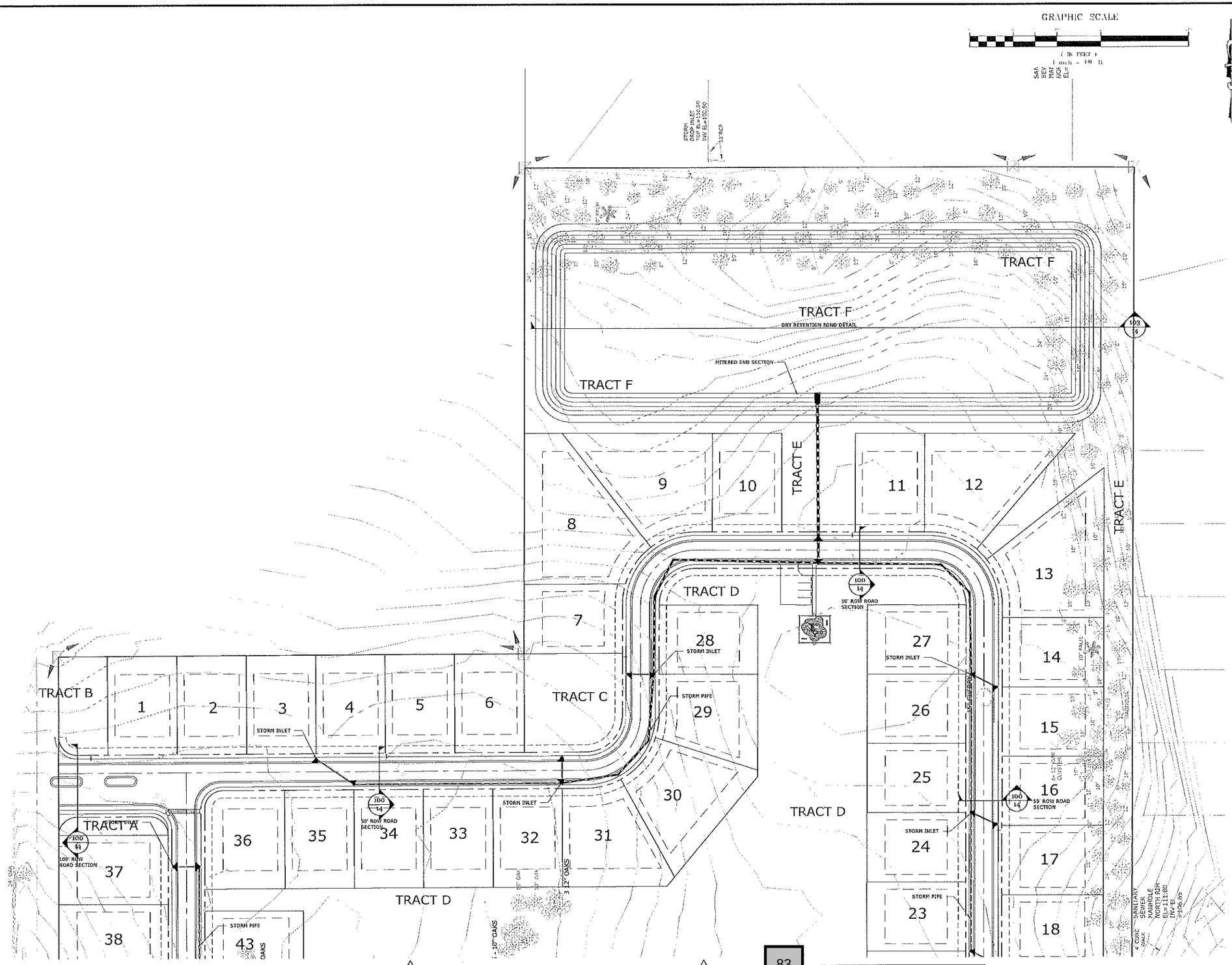


SEE SHEET 10 OF 15



G L SUMMITT
ENGINEERING INC
Office: Lake Mary
3667 Simonton Place
Lake Mary, Florida 32746
phone: 407-323-0705
fax: 407-992-8650
www.GLSeng.com

PMDW Ventures, LLC
6 Ambrose Lane
South Barrington, IL 60001

Hamrick Estates Gardens Subdivision
City of Apopka, Florida

**Major** Development Plan

Drainage & Grading Plan 2

Plans not valid unless Signed, Dated and Sealed below.

GEOFFREY L. SUMMITT, P.E.
Date: July 15, 2019
FL Registration #58775
Certificate of Authorization #29665

Revisions

| NO. | DATE | DESCRIPTION |
|---|---|---|
| 1 | | |
| 2 | | |
| 3 | | |
| 4 | | |
| 5 | | |
| 6 | | |
| 7 | | |
| 8 | | |
| 9 | | |
| 10 | | |

SHEET NUMBER
11 OF 15

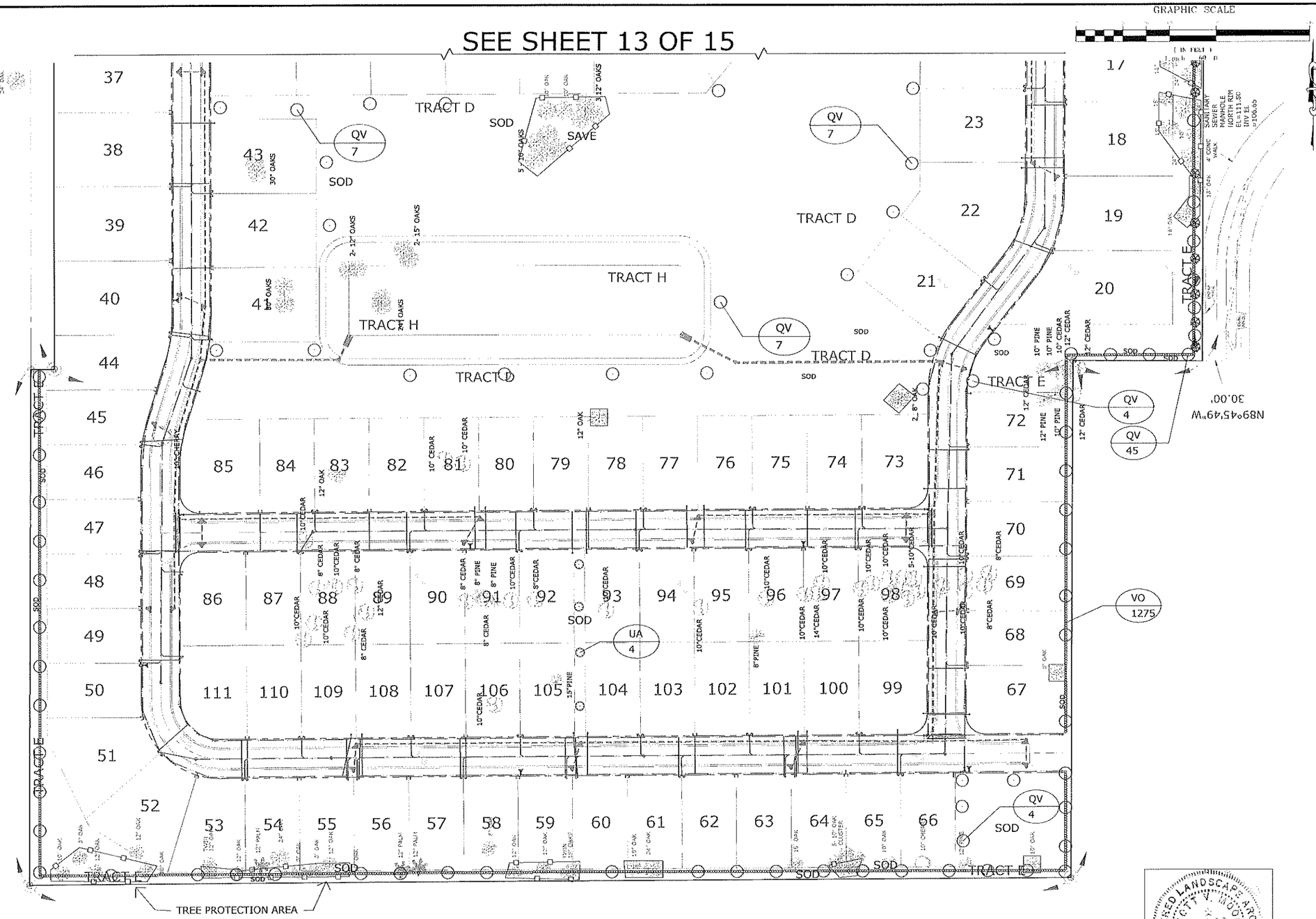


Ravensdale Planning & Design
Land Planning • Landscape Architecture • Project Management • Expert Witness
3203 C East Colonial Drive #291 Orlando, Florida 32803
(407) 647-1213



G L SUMMITT
ENGINEERING INC
Office: Lake Mary
3667 Simonton Place
Lake Mary, Florida 32746
phone: 407-323-0705
fax: 407-992-8650
www.GLSeng.com

PMDW Ventures, LLC
6 Ambrose Lane
South Barrington, IL 60001

Hamrick Estates
Gardens Subdivision
City of Apopka, Florida

**Major**
Development Plan

Landscape Plan
1

Plans not valid unless Signed. Dated and Sealed below.

GEOFFREY L. SUMMITT, P.E.
Date: July 15, 2019
FL Registration #58775
Certificate of Authorization #29665

Revisions

| NO. | DATE | DESCRIPTION |
|---|---|---|
| 1 | | |
| 2 | | |
| 3 | | |
| 4 | | |
| 5 | | |
| 6 | | |
| 7 | | |
| 8 | | |
| 9 | | |
| 10 | | |

SHEET NUMBER
12 OF 15

Ravensdale Planning & Design
Land Planning • Landscape Architecture • Project Management • Expert Witness
3208 C East Colonial Drive #294 Orlando, Florida 32803
(407) 647-1213

REGISTERED LANDSCAPE ARCHITECT
SCOTT V. MOORE
1025
STATE OF FLORIDA

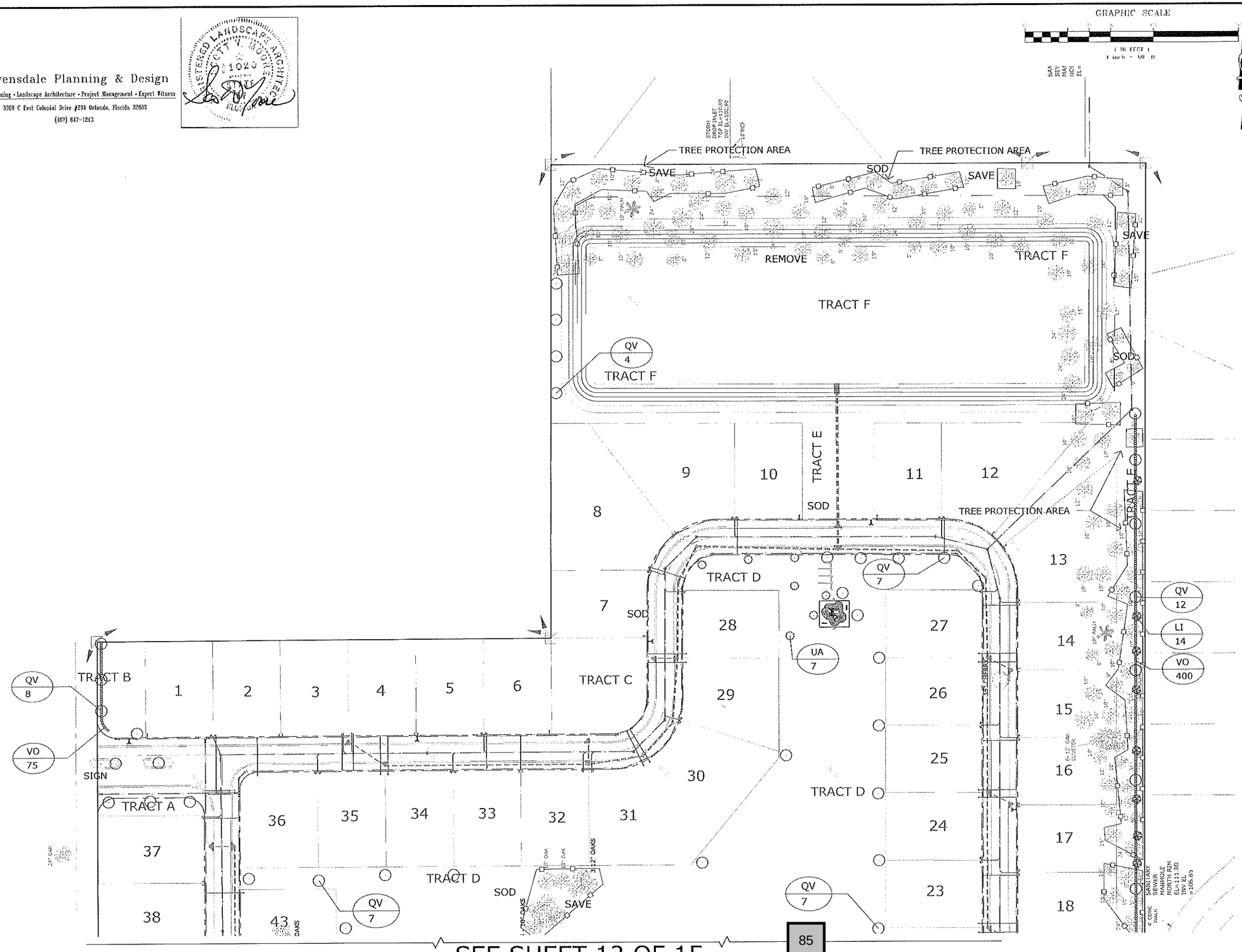


G L SUMMITT
ENGINEERING INC
Office: Lake Mary
3667 Simonton Place
Lake Mary, Florida 32746
phone: 407-323-0705
fax: 407-992-8650
www.GLSeng.com

PMDW Ventures, LLC
6 Ambrose Lane
South Barrington, IL 60001

Hamrick Estates
Gardens Subdivision
City of Apopka, Florida

**Major**
Development Plan

Landscape Plan
2

Plans not valid unless Signed, Dated and Sealed below.

GEOFFREY L. SUMMITT, P.E.
Date: July 15, 2019
FL Registration #38775
Certificate of Authorization #29665

Revisions

| NO. | DATE | DESCRIPTION |
|---|---|---|
| 1 | | |
| 2 | | |
| 3 | | |
| 4 | | |
| 5 | | |
| 6 | | |
| 7 | | |
| 8 | | |
| 9 | | |
| 10 | | |

SHEET NUMBER
13 OF 15

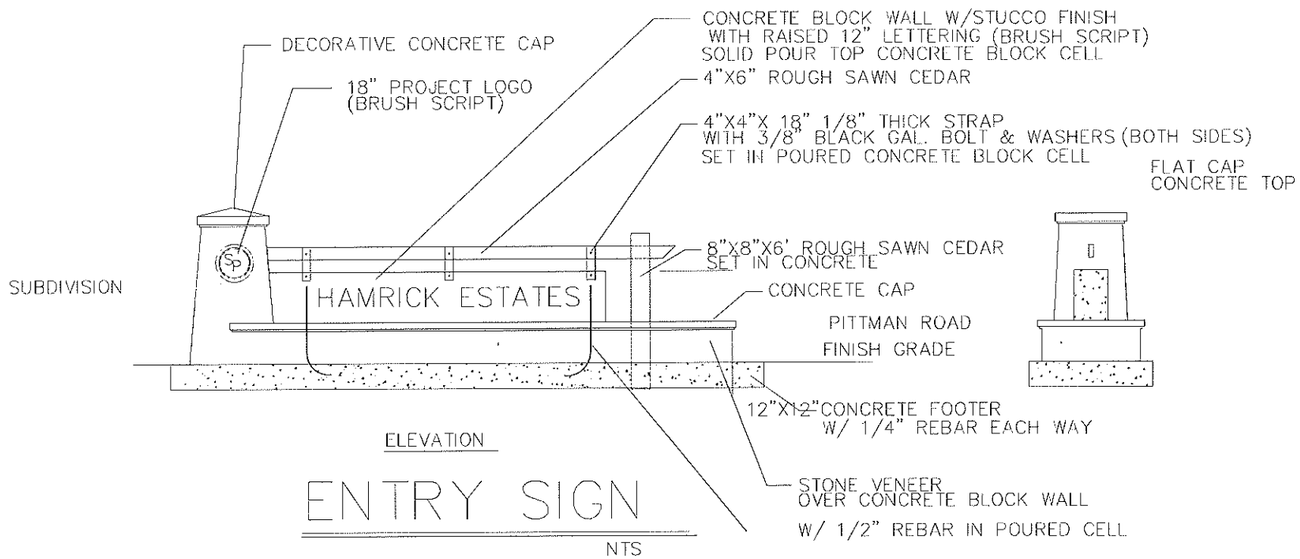


ELEVATION

# ENTRY SIGN

NTS

THREE CANOPY TREES REQUIRED PER LOT
NOT INCLUDED IN PLANT LIST

## PLANT LIST

| SYMBOL | BOTANICAL NAME (COMMON NAME) | MINIMUM SIZE/SPACING | DROUGHT TOLERANCE | NATIVE FLORIDA | QUANTITY |
|---|---|---|---|---|---|
| QV | QUERCUS VIRGINIANA (LIVE OAK) | 8' MIN.HT. 2.5" CAL. 4'-5'MIN.SPREAD. | YES | YES | 105 |
| UA | ULMUS ALATA (WINGED ELM) | 8' MIN.HT. 2.5" CAL. 4'-5'MIN.SPREAD. | YES | NO | 11 |
| LI | LAGERSTROEMIA INDICA (CREPEMYRTLE ) | 7'-8' MIN.HT. 2" CAL. 3'-4' MIN.SPREAD. | YES | NO | 14 |
| VO | VIBURNUM ODORATISSIMUM (SWEET VIBURNUM) | 30" MIN.HT. 24" MIN.SPREAD 7 GAL. 30" O.C. | YES | NO | 1750 |
| BAHIA SOD | QUANTITY TO BE CALCULATED BY CONTRACTOR | | YES | YES | |

PLANT SYMBOL — DD — XX — PLANT QUANITY

NOTE:
WHERE GALLON REFERENCES MAY CONFLICT WITH HEIGHT/SPREAD AND CALIPER MEASUREMENTS, THE HEIGHT/SPREAD AND CALIPER MEASUREMENTS SHALL GOVERN.

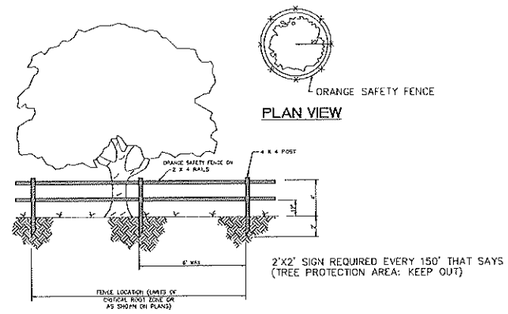


TREE PROTECTION FENCE DETAIL

## TREE RETENTION AREA

RSF 35.2 AC
MU 20.3 AC

RSF 35.2 AC X 10% = 3.5AC X 41.5% = 1.5AC
MU 20.3 AC X 10% = 2.03AC X 7.5% = .15AC

## TREE CALCULATION

| | RSF/REMOVED | SAVED | MU/REMOVED | SAVED |
|---|---|---|---|---|
| # OF SPECIMEN TREES | 13 | 5 | 1 | 1 |
| # OF CANOPY TREES | 56 | 49 | 36 | 17 |
| # OF UNDERSTORY TREES | 8 | 10 | 11 | 6 |

TOTAL INCHES REMOVED RSF 1037" SAVED 744"
TOTAL INCHES REMOVED MU 513" SAVED 284"

## TREE REMOVAL CALCULATION

1196" OAK TREES
330" CEDAR TREES
24" PINE TREES

1550" TOTAL INCHES REMOVED
1550"X $10/IN.= $15,500
TO BE PAID INTO TREE MITIGATION BANK

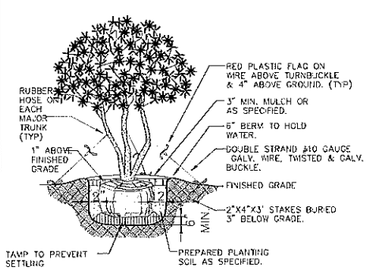


MULTI-TRUNK DETAIL

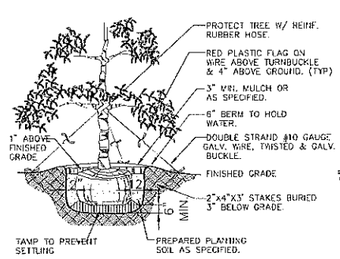


TREE PLANTING DETAIL

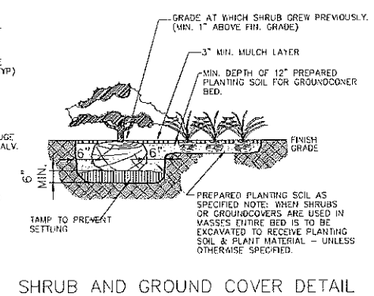


SHRUB AND GROUND COVER DETAIL

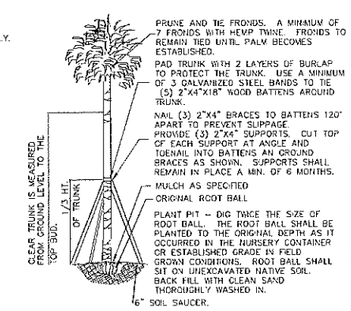


PALM PLANTING DETAIL

## GENERAL LANDSCAPE NOTES

1. ALL PLANTS TO BE FLORIDA NO. 1, OR BETTER AS OUTLINED UNDER 'GRADES AND STANDARDS FOR NURSERY PLANTS, PART I, 1963 AND PART II, STATE OF FLORIDA DEPARTMENT OF AGRICULTURE, TALLAHASSEE, FLORIDA, AND ANY AMENDMENTS THERETO.
2. ALL TREES AND PLANT MATERIAL SHALL BE PLANTED IN ACCORDANCE WITH THE SPECIFICATIONS DESCRIBED IN THE STATE DEPARTMENT OF AGRICULTURE AND CONSUMER SERVICES, DIVISION OF FORESTRY, "TREE PROTECTION MANUAL FOR BUILDERS AND DEVELOPERS", OCTOBER, 1989.
3. THE LANDSCAPE CONTRACTOR (CONTRACTED BY OWNER, ETC.) SHALL BE RESPONSIBLE FOR ALL MATERIALS AND ALL WORK AS CALLED FOR ON THE LANDSCAPE PLANS. THE LIST OF PLANT QUANTITIES ACCOMPANYING THE PLANS SHALL BE USED AS A GUIDE ONLY. IF A VARIATION OCCURS BETWEEN THE PLANS AND THE PLANT LIST, THE PLANS SHALL CONTROL.
4. ALL TREES, SHRUBS AND GROUND COVERS SHALL BE PLANTED USING A SOIL MIXTURE PREPARED ACCORDINGLY (2/3 EXISTING SOIL, 1/3 PEAT).
5. THE LANDSCAPE CONTRACTOR SHALL INSURE ADEQUATE VERTICAL DRAINAGE IN ALL PLANT BEDS AND PLANTERS. VERTICAL DRILLING THROUGH ANY COMPACTED FILL TO NATIVE SOIL SHALL BE ACCOMPLISHED TO AID DRAINAGE.
6. ALL PLANT BEDS AND TREE WATERING BASINS SHALL BE TOP DRESSED WITH THREE INCHES (3") OF PINE BARK MULCH
7. NO TREES SHALL BE PLANTED CLOSER THAN FIVE FEET (5') FROM THE EDGE OF PAVEMENT TO ALLOW ADEQUATE TREE TRUNK PROTECTION .
8. LANDSCAPE CONTRACTOR SHALL BE WHOLLY RESPONSIBLE FOR STABILITY AND PLUMB CONDITION OF ALL TREES AND SHALL BE LEGALLY LIABLE FOR ANY DAMAGE CAUSED BY THE INSTABILITY OF ANY PLANT MATERIAL.
9. ALL LAWN AREAS TO RECEIVE SOD SHALL BE DISKED FOUR(4) TO SIX(6) INCHES AND DRAGGED TO ESTABLISH A LEVEL FINISH GRADE. ALL DEBRIS TO BE REMOVED FROM THE SITE.
10. SOD SHALL BE FREE OF WEEDS AND PESTS. IT SHALL BE LAID EVENLY AND ROLLED, WITH TIGHT FITTING JOINTS. THE SOD SHALL CONTAIN MOIST SOIL WHICH DOES NOT FALL APART OR TEAR WHEN LIFTED. ALL AREAS NOT PAVED OR OTHERWISE LANDSCAPED SHALL BE SODDED. SOD SHALL BE ARGENTINE BAHIA OR EQUAL.
11. ALL LANDSCAPE AREAS TO BE IRRIGATED WITH AN AUTOMATIC UNDERGROUND SYSTEM, WITH 100% COVERAGE, BACKFLOW PREVENTOR, & RAIN SENSOR DEVICE. DIRECT SPRAY HEADS AWAY FROM ANY NATURAL AREAS AND PAVED SURFACES.
12. THE TREE CALIPER OF ALL CANOPY TREES SPECIFIED ON THE PLANT LIST SHALL BE AT LEAST THREE [illegible] IN DIAMETER WHEN MEASURED AT SIX (6) INCHES ABOVE GRADE.
13. LANDSCAPE CONTRA[illegible] RESPONSIBLE FOR ANY DAMAGE OCCURRING ON SITE [illegible] AREAS, INCLUDING BUT NOT LIMITED TO BUILDINGS, PAVING, UTILITIES, ETC., WHICH IS CAUSED BY PREPARING OR INSTALLING ANY AND ALL PLANT MATERIAL.




Ravensdale Planning & Design
Land Planning Landscape Architecture Project Management Expert Witness
3283 Harmony Terrace, Crystal River, Florida 34429
(407) 647-1213



G L SUMMITT
ENGINEERING INC
Office: Lake Mary
3667 Simonton Place
Lake Mary, Florida 32746
phone: 407-323-0705
fax: 407-992-8650
www.GLSeng.com


PMDW Ventures, LLC
6 Ambrose Lane
South Barrington, IL 60001

Hamrick Estates Gardens Subdivision
City of Apopka, Florida

**Major Development Plan**

Landscape Details

Plans not valid unless Signed. Dated and Sealed below.

GEOFFREY L. SUMMITT, P.E.
Date: July 15, 2019
FL Registration #38775
Certificate of Authorization #29665

Revisions

| NO. | DATE | DESCRIPTION |
|---|---|---|
| 1 | [illegible] | [illegible] |
| 2 | [illegible] | [illegible] |
| 3 | [illegible] | [illegible] |
| 4 | [illegible] | [illegible] |
| 5 | [illegible] | [illegible] |
| 6 | [illegible] | [illegible] |
| 7 | [illegible] | [illegible] |
| 8 | [illegible] | [illegible] |
| 9 | [illegible] | [illegible] |
| 10 | [illegible] | [illegible] |

SHEET NUMBER
14 OF 15

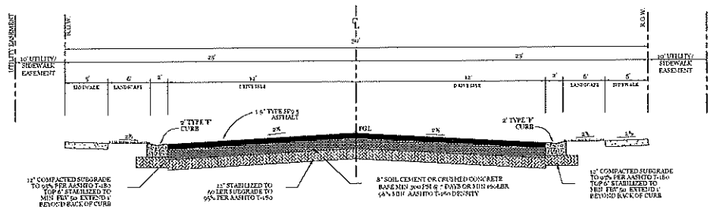


100 TYPICAL 50' ROW ROADWAY CROSS SECTION DETAIL
N.T.S.

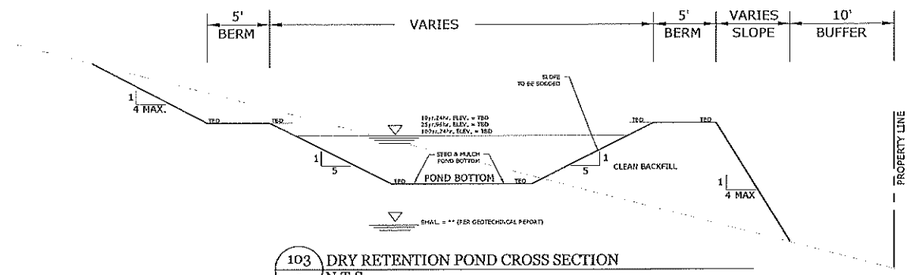


103 DRY RETENTION POND CROSS SECTION
N.T.S.

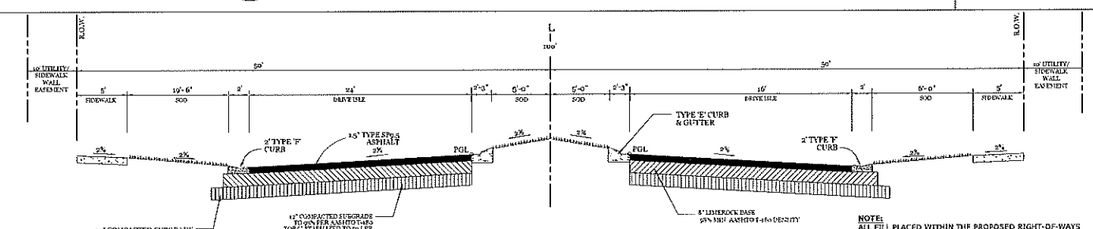


NOTE:
ALL FILL PLACED WITHIN THE PROPOSED RIGHT-OF-WAYS SHALL BE COMPRISED CLEAN FINE SANDS WITH A REMOLDED PERMEABILITY OF 8 FEET PER DAY OR GREATER WHEN COMPACTED TO A DENSITY OF 91 PERCENT OF THE SOIL'S MAXIMUM MODIFIED PROCTOR DENSITY VALUE (ASTM D-1557). THE FILL MATERIAL SHALL HAVE A MAXIMUM FINES CONTENT OF 3 PERCENT PASSING THE U.S. NO. 200 SIEVE.

106 TYPICAL ROADWAY SECTION 'ENTRANCE ROAD' AT MEDIAN
N.T.S.

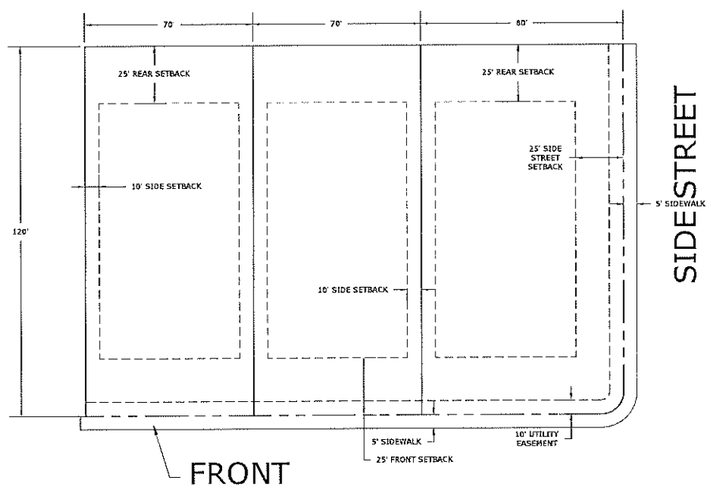


102 TYPICAL MU-ES-GT LOT LAYOUT PLAN
N.T.S.

| Lot Area Table | | | | |
|---|---|---|---|---|
| Lot Number | Gross Area (sq ft) | Gross Area (ac.) | Lot Width (ft) | Zoning |
| 1 | 12,825.00 | 0.29 | 95 | RSF-1A |
| 2 | 12,825.00 | 0.29 | 95 | RSF-1A |
| 3 | 12,825.00 | 0.29 | 95 | RSF-1A |
| 4 | 12,825.00 | 0.29 | 95 | RSF-1A |
| 5 | 12,825.00 | 0.29 | 95 | RSF-1A |
| 6 | 12,825.00 | 0.29 | 95 | RSF-1A |
| 7 | 12,865.00 | 0.30 | 95 | RSF-1A |
| 8 | 25,315.00 | 0.58 | 95 | RSF-1A |
| 9 | 21,234.00 | 0.49 | 95 | RSF-1A |
| 10 | 12,825.00 | 0.29 | 95 | RSF-1A |
| 11 | 12,825.00 | 0.29 | 95 | RSF-1A |
| 12 | 20,882.00 | 0.48 | 95 | RSF-1A |
| 13 | 21,538.00 | 0.49 | 95 | RSF-1A |
| 14 | 13,178.00 | 0.30 | 95 | RSF-1A |
| 15 | 13,178.00 | 0.30 | 95 | RSF-1A |
| 16 | 13,178.00 | 0.30 | 95 | RSF-1A |
| 17 | 13,178.00 | 0.30 | 95 | RSF-1A |
| 18 | 13,178.00 | 0.30 | 95 | RSF-1A |
| 19 | 13,546.00 | 0.31 | 95 | RSF-1A |
| 20 | 17,648.00 | 0.41 | 95 | RSF-1A |
| 21 | 12,825.00 | 0.30 | 95 | RSF-1A |
| 22 | 16,290.00 | 0.37 | 95 | RSF-1A |
| 23 | 12,825.00 | 0.29 | 95 | RSF-1A |
| 24 | 12,825.00 | 0.29 | 95 | RSF-1A |
| 25 | 12,825.00 | 0.29 | 95 | RSF-1A |
| 26 | 12,825.00 | 0.29 | 95 | RSF-1A |
| 27 | 12,825.00 | 0.29 | 95 | RSF-1A |
| 28 | 12,825.00 | 0.29 | 95 | RSF-1A |
| 29 | 14,881.00 | 0.34 | 95 | RSF-1A |
| 30 | 18,229.00 | 0.42 | 95 | RSF-1A |
| 31 | 16,812.00 | 0.39 | 95 | RSF-1A |
| 32 | 12,825.00 | 0.29 | 95 | RSF-1A |
| 33 | 12,825.00 | 0.29 | 95 | RSF-1A |
| 34 | 12,825.00 | 0.29 | 95 | RSF-1A |
| 35 | 12,825.00 | 0.29 | 95 | RSF-1A |
| 36 | 14,677.00 | 0.34 | 95 | RSF-1A |
| 37 | 14,250.00 | 0.33 | 70 | MU-EAST SHORE |
| 38 | 14,250.00 | 0.33 | 70 | MU-EAST SHORE |
| 39 | 14,250.00 | 0.33 | 70 | MU-EAST SHORE |
| 40 | 14,010.00 | 0.32 | 70 | MU-EAST SHORE |
| 41 | 12,842.00 | 0.29 | 70 | MU-EAST SHORE |
| 42 | 12,825.00 | 0.29 | 70 | MU-EAST SHORE |
| 43 | 12,825.00 | 0.29 | 70 | MU-EAST SHORE |
| 44 | 9,649.00 | 0.22 | 70 | MU-EAST SHORE |
| 45 | 8,535.00 | 0.20 | 70 | MU-EAST SHORE |
| 46 | 8,400.00 | 0.19 | 70 | MU-EAST SHORE |
| 47 | 8,400.00 | 0.19 | 70 | MU-EAST SHORE |
| 48 | 8,400.00 | 0.19 | 70 | MU-EAST SHORE |
| 49 | 8,400.00 | 0.19 | 70 | MU-EAST SHORE |
| 50 | 11,010.00 | 0.25 | 70 | MU-EAST SHORE |
| 51 | 18,624.00 | 0.43 | 70 | MU-EAST SHORE |
| 52 | 11,959.00 | 0.27 | 70 | MU-EAST SHORE |
| 53 | 8,400.00 | 0.19 | 70 | MU-EAST SHORE |
| 54 | 8,400.00 | 0.19 | 70 | MU-EAST SHORE |
| 55 | 8,400.00 | 0.19 | 70 | MU-EAST SHORE |
| 56 | 8,400.00 | 0.19 | 70 | MU-EAST SHORE |
| 57 | 8,400.00 | 0.19 | 70 | MU-EAST SHORE |
| 58 | 8,400.00 | 0.19 | 70 | MU-EAST SHORE |
| 59 | 8,400.00 | 0.19 | 70 | MU-EAST SHORE |
| 60 | 8,400.00 | 0.19 | 70 | MU-EAST SHORE |
| 61 | 8,400.00 | 0.19 | 70 | MU-EAST SHORE |
| 62 | 8,400.00 | 0.19 | 70 | MU-EAST SHORE |

| Lot Area Table | | | | |
|---|---|---|---|---|
| Lot Number | Gross Area (sq ft) | Gross Area (ac.) | Lot Width (ft) | Zoning |
| 63 | 8,400.00 | 0.19 | 70 | MU-EAST SHORE |
| 64 | 8,400.00 | 0.19 | 70 | MU-EAST SHORE |
| 65 | 10,536.00 | 0.24 | 70 | MU-EAST SHORE |
| 66 | 20,733.00 | 0.47 | 70 | MU-EAST SHORE |
| 67 | 10,369.00 | 0.24 | 70 | MU-EAST SHORE |
| 68 | 8,750.00 | 0.20 | 70 | MU-EAST SHORE |
| 69 | 8,750.00 | 0.20 | 70 | MU-EAST SHORE |
| 70 | 8,750.00 | 0.20 | 70 | MU-EAST SHORE |
| 71 | 8,750.00 | 0.20 | 70 | MU-EAST SHORE |
| 72 | 8,750.00 | 0.20 | 70 | MU-EAST SHORE |
| 73 | 10,135.00 | 0.23 | 70 | MU-EAST SHORE |
| 74 | 8,400.00 | 0.19 | 70 | MU-EAST SHORE |
| 75 | 8,400.00 | 0.19 | 70 | MU-EAST SHORE |
| 76 | 8,400.00 | 0.19 | 70 | MU-EAST SHORE |
| 77 | 8,400.00 | 0.19 | 70 | MU-EAST SHORE |
| 78 | 8,400.00 | 0.19 | 70 | MU-EAST SHORE |
| 79 | 8,400.00 | 0.19 | 70 | MU-EAST SHORE |
| 80 | 8,400.00 | 0.19 | 70 | MU-EAST SHORE |
| 81 | 8,400.00 | 0.19 | 70 | MU-EAST SHORE |
| 82 | 8,400.00 | 0.19 | 70 | MU-EAST SHORE |
| 83 | 8,400.00 | 0.19 | 70 | MU-EAST SHORE |
| 84 | 8,400.00 | 0.19 | 70 | MU-EAST SHORE |
| 85 | 11,950.00 | 0.27 | 70 | MU-EAST SHORE |
| 86 | 10,127.00 | 0.23 | 70 | MU-EAST SHORE |
| 87 | 8,400.00 | 0.19 | 70 | MU-EAST SHORE |
| 88 | 8,400.00 | 0.19 | 70 | MU-EAST SHORE |
| 89 | 8,400.00 | 0.19 | 70 | MU-EAST SHORE |
| 90 | 8,400.00 | 0.19 | 70 | MU-EAST SHORE |
| 91 | 8,400.00 | 0.19 | 70 | MU-EAST SHORE |
| 92 | 8,400.00 | 0.19 | 70 | MU-EAST SHORE |
| 93 | 8,400.00 | 0.19 | 70 | MU-EAST SHORE |
| 94 | 8,400.00 | 0.19 | 70 | MU-EAST SHORE |
| 95 | 8,400.00 | 0.19 | 70 | MU-EAST SHORE |
| 96 | 8,400.00 | 0.19 | 70 | MU-EAST SHORE |
| 97 | 8,400.00 | 0.19 | 70 | MU-EAST SHORE |
| 98 | 10,495.00 | 0.24 | 70 | MU-EAST SHORE |
| 99 | 9,982.00 | 0.23 | 70 | MU-EAST SHORE |
| 100 | 8,400.00 | 0.19 | 70 | MU-EAST SHORE |
| 101 | 8,400.00 | 0.19 | 70 | MU-EAST SHORE |
| 102 | 8,400.00 | 0.19 | 70 | MU-EAST SHORE |
| 103 | 8,400.00 | 0.19 | 70 | MU-EAST SHORE |
| 104 | 8,400.00 | 0.19 | 70 | MU-EAST SHORE |
| 105 | 8,400.00 | 0.19 | 70 | MU-EAST SHORE |
| 106 | 8,400.00 | 0.19 | 70 | MU-EAST SHORE |
| 107 | 8,400.00 | 0.19 | 70 | MU-EAST SHORE |
| 108 | 8,400.00 | 0.19 | 70 | MU-EAST SHORE |
| 109 | 8,400.00 | 0.19 | 70 | MU-EAST SHORE |
| 110 | 8,400.00 | 0.19 | 70 | MU-EAST SHORE |
| 111 | 9,696.00 | 0.22 | 70 | MU-EAST SHORE |

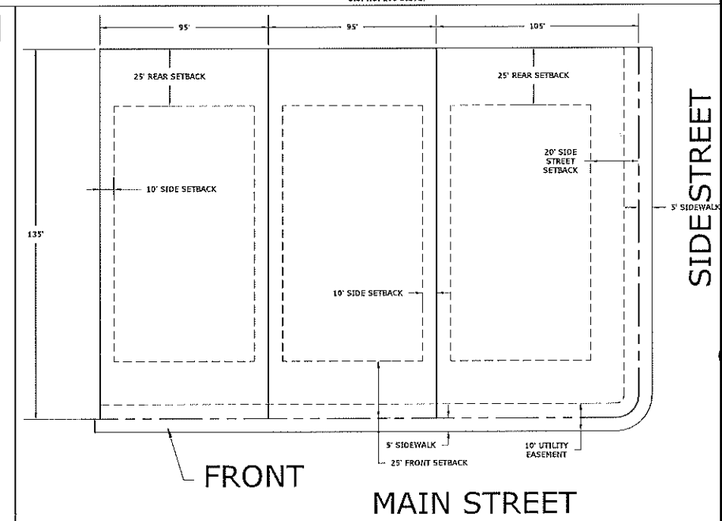


105 TYPICAL RSF-1A LOT LAYOUT PLAN
N.T.S.

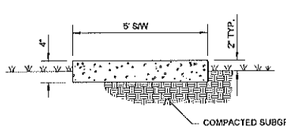


CONCRETE WALK AT 3,000 PSI
WOOD FLOAT FINISH, SAW CUT
CONTRACTION JOINTS AT 5' O.C. MIN.
EXPANSION JOINT AT 20' O.C. MIN

NOTE: ALL SIDEWALK TO BE CONSTRUCTED AS PART OF INFRASTRUCTURE

105 STANDARD SIDEWALK DETAIL
N.T.S.

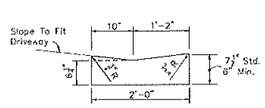


For curb, gutter, curb and gutter and traffic separators provide contraction joints at 10' centers (max.). Contraction joints adjacent to concrete pavement on tangents and flat curves are to match the pavement joints, with intermediate joints not to exceed 10' centers.

300M MIAMI CURB
N.T.S.


G L SUMMITT
ENGINEERING INC
Office: Lake Mary
3667 Simonton Place
Lake Mary, Florida 32746
phone: 407-323-0705
fax: 407-992-8650
www.GLSeng.com


PMDW Ventures, LLC
6 Ambrose Lane
South Barrington, IL 60001

Hamrick Estates Gardens Subdivision
City of Apopka, Florida

Major Development Plan

General Details 1

Plans not valid unless Signed, Dated and Sealed below.

GEOFFREY L. SUMMITT, P.E.
Date: July 15, 2019
FL Registration #58775
Certificate of Authorization #29665

Revisions

| NO. | DATE | DESCRIPTION |
|---|---|---|
| 1 | [illegible] | |
| 2 | [illegible] | |
| 3 | [illegible] | |
| 4 | [illegible] | |
| 5 | [illegible] | |
| 6 | [illegible] | |
| 7 | [illegible] | |
| 8 | [illegible] | |
| 9 | [illegible] | |
| 10 | [illegible] | |

SHEET NUMBER
15 OF 15

DOC# 20190292367
05/10/2019 03:11:25 PM Page 1 of 12
Rec Fee: $103.50
Deed Doc Tax: $0.00
DOR Admin Fee: $0.00
Intangible Tax: $0.00
Mortgage Stamp: $0.00
Phil Diamond, Comptroller
Orange County, FL
MB - Ret To: CITY OF APOPKA CITY CLERK

**PREPARED BY AND RETURN TO:**

City of Apopka
Attn. Joseph Byrd, Esq.
City Attorney
120 East Main Street
Apopka, Florida 32703

Orange County Parcel Id. No.(s) 21-20-28-0000-00-019 and 20-20-28-0000-00-022

# LAND DEVELOPMENT AGREEMENT FOR HAMRICK PROPERTY FUTURE LAND USE AMENDMENT – ORDINANCE NO. 2690

**THIS LAND DEVELOPMENT AGREEMENT** (the "Agreement") entered into and made as of the 15th day of April, 2019, by and between **PMDW VENTURES, LLC,** whose address is c/o Jason W. Searl, Esq., GrayRobinson, P.A., 301 East Pine Street, Suite 1400, Orlando, Florida 32801 (referred to as the "Developer"), joined by **CARROL M. HAMRICK** and **PATRICIA A. HAMRICK**, whose address is 51 West Oak Street, Apopka, Florida 32703 (referred to as the "Owner"), to consent to the recordation of this Agreement encumbering the Property (as defined below) as the owner thereof, and in favor of the **CITY OF APOPKA, FLORIDA**, 120 East Main Street, Apopka, Florida, 32703, Attn. Joseph Byrd, City Attorney (referred to as the "City").

## WITNESSETH

**WHEREAS**, the Owner and the Developer have applied for a Comprehensive Plan, Large Scale, Future Land Use Amendment, to the City for a Residential Very Low Suburban project lying within the municipal boundaries of the City and having the above-referenced Orange County Parcel Id. No.(s), which property is more particularly described on **EXHIBIT "A"** attached to and incorporated into this Agreement (referred to as the "Property" or "Project"); and

**WHEREAS**, the Developer will develop the Project pursuant to City Ordinance No. 2690 and in accordance with the terms and conditions set forth herein; and

**WHEREAS**, this Agreement is intended as mechanism to formalize those certain negotiated concessions by Developer for the Project; and

**WHEREAS**, this Agreement is not a statutory development agreement pursuant to Chapter 163, Florida Statutes (Florida Local Government Development Agreement Act), and is being entered into pursuant to the City's home rule authority as a condition of development approvals.

PH CMH

**NOW THEREFORE,** in consideration of the mutual promises and covenants herein contained, the City and the Developer (joined herein by Owner as the owner of the Property, in accordance with the terms of this Agreement) agree as follows:

**SECTION 1. RECITALS**

The above recitals are true and correct and form a material part of the Agreement.

**SECTION 2. NEGOTIATED CONCESSIONS BY DEVELOPER**

Developer (joined herein by Owner as the owner of the Property, in accordance with the terms of this Agreement), hereby agrees that the Project is subject to certain negotiated concessions agreed to by Developer, more particularly described as follows:

a. That the Project shall *not* provide any vehicular connection to Mt. Stirling Avenue for use by its Project residents.

b. There shall not be any setbacks for any residential single family homes to be constructed within the Project, *except* in accordance with the City's R-1AA Single Family Residential Zoning District requirements, and the Project, including, but not limited to, any landscaped bufferyard for the Project, shall adhere to all other requirements of the City's R-1AA Single Family Residential Zoning District for the Property. A separate landscape tract on the east side of the project adjacent to Rock Springs Ridge subdivision shall be a minimum of twenty five (25.0) feet and landscape in accordance with the City L.D.C. with trees and shrubs. As much as possible, the existing trees on the east side of the project adjacent to Rock Springs Ridge subdivision will be preserved and included as part of said landscape.

c. That it is the intent of the Developer that utilities connection points necessary for the development of the Project shall be as more particularly described on **EXHIBIT "B"** attached to and incorporated into this Agreement, to which the City hereby agrees and accepts any such utilities connection points along the Mt. Stirling Avenue side of the Project as sufficient and approved for the Property.

d. At the request of the City, the Developer may have to perform certain off-site improvements to Pittman Road, if necessary and as more particularly described on **EXHIBIT "C"** attached to and incorporated into this Agreement, to which the City hereby agrees and accepts that such cross-section, alignment and traffic control of Pittman Road is sufficient and approved for the Project. Such off-site improvements to Pittman Road may not have otherwise been necessary for the development of the Project had Developer not voluntarily agreed to the requirements of Subparagraph "a." of Section 2 of this Agreement above. Accordingly, the City agrees that any such off-site improvements to Pittman Road shall be undertaken within the existing right-of-way boundaries for Pittman Road and shall qualify for the City's impact fee credits. The City hereby agrees to acquire the ownership and maintenance obligations for Pittman Road once reconstruction has been completed and accepted by the City for primary access to the project and upon the Developer's execution and delivery of this Agreement.

Pf cnH

In addition to the requirements and obligations of Developer set forth herein, the operation and development of the Project shall be subject to, and in compliance with, the requirements of the City of Apopka Code of Ordinances not otherwise conflicting with the terms and conditions of this Agreement, including but not limited to, the conditions of any such development orders, approvals and permits issued by the City subsequent to the date of this Agreement, and the payment of all applicable impact fees at the amounts required by the City of Apopka Code of Ordinances.

## SECTION 3. AGREEMENT TO BE BINDING

This Agreement, together with any and all supplementary orders and resolutions, the approved preliminary development plan, and all final site plans for the Project, shall be binding upon Developer, joined by Owner as the owner of the Property, and their successors and assigns in title or interest. The provisions of this Agreement and all approved plans shall run with the Property and shall be administered in a manner consistent with Florida Statutes and local law.

## SECTION 4. ENFORCEMENT

This Agreement may be enforced by specific performance by any party hereto. In no event shall the City be liable for monetary damages arising out of or concerning this Agreement. In the event that enforcement of this Agreement by any party becomes necessary, and such party is successful in such enforcement, the other, applicable party(s) to this Agreement shall be jointly and severally responsible for all costs and expenses, including attorney's fees, whether or not litigation is necessary, and if necessary, both at trial and on appeal, incurred in enforcing or ensuring compliance with the terms and conditions of this Agreement.

## SECTION 5. GOVERNING LAW; VENUE

This Agreement shall be governed by and construed in accordance with the laws of the State of Florida. The exclusive venue for purpose of litigation in any action to construe or enforce the provisions of this Agreement shall be in a court of competent jurisdiction in and for Orange County, Florida.

## SECTION 6. EFFECTIVE DATE/RECORDING

This Agreement shall take effect upon that date following the City's adoption of the Comprehensive Plan, Large Scale, Future Land Use Amendment, for the Project (such final adoption by the City shall constitute the City's affirmative acceptance and approval of this Agreement) *and* the expiration of the applicable period within which any challenge to such amendment may be filed, *not* upon its execution and delivery by Developer, joined by Owner as the owner of the Property. The City may (but is not obligated to) record this Agreement in the Public Records of Orange County, Florida, to further confirm its acceptance of this Agreement. Notwithstanding the foregoing, the same shall not constitute any lien or encumbrance on title to the Property and shall instead constitute record notice of governmental regulations, which

PH cmH

regulates the use and enjoyment of the Property. This Agreement will be effective for thirty (30) years from the date it is effective.

## SECTION 7. TIME IS OF THE ESSENCE

Time is hereby declared of the essence as to the lawful performance of all duties and obligations set forth in this Agreement.

## SECTION 8. SEVERABILITY

If any part of this Agreement is found invalid or unenforceable in any court, such invalidity or unenforceability shall not affect the other parts of this Agreement, if the rights and obligations of the parties contained herein are not materially prejudiced and if the intentions of the parties can be affected. To that end, this Agreement is declared severable.

## SECTION 9. MISCELLANEOUS

a. Nothing contained in this Agreement nor in any instruments executed pursuant to the terms of this Agreement shall be construed as a waiver or attempted waiver by the City of its home rule authority, police power, zoning authority and sovereign immunity under the Constitution and laws of the State of Florida or any other privilege, immunity or defense afforded to the City or the City's officials, officers, employees and agents under the law.

b. This Agreement is entered into voluntarily by the Developer, with joinder by the Owner, without duress and after full review, evaluation and consideration by Developer and Owner. Developer and Owner are represented by counsel, or alternatively, has been afforded an opportunity to retain counsel for review of this Agreement.

c. The captions or section headings of this Agreement are provided for convenience only and shall not be deemed to explain, modify, amplify or aid in the interpretation, or meaning of this Agreement.

d. City and Developer, joined by Owner as the owner of the Property, are not partners and this Agreement is not a joint venture and nothing in this Agreement shall be construed to authorize Developer or Owner to represent or bind the City to matters not expressly authorized or provided in this Agreement.

e. None of the parties shall be considered the drafter of all or any portion of this Agreement for the purposes of interpreting all or any portion of this Agreement, it being recognized that all parties have contributed substantially and materially to the preparation of this Agreement.

**[SIGNATURE PAGES TO FOLLOW]**

AK cmH

**IN WITNESS WHEREOF**, the City and the Developer, joined by Owner to consent to the recordation of this Agreement encumbering the Property, have executed this Agreement as of the day and year first above written.

ATTEST:

**CITY:**
**CITY OF APOPKA, FLORIDA**

By: Bryan Nelson
Print Name: Bryan Nelson
As Its: Mayor
Date: 4-4-19

Linda F. Goff
Print Name: Linda F Goff
City Clerk

FOR THE USE AND RELIANCE
OF CITY OF APOPKA ONLY.
APPROVED AS TO FORM.

Joseph K. Byrd
Print Name: Joseph K. Byrd
City Attorney

**[SIGNATURE PAGE TO FOLLOW]**

PKH cmH

Witnesses:

**DEVELOPER:**
**PMDW VENTURES, LLC**

By: _____
Print Name: ROBERT N WALLEN
As Its: MANAGER
Date: 3/26/19

_____
Name: Audrey Grallinger

_____
Name: Stephanie Deyo

STATE OF Arizona
COUNTY OF Maricopa

The foregoing instrument was acknowledged before me this 26th day of March, 2019, by Robert N Wallen of **PMDW VENTURES, LLC**
. He (She) ☐ are personally known to me or ☒ has produced DL as identification.

(NOTARY SEAL)

_____
Notary Public Signature

Stephanie Deyo
(Name typed, printed or stamped)

OFFICIAL SEAL
STEPHANIE DEYO
NOTARY PUBLIC - State of Arizona
MARICOPA COUNTY
My Comm. Expires March 26, 2020

PH cmh

**[SIGNATURE PAGE TO FOLLOW]**



# 13311278 v4

PH CmH

Witnesses:

**OWNER**

Name: LAWRENCE R STEINER

Name: AMY R STEINER

Carrol M. Hamrick

Patricia A. Hamrick

STATE OF FL
COUNTY OF Seminole

The foregoing instrument was acknowledged before me this 15th day of April, 2019, by Carrol M. Hamrick. He (She) ☒ is personally known to me or ☐ has produced _____ as identification.

(NOTARY SEAL)

Notary Public Signature

LAWRENCE R. STEINER
MY COMMISSION # GG 096628
EXPIRES: May 31, 2021
Bonded Thru Notary Public Underwriters

(Name typed, printed or stamped)

STATE OF FL
COUNTY OF Seminole

The foregoing instrument was acknowledged before me this 15th day of April, 2019, by Patricia A. Hamrick. He (She) ☒ is personally known to me or ☐ has produced _____ as identification.

(NOTARY SEAL)

Notary Public Signature

LAWRENCE R. STEINER
MY COMMISSION # GG 096628
EXPIRES: May 31, 2021
Bonded Thru Notary Public Underwriters

(Name typed, printed or stamped)

PH LMH

**EXHIBIT "A"**
(Legal Description)

That certain real property commonly known as Orange County Parcel Id. No.(s) 21-20-28-0000-00-019 and 20-20-28-0000-00-022, more particularly described as:

SE1/4 of SE1/4 (LESS NW1/4 AND LESS W 30 FT FOR RD) OF SEC 20-20-28 AND W1/8 OF SW1/4 OF SW1/4 SECTION 21-20-28.

# EXHIBIT "B"
(Utilities Connection)

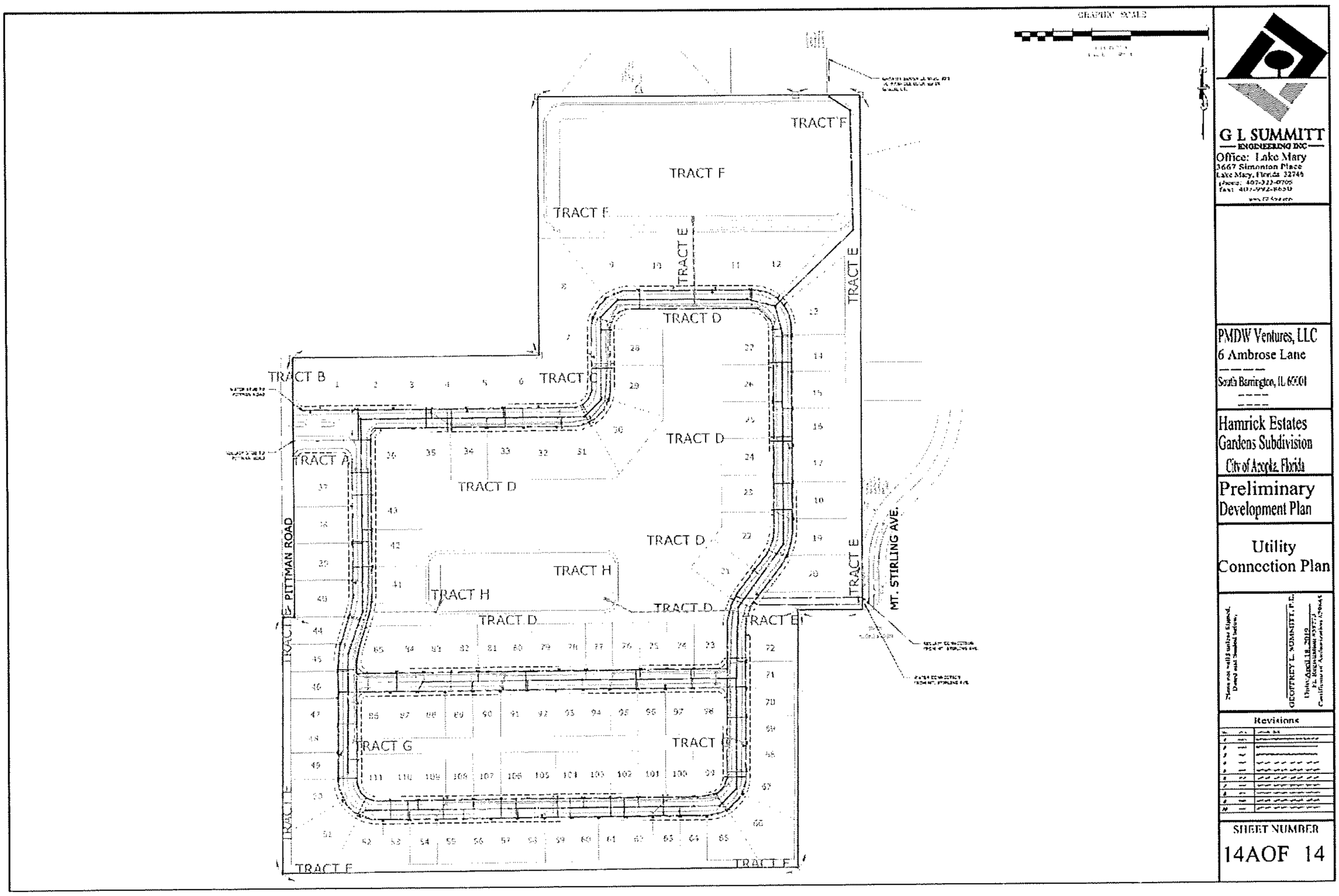




# 13311278 v4

# EXHIBIT "C"
(Pittman Road Cross-Section and Alignment)

## CROSS-SECTION

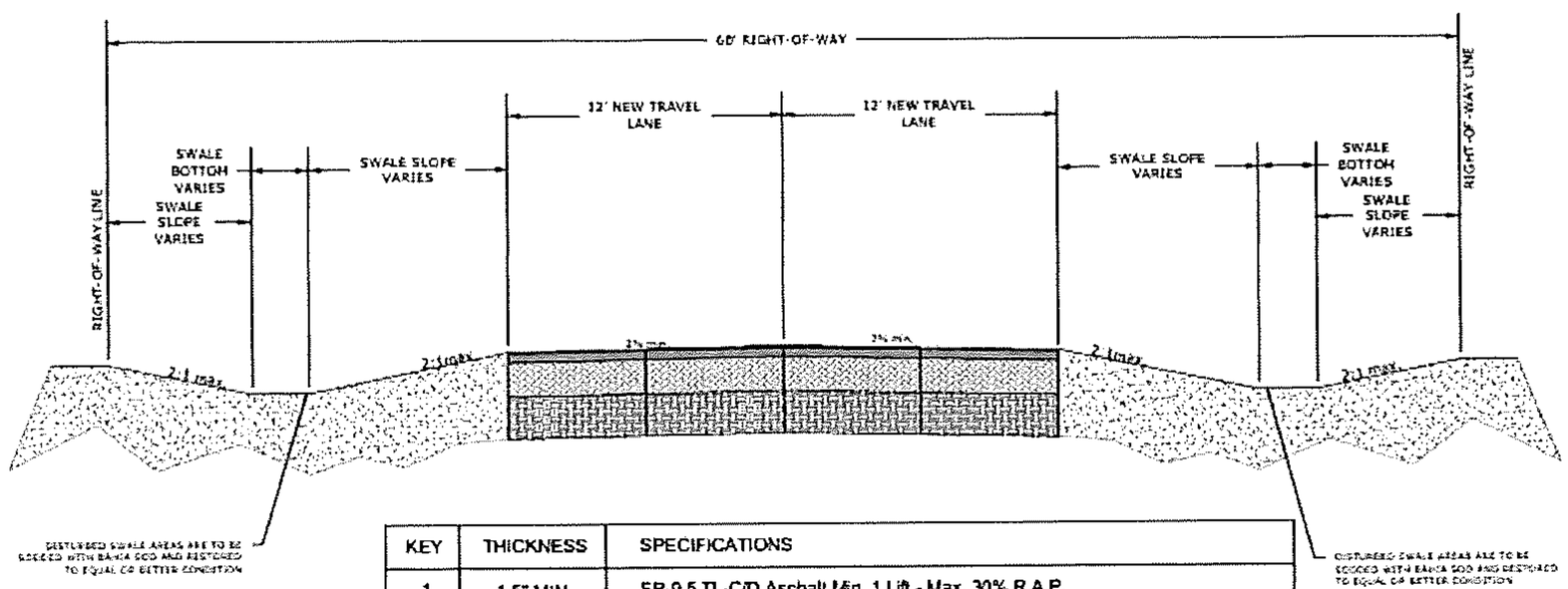


| KEY | THICKNESS | SPECIFICATIONS |
|---|---|---|
| 1 | 1.5" MIN. | SP-9.5 TL-C/D Asphalt Min. 1 Lift - Max. 30% R.A.P. |
| 2 | 8" | Limerock - 98% Min. Compaction, A.A.S.H.T.O. T-180, Prime and Sand 2 Lifts<br>Alt B-1: (Crushed Concrete Fines Min. LBR 160 & 98% Compaction per T-180) |
| 3 | 12" | Type B Stabilized Subgrade, 98% Min. Compaction, LBR 40 or FBV 75<br>Alt SG-1: (6" additional of Key Item #2 specified above) |
| 4 | 1" MIN. | FC-9.5 TL-C Asphalt Friction Course/Leveling Course 1 Lift Max. 20% R.A.P. |
| 5 | N/A | Earth / Soil |

103 / - PITTMAN ROAD LOCAL ACCESS CROSS SECTION
N.T.S.(DESIGN SPEED 20 MPH; POSTED 15 MPH)



# 13311278 v4

# EXHIBIT "C" CONTINUED
(Pittman Road Cross-Section and Alignment)

## ALIGNMENT

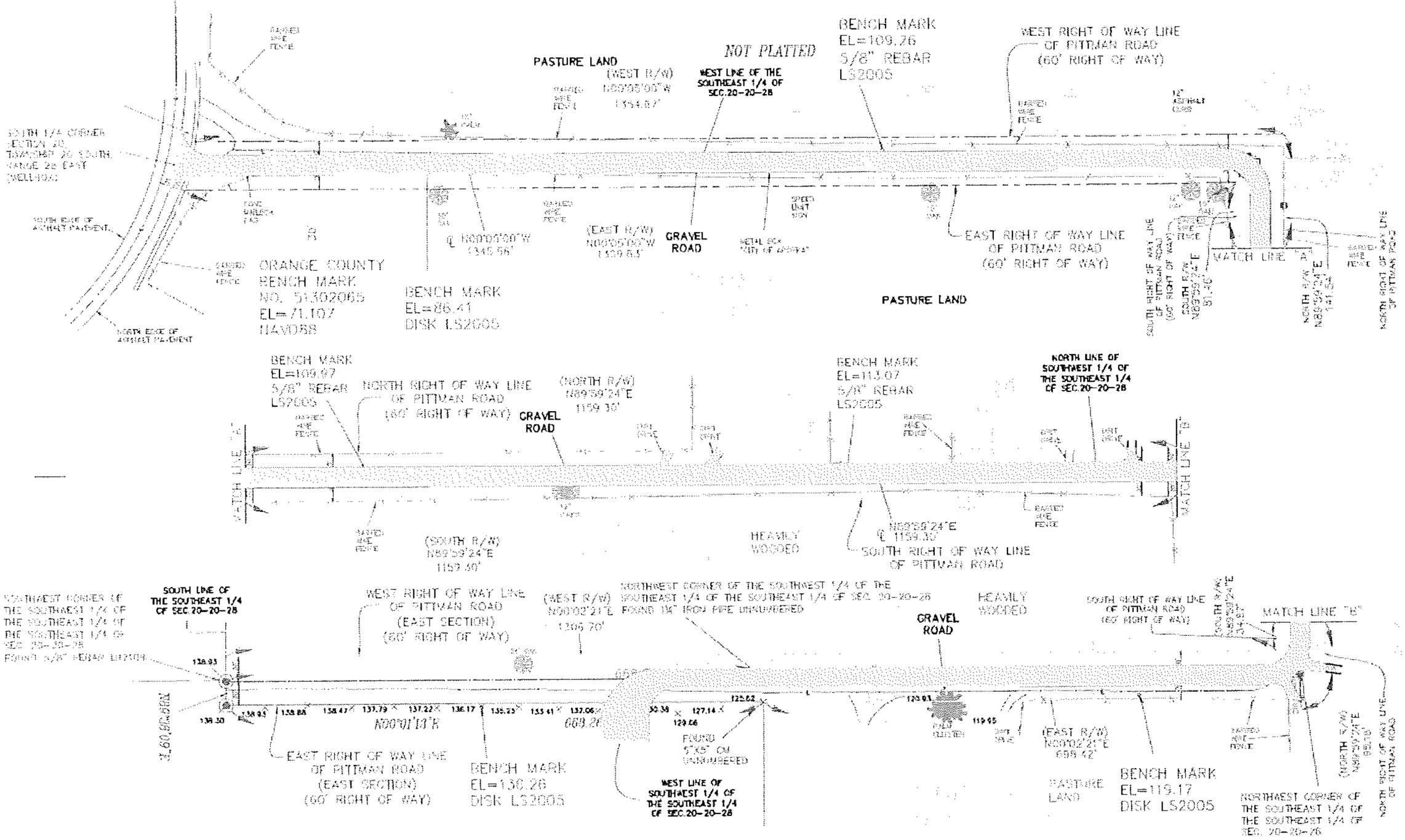




# 13311278 v4

GRAY | ROBINSON
ATTORNEYS AT LAW

301 EAST PINE STREET
SUITE 1400
POST OFFICE BOX 3068 (32802-3068)
ORLANDO, FLORIDA 32801
TEL 407-843-8880
FAX 407-244-5690

BOCA RATON
FORT LAUDERDALE
FORT MYERS
GAINESVILLE
JACKSONVILLE
KEY WEST
LAKELAND
MELBOURNE
MIAMI
NAPLES
ORLANDO
TALLAHASSEE
TAMPA
WEST PALM BEACH

Jason W. Searl

407-843-8880
JASON.SEARL@GRAY-ROBINSON.COM

April 1, 2019

**VIA FEDERAL EXPRESS AND EMAIL (JBYRD@APOPKA.NET)**

Joseph Byrd, Esquire
City Attorney
City of Apopka
120 East Main
Apopka, Florida 32703

Re: Land Development Agreement for Hamrick Property

Dear Mr. Byrd:

Enclosed herewith please find the original Land Development Agreement for Hamrick Property Future Land Use Amendment – Ordinance No. 2690 signed by PMDW Ventures, LLC.

Please do not hesitate to contact me should you have any questions.

Very truly yours,

Jason W. Searl

cc: PMDW Ventures, LLC (via email only)

# 13432112 v1